HC/49US (AT49) SMD LOW PROFILE CRYSTAL

11.5 x 4.7 x 4.2 mm

ABLS

RoHS Compliant

Moisture Sensitivity Level (MSL) – This product is Hermetically Sealed and not Moisture Sensitive - MSL = N/A: Not Applicable

FEATURES:

- Suitable for RoHS reflow
- Available for tight stability & extended temperature range

APPLICATIONS:

- Computers, Modems, Microprocessors
- Wireless Applications

STANDARD SPECIFICATIONS:

PARAMETERS	
ABRACON P/N	ABLS Series
Frequency	3.579545 MHz to 75 MHz
Operation Mode	AT cut (Fundamental or 3rd OT) or BT cut (See options) 3.579545MHz - 24.0MHz (Fundamental: Standard) 24.01MHz - 75.00MHz (3rd- Overtone: Standard) 24.01MHz - 50.00MHz (Fund. AT or BT: See options)
Operatin g Temperature	0°C to + 70°C (see options)
Storag e Temperatur e	- 55°C to + 125° C
Frequenc y Tolerance at +25°C	± 50 ppm max. (see options)
Frequency Stability over the Operating Temp. (Ref to +25°C)	± 50 ppm max. (see options)
Equivalen t Serie s Resistance	Se e Table 1
Shunt Capacitance C_0	7pF max .
Load Capacitance C_L	18pF (see options)
Drive Leve l	1 mW max., 100 µW typical
Aging at 25°C (first year)	± 5ppm max .
Insulation Resistance	500 MΩ min at 100Vdc ± 15V
Spurious Responses	-3dB max.
Drive level dependency (DLD)	from 1 µW to 500 µW (minimum 7 points tested)

TABLE 1: STANDARD ESR

FREQUENCY (MHz)	ESR (Ω) MAX
3.579 - 4.999 (Fund.)	180
5.000 - 5.999 (Fund.)	120
6.000 - 7.999 (Fund.)	100
8.000 - 8.999 (Fund.)	80
9.000 - 9.999 (Fund.)	60
10.000 - 15.999 (Fund.)	50
16.000 - 50.000 (Fund.)	40
24.01 - 31.999 (3rd O/T)	100
32.000 - 75.00 (3rd O/T)	80

OPTIONS & PART IDENTIFICATION:

(Left blank if standard)

ABLS - ☐ MHz - ☐ - R ☐ - ☐ - ☐ - ☐ - ☐ - ☐

Frequency in MHz
e.g. 3.579545 MHz
14.31818 MHz
26.000 MHz

Load Capacitance
Please specify CL (8 to 33pF) in pF or S for Series
Please contact ABRACON for other values

ESR if other than STD
Specify a value in Ω

Operating Temp.

A: -10°C ~ +60°C
B: -20°C ~ +70°C
C: -30°C ~ +70°C
N: -30°C ~ +85°C
D: -40°C ~ +85°C
J(***): -40°C to +105°C
K(***): -40°C to +125°C
L(***): -55°C to +125°C

Freq. Tolerance

H5: ± 5 ppm
1: ± 10 ppm
7: ± 15 ppm
2: ± 20 ppm
3: ± 25 ppm
4: ± 30 ppm

Freq. Stability

U: ± 10 ppm (*)
G: ± 15 ppm (**)
X: ± 20 ppm
W: ± 25 ppm
Y: ± 30 ppm
H: ± 35 ppm
Q: ± 100 ppm (****)
R: ± 150 ppm

Mode

F: Fund.AT for >24MHz
FB: Fund.BT for >24MHz

Packaging

Blank: Bulk
T: Tape & Reel (1k)
T2: Tape & Reel (250)

* -10 to +60° C only.
** Option A, B, and 0 to +70° C only.
*** Frequency stability ±50ppm, ±100ppm, or ±150ppm only.
Contact ABRACON for tighter frequency stability.
**** For Fundamental BT, frequency stability ± 100ppm max. at -10° C to +60° C only.

30332 Esperanza, Rancho Santa Margarita, California 92688
tel 949-546-8000 | fax 949-546-8001 | www.abracon.com

HC/49US (AT49) SMD LOW PROFILE CRYSTAL

ABLS

RoHS Compliant

11.5 x 4.7 x 4.2 mm

OUTLINE DRAWING:

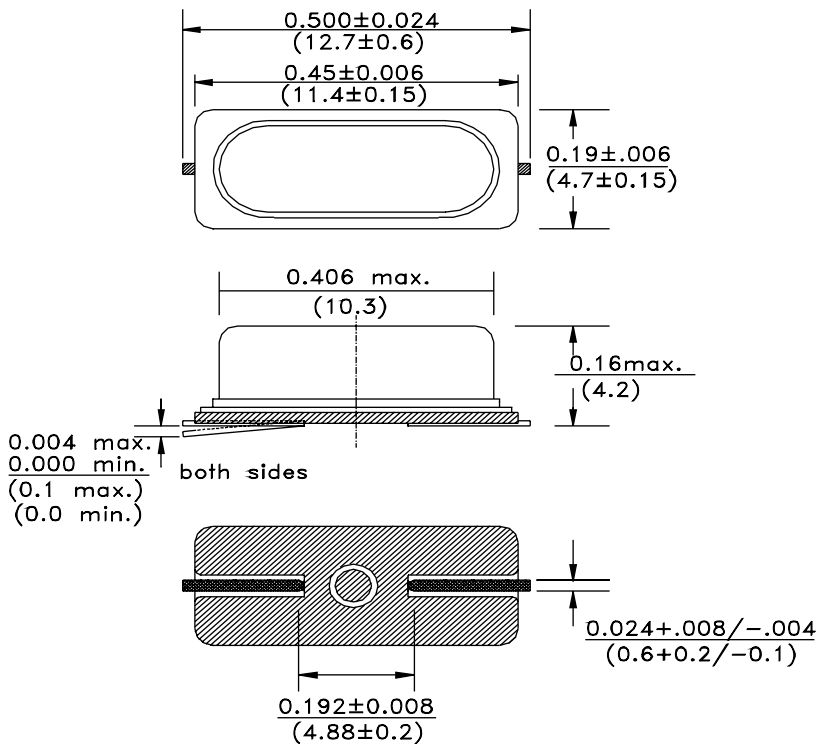

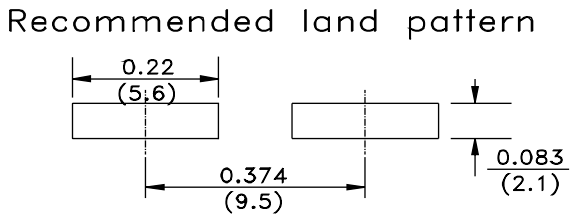

Dimensions: Inches (mm)

TAPE & REEL:

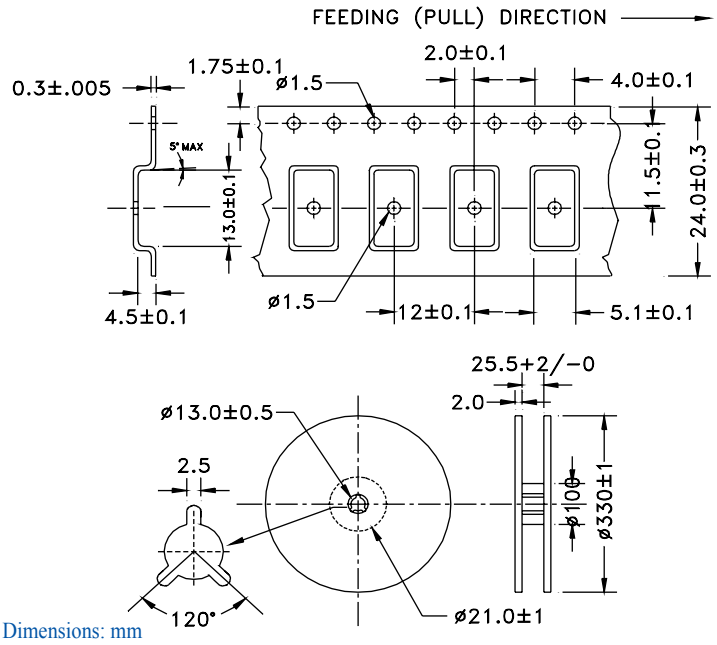

Dimensions: mm

REFLOW PROFILE:

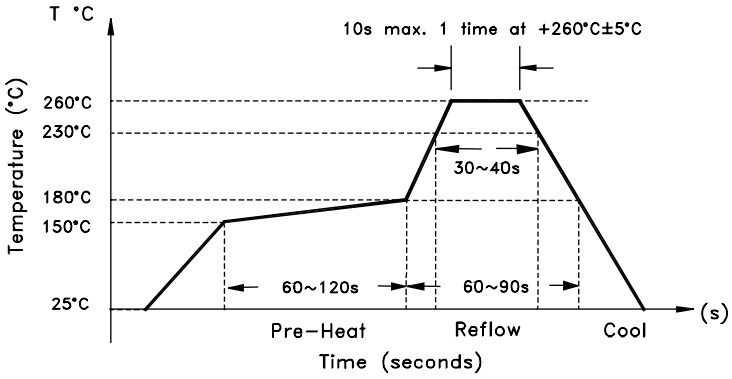

Need a test socket for the ABLS series? To view compatible PRECISION TEST & BURN-IN SOCKETS for these parts, click hereP/N: AXS-1147-02-02

ATTENTION: Abracon Corporation's products are COTS – Commercial-Off-The-Shelf products; suitable for Commercial, Industrial and, where designated, Automotive Applications. Abracon's products are not specifically designed for Military, Aviation, Aerospace, Life-dependant Medical applications or any application requiring high reliability where component failure could result in loss of life and/or property. For applications requiring high reliability and/or presenting an extreme operating environment, written consent and authorization from Abracon Corporation is required. Please contact Abracon Corporation for more information.

30332 Esperanza, Rancho Santa Margarita, California 92688
tel 949-546-8000 | fax 949-546-8001 | www.abracon.com