REV.	DATE	ECR NO.	DESCRIPTION
NC	05/22/03	–	INITIAL RELEASE
A	05/18/05	–	CORRECT PART NO. AND DESCRIPTION
B	10/24/06	–	ADD "75 ohm" TO DESCRIPTION
C	10/27/08	–	REVISE NOTE 1 TO .178" HEX CRIMP

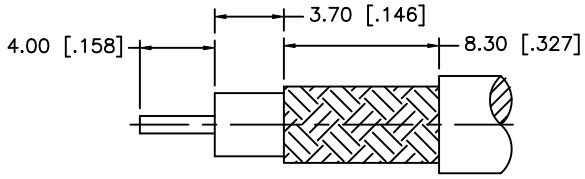

RECOMMENDED CABLE
STRIPPING DIM'S

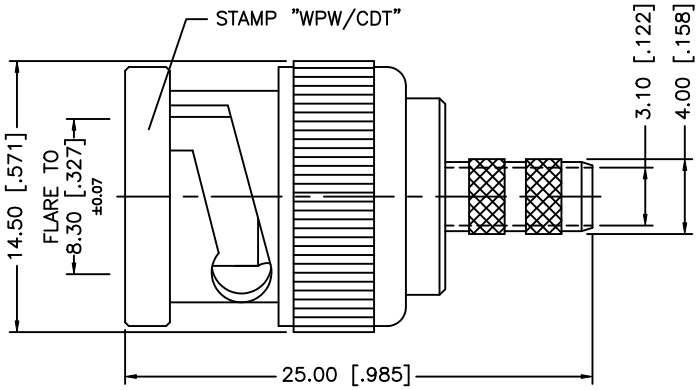

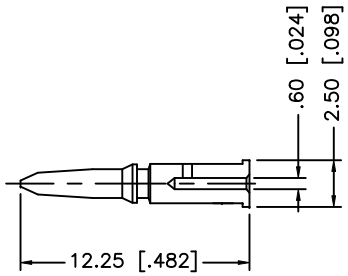

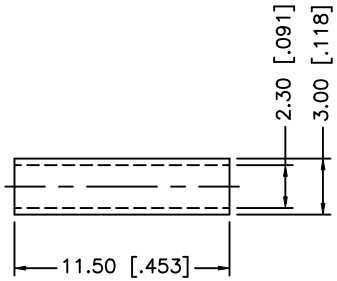

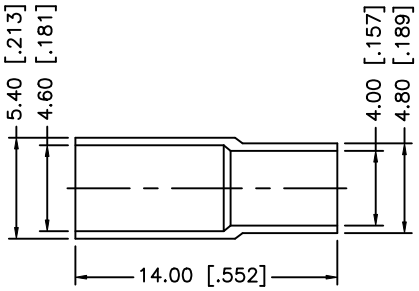

NOTES:

1. CRIMPED FERRULE HEX CRIMP SIZE .178" [4.52]
2. CRIMPED CONTACT PIN HEX CRIMP SIZE .068" [1.73]

	DESCRIPTION	MATERIAL	FINISH	QTY
8				
7				
6	FERRULE	COPPER	NICKEL	1
5	SLEEVE	DELRIN	NATURAL	1
4	GASKET	RUBBER	RED	1
3	CONTACT PIN	BRASS	GOLD	1
2	INSULATOR	PTFE	NATURAL	1
1	SHELL/BODY	BRASS	NICKEL	1

UNLESS OTHERWISE SPECIFIED DIMENSIONS ARE IN MILLIMETERS. DIMENSIONS IN [ ] ARE IN INCHES AND FOR CUSTOMER REFERANCE ONLY.

UNLESS OTHERWISE SPECIFIED TOLERANCES FOR MILLIMETERS ARE:
0.5 – 8mm ± 0.20mm
8 – 30mm ± 0.40mm
30 – 120mm ± 0.50mm

UNLESS OTHERWISE SPECIFIED TOLERANCES FOR INCHES ARE:
.020 – .315 = ± 0.007"
.315 – 1.180 = ± 0.015"
1.180 – 4.724 = ± 0.020"

DO NOT SCALE DRAWING

APPROVALS		DATE
DRAWN	GRS	10/27/08
CHECKED		
ISSUED		
SHEET	1 OF 1	

CAD FILE C:/112/112556.DWG

Amphenol Connex

PART DESCRIPTION
BNC CRIMP PLUG – 75ohm
(FOR B573945, MINI MAX 500 CABLE)

PART NO. 112556

DWG. NO. 112556.DWG | REV. C | SIZE A | SCALE NA