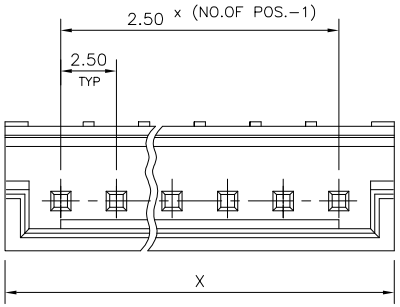

NOTE

MATERIAL:

1.HOUSING : PBT 15% GLASS FILLED UL94 V0 BLACK
THE HOUSING WILL WITHSTAND EXPOSURE TO 260-265°C FOR 3.5 SECONDS IN A WAVESOLDERING APPLICATION.

2.PIN : BRASS

PLATING :

③ 2 MICRON MIN SnPb OVER 1.27 MICRON MIN. NICKEL UNDER COAT (FOR LEADED VERSION)
2 MICRON MIN MATTE TIN OVER 1.27 MICRON MIN. NICKEL UNDER COAT(FOR LEAD FREE VERSION)

④ 0.5 MICRON MIN Au OVER 1.27 MICRON MIN. NICKEL.

⑤ 0.1 MICRON MIN Au OVER 1.27 MICRON MIN. NICKEL.

⑥ 0.3 MICRON MIN Au OVER 1.27 MICRON MIN. NICKEL.

7. POLARIZED HEADER SPECIFIED POSITION DOSE NOT HAVE PIN AS SHOWN

* 67094-097 .....4TH FROM RIGHT

* 67094-098 .....2ND FROM RIGHT

LEFT RIGHT

8. OPERATING TEMPERATURE : -25°C TO +85°C
9. MECHANICAL PERFORMANCE
DURABILITY (MATING CYCLES)
GOLD : 50
TIN-LEAD : 20
CONTACT RETENTION - 1.5 KG
10. ELECTRICAL PERFORMANCE
WITHSTANDING VOLTAGE : 750 V
INSULATION RESISTANCE : 500M Ωmin
CURRENT RATING : 2 amp DC
CONTACT RESISTANCE : 20m Ωmax

PART NUMBER	POS.	DIMN. X	PLATING
67094-098 / 67094-098LF	18	47.5	③
67094-097 / 67094-097LF	14	37.5	
67094-096 / 67094-096LF	8	22.5	
67094-095 / 67094-095LF	20	52.5	⑥
67094-094 / 67094-094LF	19	50.0	
67094-093 / 67094-093LF	18	47.5	
67094-092 / 67094-092LF	17	45.0	
67094-091 / 67094-091LF	16	42.5	
67094-090 / 67094-090LF	15	40.0	

PART NUMBER	POS.	DIMN. X	PLATING
67094-089 / 67094-089LF	14	37.5	⑥
67094-088 / 67094-088LF	13	35.0	
67094-087 / 67094-087LF	12	32.5	
67094-086 / 67094-086LF	11	30.0	
67094-085 / 67094-085LF	10	27.5	
67094-084 / 67094-084LF	9	25.0	
67094-083 / 67094-083LF	8	22.5	
67094-082 / 67094-082LF	7	20.0	
67094-081 / 67094-081LF	6	17.5	
67094-080 / 67094-080LF	5	15.0	
67094-079 / 67094-079LF	4	12.5	
67094-078 / 67094-078LF	3	10.0	
67094-077 / 67094-077LF	2	7.5	
67094-076 / 67094-076LF	20	52.5	④
67094-075 / 67094-075LF	19	50.0	
67094-074 / 67094-074LF	18	47.5	
67094-073 / 67094-073LF	17	45.0	
67094-072 / 67094-072LF	16	42.5	
67094-071 / 67094-071LF	15	40.0	
67094-070 / 67094-070LF	14	37.5	
67094-069 / 67094-069LF	13	35.0	
67094-068 / 67094-068LF	12	32.5	
67094-067 / 67094-067LF	11	30.0	
67094-066 / 67094-066LF	9	25.0	
67094-065 / 67094-065LF	7	20.0	
67094-064 / 67094-064LF	6	17.5	

PART NUMBER	POS.	DIMN. X	PLATING
67094-063 / 67094-063LF	5	15.0	④
67094-062 / 67094-062LF	6	17.5	⑤
67094-061 / 67094-061LF	10	27.5	④
67094-060 / 67094-060LF	8	22.5	
67094-059 / 67094-059LF	4	12.5	
67094-058 / 67094-058LF	3	10.0	
67094-057 / 67094-057LF	2	7.5	
67094-020 / 67094-020LF	20	52.5	③
67094-019 / 67094-019LF	19	50.0	
67094-018 / 67094-018LF	18	47.5	
67094-017 / 67094-017LF	17	45.0	
67094-016 / 67094-016LF	16	42.5	
67094-015 / 67094-015LF	15	40.0	
67094-014 / 67094-014LF	14	37.5	
67094-013 / 67094-013LF	13	35.0	
67094-012 / 67094-012LF	12	32.5	
67094-011 / 67094-011LF	11	30.0	
67094-010 / 67094-010LF	10	27.5	
67094-009 / 67094-009LF	9	25.0	
67094-008 / 67094-008LF	8	22.5	
67094-007 / 67094-007LF	7	20.0	
67094-006 / 67094-006LF	6	17.5	
67094-005 / 67094-005LF	5	15.0	
67094-004 / 67094-004LF	4	12.5	
67094-003 / 67094-003LF	3	10.0	
67094-002 / 67094-002LF	2	7.5	

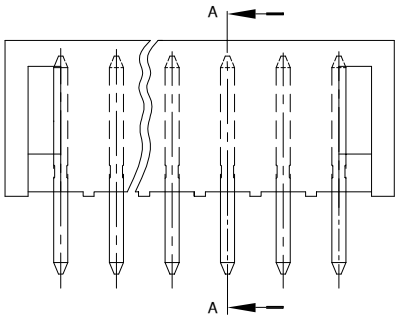

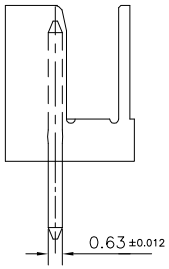

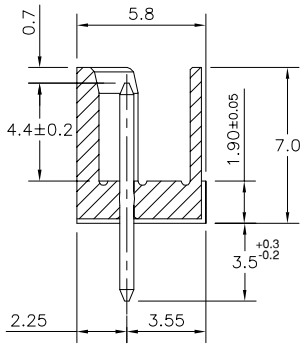

SECTION-AA

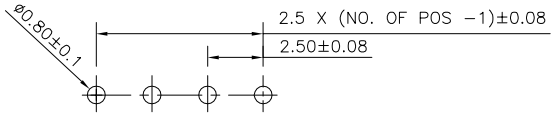

RECOMMENDED PCB LAYOUT

1.LF Products meet European Union Directives and other country Regulations as described in GS−22−008.

2.The Housing will withstand exposure to 260° peak temperature for 3.5 sec in a wave solder application with a 1.6mm Min thick circuitboard.

3.Lead Free or ROHS Directive labelling to be provided as per GS−14−920 for Lead Free version.

ltr	ecn no	dr	date
P	I06-0123	HVN	2006-07-20
R	I07-0039	HVN	2007-03-16

mat'l. code –

surface ISO 1302

tolerance ISO 406 ISO 1101

tolerances unless otherwise specified

angles 0°±2° linear ±0.13

projection

MM

scale 5:1

dr	MINI K VANDANATH	2003-04-14
engr	Hiran V N	2003-04-14
chr	HIRAN V N	2007-03-16
appd	HIRAN V N	2007-03-16

product family RELIMATE

title RELIMATE HEADER VERTICAL

dwg no 67094

sheet 1 of 1

size A3

type Product Customer Drawing

sheet index	revision	R
	sheet	1

FCIconnect.com
Copyright FCI

form: A3

PDM: Rev:R STATUS:Released Printed: Mar 16, 2009