PRODUCT NO
67231-001

REVISIONS			
REV	DESCRIPTION	BY	DATE
A	APPROVED	HAA	12/8/84
B	REDRAW TO STANDARD COLOR, BLACK WAS BLUE	HAA	6/82
C	REDRAW FROM IGES ADD STAND OFFS.	JGS	11/13/89

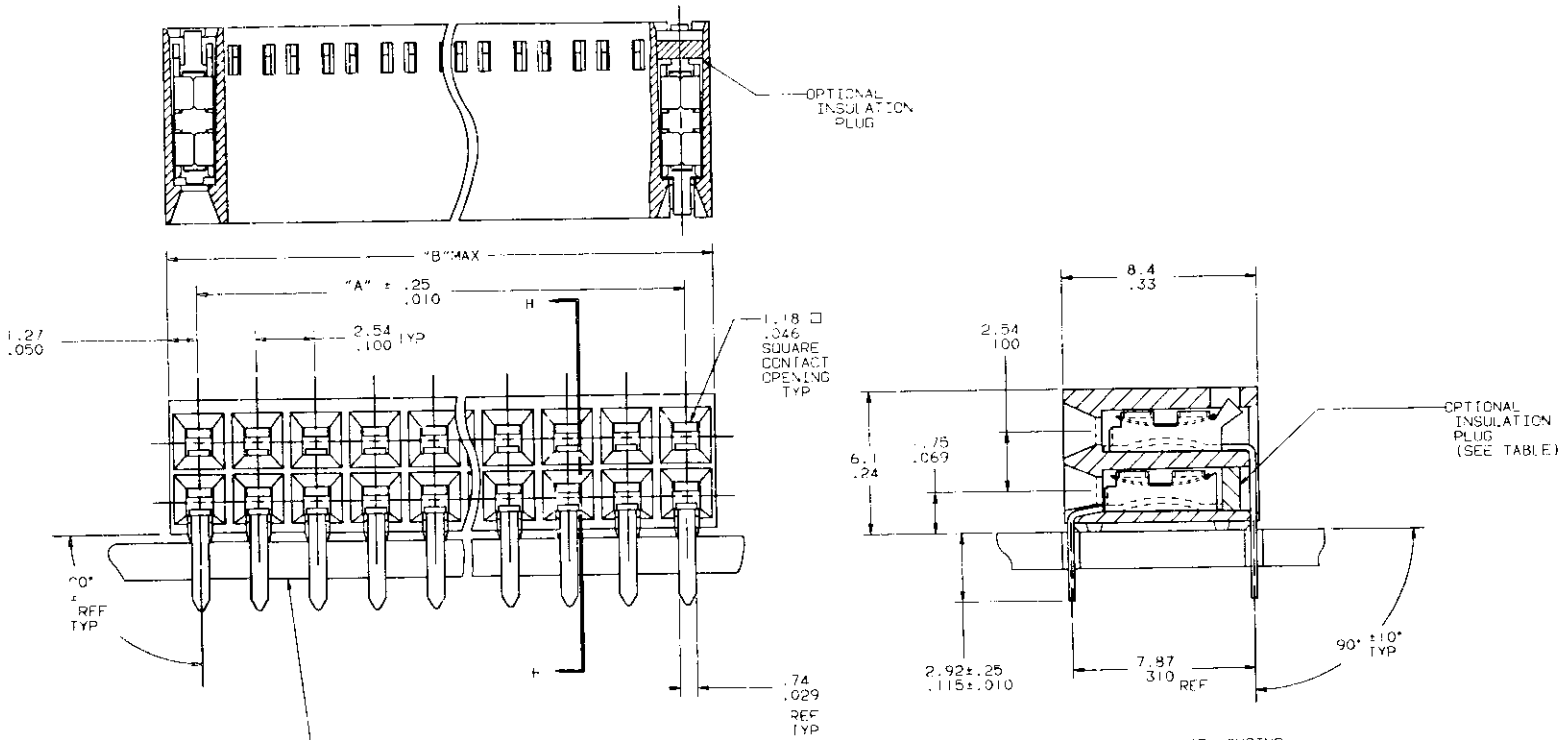

SHEET INDEX	ISSUE	C	C	C	C				
	SH NO	1	2	3	4				

MODEL: XXXX

DO NOT SCALE DRAWING

THIRD ANGLE PROJECTION

TABULATION SHEETS REQUIRED: REV / NO

UNITS: INCH

TOLERANCE UNLESS OTHERWISE NOTED: MM/INCH
LINEAR: 0.0±0.25/.00±.01; 0.00±0.13/.00U±.005; 0.000±0.05/.0000±.0020
ANGLES ±2°

MAT'L: XXXXXX
FINISH: XXXXXX

DR: J. SHREINER
CHK: XXXX
ENGR: M. HAHN
APPD: M. HAHN
DATE: 11/9/89

CUSTOMER COPY
CODE IDENT: 32526

DuPont Electronics

TITLE: 2X .100 CARD CONNECTOR

SCALE: XXX | SIZE: D | DWG NO: 67231 | CAD | SHEET 1 OF 4

NOTE: This print is the property of and contains proprietary designs of THE DUPONT COMPANY. No part of the design shown on this print may be used or reproduced without the express consent of DUPONT ELECTRONICS, New Castle, Del., PA.

PRODUCT NO	NO. OF POS.	A ± .25/.010	B MAX	INSULATION PLUG
67231-001	2X	0/.000	2.54/.100	NO
-002	2X2	2.54/.100	5.08/.200	
-003	2X3	5.08/.200	7.62/.300	
-004	2X4	7.62/.300	10.16/.400	
-005	2X5	10.16/.400	12.70/.500	
-006	2X6	12.70/.500	15.24/.600	
-007	2X7	15.24/.600	17.78/.700	
-008	2X8	17.78/.700	20.32/.800	
-009	2X9	20.32/.800	22.86/.900	
-010	2X10	22.86/.900	25.40/1.000	
-011	2X11	25.40/1.000	27.94/1.100	
-012	2X12	27.94/1.100	30.48/1.200	
-013	2X13	30.48/1.200	33.02/1.300	
-014	2X14	33.02/1.300	35.56/1.400	
-015	2X15	35.56/1.400	38.10/1.500	
-016	2X16	38.10/1.500	40.64/1.600	
-017	2X17	40.64/1.600	43.18/1.700	
-018	2X18	43.18/1.700	45.72/1.800	
-019	2X19	45.72/1.800	48.26/1.900	
-020	2X20	48.26/1.900	50.80/2.000	
-021	2X21	50.80/2.000	53.34/2.100	
-022	2X22	53.34/2.100	55.88/2.200	
-023	2X23	55.88/2.200	58.42/2.300	
-024	2X24	58.42/2.300	60.96/2.400	
-025	2X25	60.96/2.400	63.50/2.500	
-026	2X26	63.50/2.500	66.04/2.600	
-027	2X27	66.04/2.600	68.58/2.700	
-028	2X28	68.58/2.700	71.12/2.800	
-029	2X29	71.12/2.800	73.66/2.900	
-030	2X30	73.66/2.900	76.20/3.000	
-031	2X31	76.20/3.000	78.74/3.100	
-032	2X32	78.74/3.100	81.28/3.200	
-033	2X33	81.28/3.200	83.82/3.300	
-034	2X34	83.82/3.300	86.36/3.400	
-035	2X35	86.36/3.400	88.90/3.500	
-036	2X36	88.90/3.500	91.44/3.600	
-037	2X37	91.44/3.600	93.98/3.700	
-038	2X38	93.98/3.700	96.52/3.800	
-039	2X39	96.52/3.800	99.06/3.900	
67231-040	2X40	99.06/3.900	101.60/4.000	NO

PRODUCT NO.	NO. OF POS.	A ±.25/.010	B MAX	INSULATION PLUG
67231-041	2X41	101.64/4.000	104.14/4.100	NO
-042	2X42	104.14/4.100	106.68/4.200	
-043	2X43	106.68/4.200	109.22/4.300	
-044	2X44	109.22/4.300	111.76/4.400	
-045	2X45	111.76/4.400	114.30/4.500	
-046	2X46	114.30/4.500	116.84/4.600	
-047	2X47	116.84/4.600	119.38/4.700	
-048	2X48	119.38/4.700	121.92/4.800	
-049	2X49	121.92/4.800	124.46/4.900	
-050	2X50	124.46/4.900	127.00/5.000	
-051	2X51	127.00/5.000	129.54/5.100	
-052	2X52	129.54/5.100	132.08/5.200	
-053	2X53	132.08/5.200	134.62/5.300	
-054	2X54	134.62/5.300	137.16/5.400	
-055	2X55	137.16/5.400	139.70/5.500	
-056	2X56	139.70/5.500	142.24/5.600	
-057	2X57	142.24/5.600	144.78/5.700	
-058	2X58	144.78/5.700	147.32/5.800	
-059	2X59	147.32/5.800	149.86/5.900	
-060	2X60	149.86/5.900	152.40/6.000	
-061	2X61	152.40/6.000	154.94/6.100	
-062	2X62	154.94/6.100	157.48/6.200	
-063	2X63	157.48/6.200	160.02/6.300	
-064	2X64	160.02/6.300	162.56/6.400	
67231-065	2X65	162.56/6.400	165.10/6.500	NO

REVISIONS			
REV	DESCRIPTION	BY	DATE
C			

SHEET INDEX | ISSUE | SH NO

MODEL XXXX

DO NOT SCALE DRAWING

TABULATION SHEETS REQUIRED Yes No

TOLERANCE UNLESS OTHERWISE NOTED MM/INCH
LINEAR 0.0±0.25/.00±.01
0.00±0.37/.000±.005
0.000±0.05/.0000±.0020
ANGLES ±2°

MAT. XXXXXX

FINISH XXXXXX

DR. J. SHREINER DATE 12/4/89
CHK XXXX XXX
ENGR M. HAHN
APPD M. HAHN

CUSTOMER COPY

CODE IDENT 22526

DuPont Electronics

TITLE 2X .100 CARD CONNECTOR

SCALE XXX SIZE D CAD NO 67231 SHEET 2

NOTE: This drawing is the property of and contains proprietary data of THE DUPONT COMPANY. No part of the design shown on this drawing may be reproduced or used without the express consent of DUPONT ELECTRONICS, New Cumberland, PA.

PDM: Rev:C STATUS:Released Printed: Oct 03, 2006

PRODUCT NO	NO. OF POS.	A ± .25/.010	B MAX.	INSULATION PLUG
67231-501	2X1	0/.000	2.54/.100	YES
-502	2X2	2.54/.100	5.08/.200	
-503	2X3	5.08/.200	7.62/.300	
-504	2X4	7.62/.300	10.16/.400	
-505	2X5	10.16/.400	12.70/.500	
-506	2X6	12.70/.500	15.24/.600	
-507	2X7	15.24/.600	17.78/.700	
-508	2X8	17.78/.700	20.32/.800	
-509	2X9	20.32/.800	22.86/.900	
-510	2X10	22.86/.900	25.40/1.000	
-511	2X11	25.40/1.000	27.94/1.100	
-512	2X12	27.94/1.100	30.48/1.200	
-513	2X13	30.48/1.200	33.02/1.300	
-514	2X14	33.02/1.300	35.56/1.400	
-515	2X15	35.56/1.400	38.10/1.500	
-516	2X16	38.10/1.500	40.64/1.600	
-517	2X17	40.64/1.600	43.18/1.700	
-518	2X18	43.18/1.700	45.72/1.800	
-519	2X19	45.72/1.800	48.26/1.900	
-520	2X20	48.26/1.900	50.80/2.000	
-521	2X21	50.80/2.000	53.34/2.100	
-522	2X22	53.34/2.100	55.88/2.200	
-523	2X23	55.88/2.200	58.42/2.300	
-524	2X24	58.42/2.300	60.96/2.400	
-525	2X25	60.96/2.400	63.50/2.500	
-526	2X26	63.50/2.500	66.04/2.600	
-527	2X27	66.04/2.600	68.58/2.700	
-528	2X28	68.58/2.700	71.12/2.800	
-529	2X29	71.12/2.800	73.66/2.900	
-530	2X30	73.66/2.900	76.20/3.000	
-531	2X31	76.20/3.000	78.74/3.100	
-532	2X32	78.74/3.100	81.28/3.200	
-533	2X33	81.28/3.200	83.82/3.300	
-534	2X34	83.82/3.300	86.36/3.400	
-535	2X35	86.36/3.400	88.90/3.500	
536	2X36	88.90/3.500	91.44/3.600	
-537	2X37	91.44.3.600	93.98/3.700	
-538	2X38	93.98/3.700	96.52/3.800	
-539	2X39	96.52/3.800	99.06/3.900	
-540	2X40	99.06/3.900	101.60/4.000	
-541	2X41	101.60/4.000	104.14/4.100	
-542	2X42	104.14/4.100	106.68/4.200	YES

PRODUCT NO.	NO. OF POS.	A ± .25/.010	B MAX	INSULATION PLUG
67231-543	2X43	106.68/4.200	109.22/4.300	YES
-544	2X44	109.22/4.300	111.76/4.400	
545	2X45	111.76/4.400	114.30/4.500	
-546	2X46	114.30/4.500	116.84/4.600	
-547	2X47	116.84/4.600	119.38/4.700	
548	2X48	119.38/4.700	121.92/4.800	
-549	2X49	121.92/4.800	124.46/4.900	
-550	2X50	124.46/4.900	127.00/5.000	
551	2X51	127.00/5.000	129.54/5.100	
-552	2X52	129.54/5.100	132.08/5.200	
-553	2X53	132.08/5.200	134.62/5.300	
554	2X54	134.62/5.300	137.16/5.400	
-555	2X55	137.16/5.400	139.70/5.500	
-556	2X56	139.70/5.500	142.24/5.600	
-557	2X57	142.24/5.600	144.78/5.700	
558	2X58	144.78/5.700	147.32/5.800	
-559	2X59	147.32/5.800	149.86/5.900	
560	2X60	149.86/5.900	152.40/6.000	
-561	2X61	152.40/6.000	154.94/6.100	
-562	2X62	154.94/6.100	157.48/6.200	
-563	2X63	157.48/6.200	160.02/6.300	
-564	2X64	160.02/6.300	162.56/6.400	
67231-565	2X65	162.56/6.400	165.10/6.500	YES

REVISIONS

REV	DESCRIPTION	BY	DATE
C			

CUSTOMER COPY

CODE IDENT 22526

DuPont Electronics

SHEET INDEX | ISSUE | SH NO | 1

MODEL XXXX

DO NOT SCALE DRAWING

THIRD ANGLE PROJECTION

FABRICATION SAFETY REQUIRED YES NO

MM INCH

TOLERANCE UNLESS OTHERWISE NOTED MM/INCH

LINEAR 0.0±0.25/.001±.01 | 0.00±0.13/.000±.005 | 0.000±0.05/.0000±.0020

ANGLE ±5°±2°

MATL XXXXXX

FINISH XXXXXX

DR J. SCHREINER

CHK XXXX

SNCP M. HAHN

APPD M. HAHN

DATE 1/2/93 | XXX | 1/2/93

TITLE 2X .100 CARD CONNECTOR

SCALE XXX | SIZE 0 | DWG NO 67231 | CAD | SHEET 3

NOTE: This action is the property of and embodies proprietary designs of the DUPONT COMPANY. No part of the design shown on this drawing may be used or copied without the express of DUPONT ELECTRONICS, New Cumberland, PA

PRODUCT NO
XXXXXXXX

REVISIONS			
REV	DESCRIPTION	BY	DATE
C			

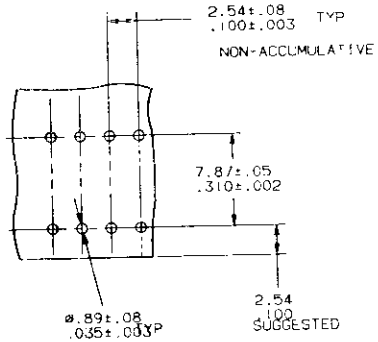

FIGURE 1
SCALE 5/1

NOTES

1. HOUSING MATERIAL.
   30% GLASS-FILLED THERMOPLASTIC POLYESTER PER UL 94V-0. COLOR BLACK.

2. TERMINAL MATERIAL.
   BODY. 1/2 HARD BRASS. ALLOY C26000 .25/.010 THICK.
   SPRING. BE-CU. ALLOY C17200 HEAT TREATED
   BODY PLATING.
   1.02 MICRON /40 MICROINCH GOLD OVER 1.27/ MICRON/50 MICROINCH NICKEL ON ENTIRE BODY.
   0.25 MICRON/10 MICROINCH POSTPLATED GOLD FLASH OVER 1.27 MICRON/50 MICROINCH. NICKEL ON REMAINDER.
   SPRING PLATING. GOLD FLASH.

3. APPLICATION INFORMATION.
   A. RECOMMENDED MOUNTING HOLE PATTERN IS SHOWN IN FIGURE #A.
   B. ALL MATING PINS TO BE .64/.025 SQUARE ON TRUE CENTER OF GIVEN TERMINAL SPACINGS WITHIN .38/.015 DIA.
   C. SUGGESTED MATING PIN LENGTH 8.89±.51/.350±.020.

SHEET INDEX	ISSUE / SH NO 1					CUSTOMER COPY	DuPont Electronics
MODEL XXXX	DO NOT SCALE DRAWING	TOLERANCE UNLESS OTHERWISE NOTED MM/INCH	MATL XXXXXX	DR J. SHREINER		CODE IDENT 22526	
	THIRD ANGLE PROJECTION	LINEAR 0.0±0.25/.00±.01; 0.00±0.13/.000±.005; 0.000±0.05/.0000±.0020	FINISH XXXXXX	CHK XXXX		DATE 6/24/99	TITLE 2X .100 CARD CONNECTOR
				ENGR M.HAHN		XXX	
TABULATION SHEETS REQUIRED YES / NO	MM / INCH	ANGLES ±2°		APPD M.HAHN		SCALE 1X1 SIZE D DWG NO 67231	CAD SHEET 4

NOTE: This print is the property of and contains proprietary designs of THE DUPONT COMPANY. No part of the design shown on this print is to be used in any way without the written consent of DUPONT ELECTRONICS, New Castle, Del., PA.