PRODUCT NUMBER	PLATING CONTACT AREA	UNDER PLATING
72636-302	1,3 m Au min	1,3 m Ni min

PCB LAYOUT:

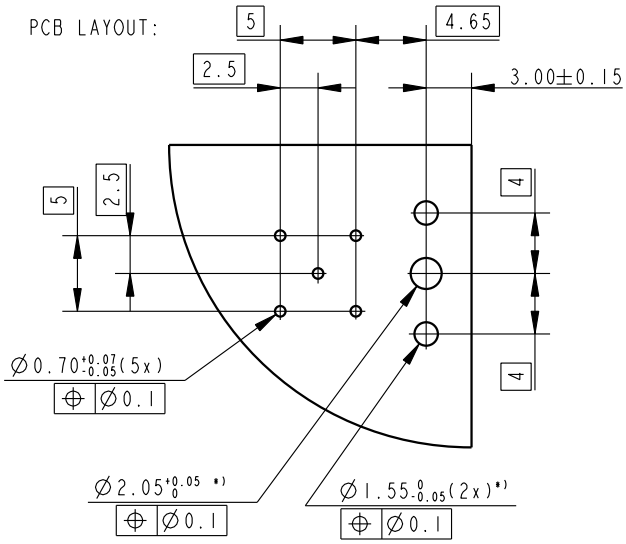

*) unplated holes

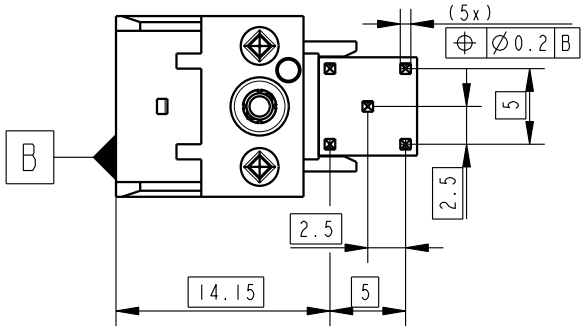

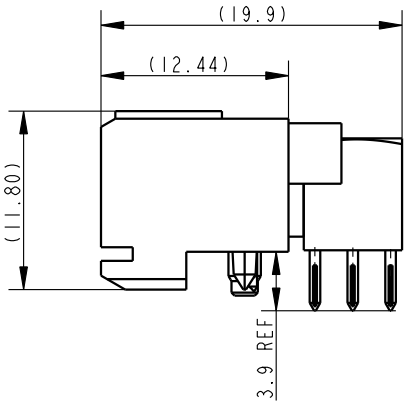

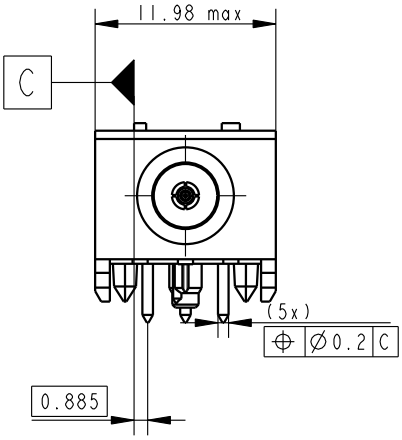

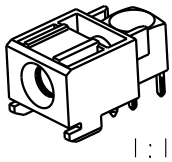

1:1

NOTES:
1 BODY MATL: LIQUID CRYSTAL POLYMER 30% GLASS
FLAME RETARDENT AC. UL 94-V0
2 PF CONTACT MATL:
BODY: BRASS
CONTACT SPRING: CuBe
CLIP: CuBe
CENTER CONTACT: BRASS
TERMINATION: TINBRONZE

ltr	ecn no	dr	date
C	B20112	GNY	020630
-	-	-	-
-	-	-	-
-	-	-	-
-	-	-	-
-	-	-	-
-	-	-	-

PRESS-FIT HOLES	OPTION
HOLE DIAMETER AFTER PLATING	0.65-0.77
DRILLED HOLE	0.78-0.83
COPPER PLATING	0.025-0.050
TIN PLATING	0.005-0.015

CONVERSION ACCORDING GS-STANDARDS

FCI www.fciconnect.com

surface - ISO 1302 | tolerance ISO 406 ISO 1101 | projection | mm

Dr	G.Nys	30/06/02	Product family	SOFIX	size A4 / Scale 2:1
Eng	G.Nys	30/06/02	Spec ref	-	
Chr	W.Panis	30/06/02	Material	SEE NOTES	ECN B20112
Appr	W.Panis	30/06/02			

title: Coaxial connector right angled

dwg no: 72636_C

Rev. C

catalog no 72636-XYY | CUSTOMER COPY | sheet 1 of 1

Tous droits strictement reserves. Reproduction ou communication a des tiers interdite sous quelque forme que ce soit sans autorisation ecrite du propietaire. Propriete de c FCI. Droits de reproduction FCI.

All rights strictly reserved. Reproduction or issue to third parties in any form whatever is not permitted without written authority from the proprietor. Property of FCI. Copyright FCI.

PDM: Rev:C STATUS: Released Printed: May 19, 2011