Tous droits strictement reserves. Reproduction ou communication a des tiers interdite sous quelque forme que ce soit sans autorisation ecrite du propietaire. Propriete de c FCI. Droits de reproduction FCI.

All rights strictly reserved. Reproduction or issue to third parties in any form whatever is not permitted without written authority from the proprietor. Property of FCI. Copyright FCI.

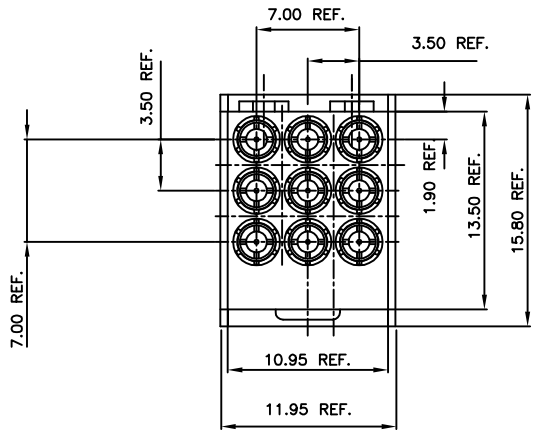


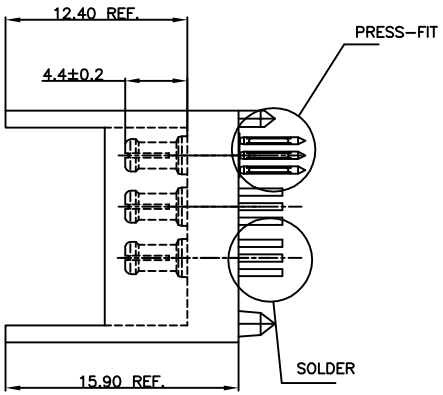


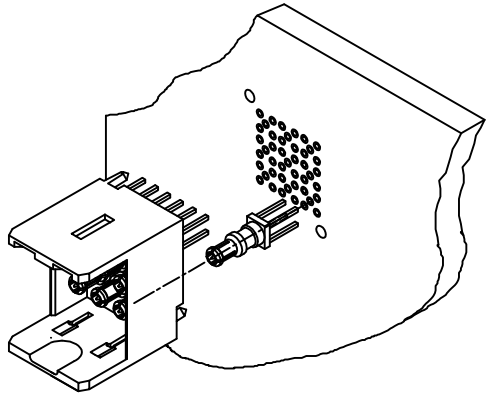

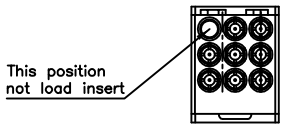


Draft AA
Only for 88993–305LF

These hole are required when a shroud is used

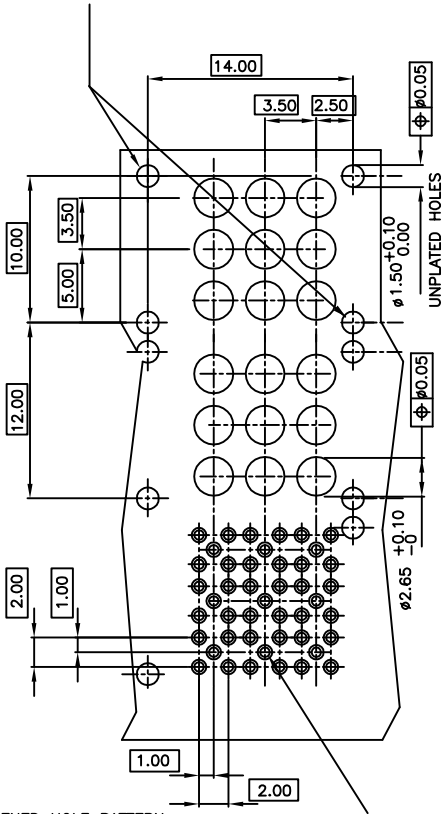


RECOMMENED HOLE PATTERN
COMPONENT SIDE

NOTES:

1. Press–Fit Insert are assembled to the borad first and then the housing is clip onto inserts. Solder Insert are clip in the housing and the hole assembly is then place on the board for soldering.
2. 88993–309LF has Pre–Assembled Inserts in housing.
3. 88993–302LF has Pre–Assembled Inserts in housing.
4. 88993–304LF has Pre–Assembled Inserts in Housing. 4coax per housing, one in each corner. The coax is nono–magnetic version.
5. 88993–305LF has Pre–Assembled Inserts in Housing. Load please refer to draft AA
6. THIS PRODUCT MEETS EUROPEAN UNION DIRECTIVES AND OTHER COUNTRY REGULATIONS AS DESCRIBED IN GS–22–008 .
7. THE HOUSING WILL WITHSTAND EXPOSURE TO 260 DEGREE PEAK TEMPERATURE FOR 10 SECONDS IN A WAVE SOLDER APPLICATION. WITH A 1.6mm MINIMUM THICK CIRCUIT BOARD.

| KIT P/No: | P.F. HOUSING QTY | HOUSING QTY | P.F. CONTACT QTY | CONTACT QTY | P.C.B. Thk. | REMARK |
|---|---|---|---|---|---|---|
| 88993–301LF | | 1 | | 9 | 1.6mm | |
| 88993–302LF | | 1 | | 9 | 2.0mm | SEE NOTE 3 |
| 88993–303LF | | 1 | | 9 | 2.0mm | |
| 88993–308LF | | 1 | | 9 | 2.4mm | |
| 88993–908LF | | 1 | | 8 | 2.4mm | |
| 88993–311LF | 1 | | 9 | | | |
| 88993–312LF | 1 | | 6 | | | |
| 88993–309LF | | 1 | | 9 | 2.4mm | SEE NOTE 2 |
| 88993–304LF | | 1 | | 4 | 2.0mm | SEE NOTE 4 |
| 88993–305LF | | 1 | | 8 | 1.6mm | SEE NOTE 5 |

CONFIDENTIAL

| mat'l. code | | | | tolerances unless otherwise specified | | | CUSTOMER COPY | FCI www.fciconnect.com |
|---|---|---|---|---|---|---|---|---|
| ltr | ecn no | dr | date | linear | | | projection | title Str. Header CONNECTOR KIT |
| H | DG04–0039 | CLu | 040604 | | | | | |
| J | DG05–0021 | CLu | 050201 | | | | | |
| K | DG05–0438 | CLu | 051102 | angles | | | | |
| L | DG05–0525 | CLu | 051206 | dr | D Andrews | 920414 | MM | product family METRAL (tm) / code – |
| M | DG06–0078 | CLu | 060227 | engr | D Andrews | 920414 | | size A4 / dwg no 88993 |
| N | DG06–0231 | CLu | 060613 | chr | D Andrews | 920414 | scale 3:1 | sheet 1 of 1 |
| | | | | appd | | | | |
| sheet index | revision | N | | | | | | |
| | sheet | 1 | | | | | | |

cage code 22526

PDM: Rev:N STATUS: Released Printed: May 19, 2011

ACAD