PRODUCT NUMBER	PRODUCT DIMENSIONS			PLATING TYPE
	DIM "A"	DIM "B"	DIM "L"	
95245-701-XX	5.84	2.42	10.8	0.05um Au OVER 1.27um Ni MIN
95245-702-XX	8.08	2.41	13.1	0.05um Au OVER 1.27um Ni MIN
95245-703-XX	5.84	3.42	11.8	0.05um Au OVER 1.27um Ni MIN
95245-704-XX	6.8	2.85	12.2	0.05um Au OVER 1.27um Ni MIN

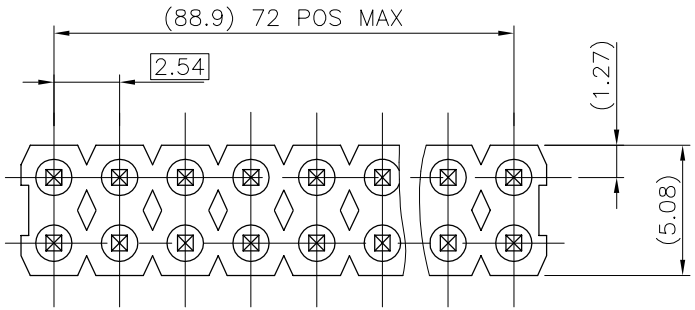

PART NUMBER

95245-YXX-XX

- NB OF POSITIONS(4 THRU 72)
- VERSION (PIN LENGTH)
- BASE PART NUMBER

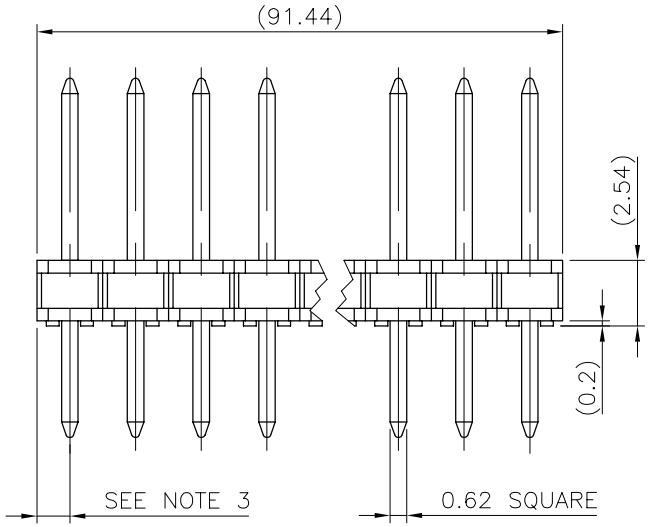

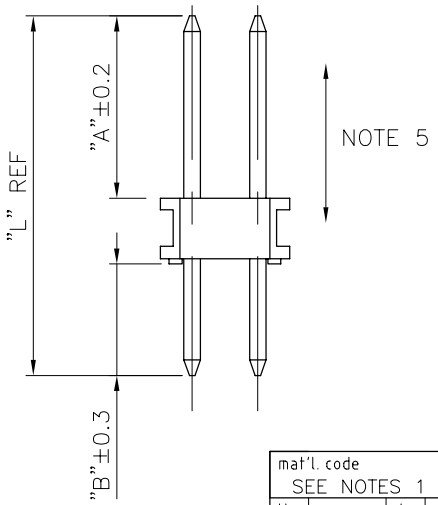

NOTES:

1 – MATERIAL BODY : 20% MIN GLASSFILLED NYLON, FLAME RETARDANT PER UL-94-V0 COLOR BLACK.

2 – PIN MATERIAL : BRASS.

3 – DIM 1.27 $^{+0.03}_{-0.13}$ FOR MOULDED SIDE(S) ONLY. IF SIDE(S) ARE BROKEN, DIM 1.02 TO 1.7 MAX APPLIES.

4 – TWO PIN TIP SIDES NOT PLATED.

5 – 9N MIN PIN RETENTION IN EITHER DIRECTION .

6 – PACKAGED IN ANTISTATIC POLY BAGS.

mat'l. code SEE NOTES 1 & 2				tolerances unless otherwise specified		CUSTOMER COPY	FCI ELECTRONICS www.fciconnect.com
ltr	ecn no	dr	date				
A	F60023	JMC	96.01.09	linear		projection	title ECON-STIK HEADER DR,STRAIGHT
				angles			
				dr	COMPAGNON J 96.01.09	mm	product family BSTIK / code 213
				engr	JMC 96.01.09		size A3 / dwg no 95245
				chr		scale 5:1	sheet 1 of 1
				appd	JMC 96.01.09		
sheet index	revision	A					
	sheet	1					

Tous droits strictement reservés. Reproduction ou communication a des tiers interdite sans autorisation écrite et préalable.
Propriété de FCI Besancon S. A.
Droits de reproduction FCI Besancon S. A.

All rights strictly reserved. Reproduction or issue to third parties in any form whatsoever is not permitted without written authority first obtained.
Property of FCI Besancon S. A.
Copyright FCI Besancon S. A.

form no. 7530-001-104

PDM: Rev:A STATUS:Released Printed: Sep 22, 2005