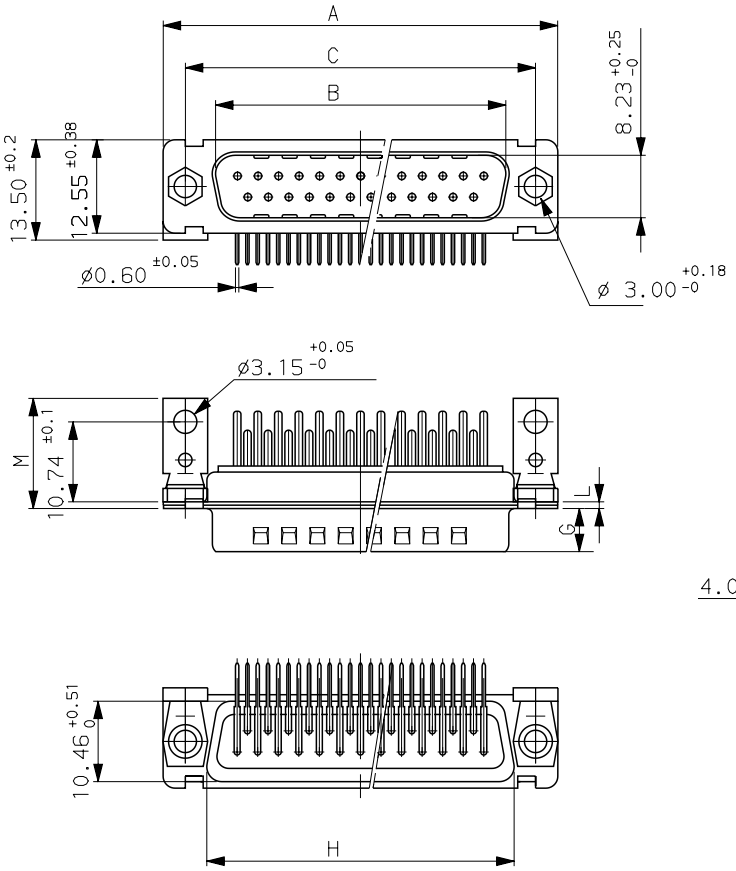

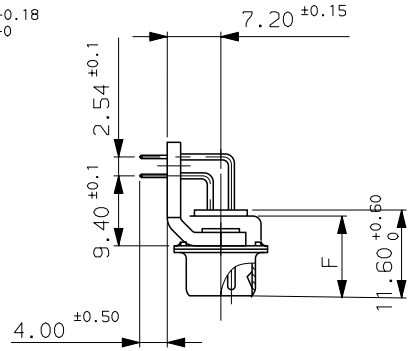

PC BOARD LAYOUT

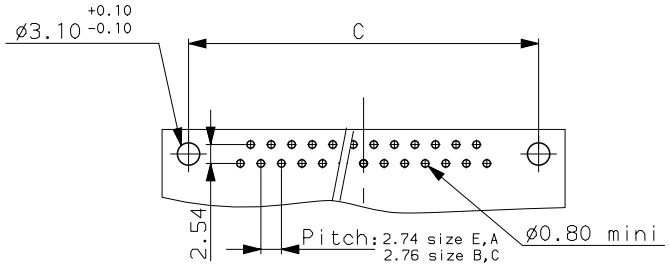

NOTES

Materiel and finish:

Housings:

Shells:steel,bright tin plated

Insulators:glass filled thermoplastic UL94V0

Contacts:

brass , gold plated over nickel

on mating end,bright tin plated over nickel

on termination end

Brackets: Steel bright tin plated

Dimensions are in millimeters

Shell size	Number of contacts	A +0.76 0	B +0.25 0	C ±0.12	F +0.51 0	G +0.25 0	H +0.51 0	L +0.22 0	M ±0.20	PART NUMBER 0.4µ gold	PART NUMBER flash gold
E	09	30.43	16.46	24.99	10.64	6.05	19.02	0.80	14.80	DEP09P500MTX	DEP09P531TX
A	15	38.76	24.54	33.32	10.64	6.05	27.25	0.80	14.80	DAP15P500MTX	DAP15P531TX
B	25	52.65	38.25	47.04	10.64	6.05	41.02	0.80	14.80	DBP25P500MTX	DBP35P531TX
C	37	68.94	54.71	63.50	10.64	6.05	57.45	0.80	14.80	DCP37P500MTX	DCP37P531TX

ISS	DATE	Lastest modification by : BART.S	MOD N°
b	29/01/04	add part number -	--

Designed by: JARRY date:12/06/01 | Type of drawing: CLIENT

Checked by : FONTENEAU date:12/06/01 | Released by: -- --

TITLE : PINS CONNECTORS D SUB. RIGHT ANGLED SPILL WITH METAL BRACKETS

SCALE 1.5 | Special mfg:-- item list n°: -- | MATERIAL:-- -- | N°: --

General linear Tolerances: -- | General machining surface texture: -- | Geometrical Tolerances see NF E 04-552 | SHEET 1/1

FCI FRAMATOME GROUP

FRAMATOME CONNECTORS FRANCE
Rue Louis Breguet - BP 05
72024 LE MANS Cedex
Tel. 33 (16) 43.84.08.43

This document is the property of FRAMATOME CONNECTORS FRANCE It must not be reproduced or communicated without permission in writting flow the owners

FORMAT A3 | SOURIAU DRG N° C01-8637-1555 | PROJECT M94D001

PDM: Rev:B STATUS:Released Printed: Sep 28, 2005