ROHS COMPLIANT

PRODUCT DATA DRAWING

REVISION HISTORY			
REV	DESCRIPTION	DATE	APPROVED
01	PRELIMINARY	12/16	DAL

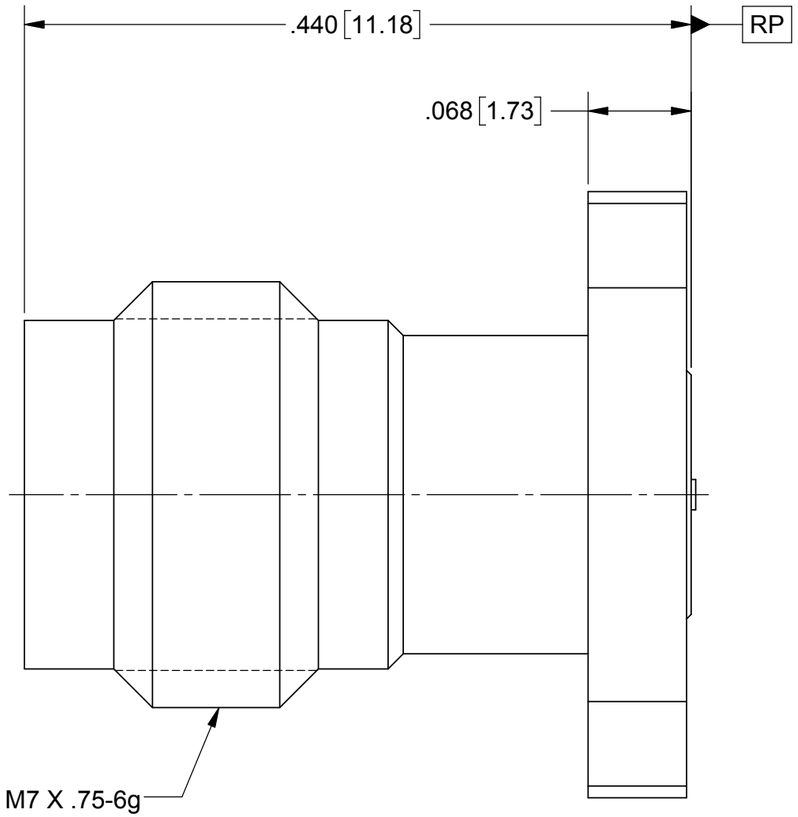

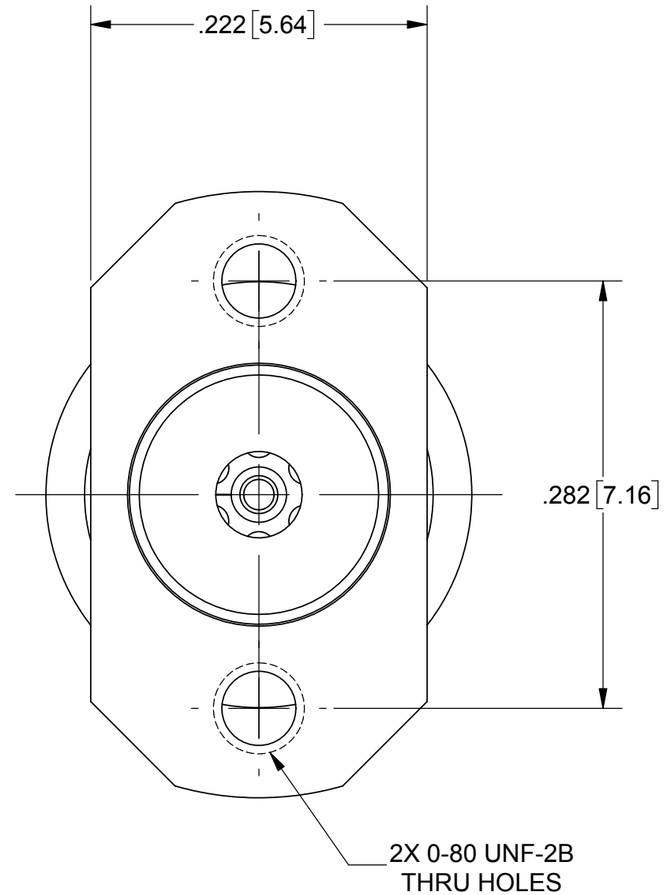

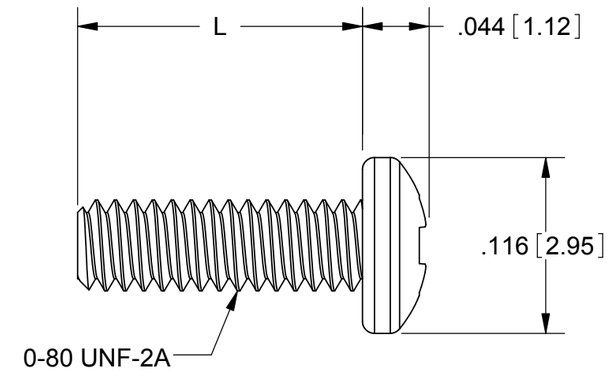

SCREW OPTIONS	L
FOR -1S	.188
FOR -2S	.250
FOR -3S	.438

SV P/N	DESCRIPTION	PCB THICKNESS
SF1621-60029-1S	INCL. TWO .188 SCREWS	.005 TO .123
SF1621-60029-2S	INCL. TWO .250 SCREWS	.034 TO .185
SF1621-60029-3S	INCL. TWO .438 SCREWS	.222 TO .373
SF1621-60029	NO SCREWS	.005 TO .373

MATERIAL:

BODIES & SCREWS: STAINLESS STEEL

CONTACT: BERYLLIUM COPPER

INSULATOR: ULTEM

FINISH:

BODIES & SCREWS: PASSIVATED

CONTACT: GOLD OVER NICKEL

MATERIAL: SEE NOTES

FINISH: SEE NOTES

SURFACE AREA: N/A

PROPRIETARY

THE INFORMATION CONTAINED IN THIS DRAWING IS THE SOLE PROPERTY OF SV MICROWAVE, INC. ANY REPRODUCTION IN PART OR AS A WHOLE WITHOUT THE WRITTEN PERMISSION OF SV MICROWAVE, INC IS PROHIBITED.

DIMENSIONS ARE IN INCHES TOLERANCES:

FRACTIONAL: ±1/64 ANGULAR: X° ±1°0' X°X' ±15'

DECIMAL: .X ±.030 .XX ±.010 .XXX ±.005

INTERPRET DIMENSIONS AND TOLERANCES PER ASME Y14.5M - 1994

THIRD ANGLE PROJECTION

UNLESS OTHERWISE SPECIFIED

1) ALL DIMENSIONS ARE IN INCHES [MILLIMETERS]
2) ALL DIMENSIONS ARE AFTER PLATING.
3) BREAK CORNERS & EDGES .005 R. MAX.
4) CHAM. 1ST & LAST THREADS.
5) SURFACE ROUGHNESS 63₄MIL-STD-10.
6) DIA.'S ON COMMON CENTERS TO BE CONCENTRIC WITHIN T.I.R.
7) REMOVE ALL BURRS

DRAWN:	BNK	12/08/16
CHECKED:	DAL	12/08/16
APPROVED:	DAL	12/08/16

Amphenol SV MICROWAVE
2400 Centrepark West Drive, Suite 100
West Palm Beach, FL 33409

TITLE: 2.4mm JACK 2 HOLE FLANGE WITH MOUNTING SCREWS

SIZE	CAGE CODE	DWG. NO.
B	95077	SF1621-60029-XS

SCALE: 10:1