Micropower DC-DC Converter

ADP1173

FEATURES

Operates From 2.0 V to 30 V Input Voltages
Only 110 μA Supply Current (Typical)
Step-Up or Step-Down Mode Operation
Very Few External Components Required
Low Battery Detector On-Chip
User-Adjustable Current Limit
Internal 1 A Power Switch
Fixed or Adjustable Output Voltage Versions
8-Pin DIP or SO-8 Package

APPLICATIONS

Notebook and Palmtop Computers
Cellular Telephones
Flash Memory V_{pp} Generators
3 V to 5 V, 5 V to 12 V Converters
9 V to 5 V, 12 V to 5 V Converters
Portable Instruments
LCD Bias Generators

FUNCTIONAL BLOCK DIAGRAMS

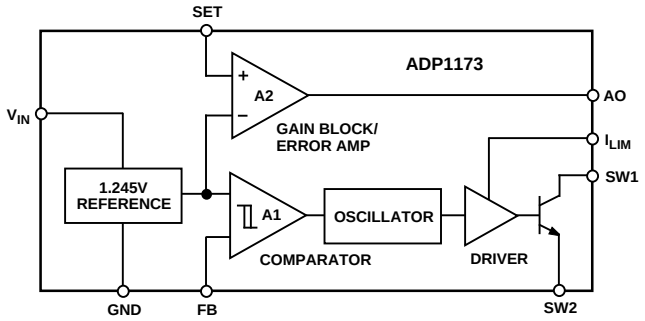

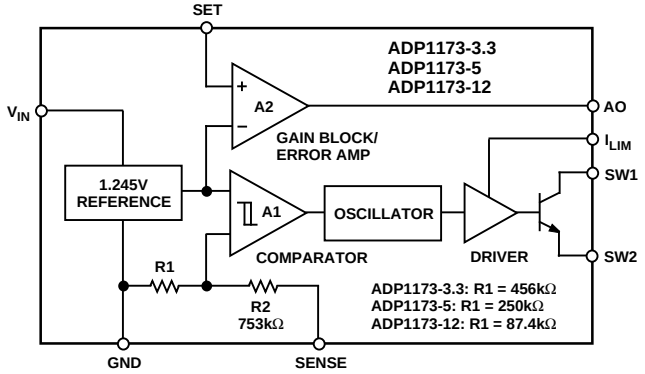

GENERAL DESCRIPTION

The ADP1173 is part of a family of step-up/step-down switching regulators that operates from an input supply voltage of as little as 2 V to 12 V in step-up mode and to 30 V in step-down mode.

The ADP1173 consumes as little as 110 μA in standby mode, making it ideal for applications that need low quiescent current. An auxiliary gain amplifier can serve as a low battery detector, linear regulator (under voltage lockout) or error amplifier.

The ADP1173 can deliver 80 mA at 5 V from a 3 V input in step-up configuration or 100 mA at 5 V from a 12 V input in step-down configuration. For input voltages of less than 2 V use the ADP1073.

REV. 0

Information furnished by Analog Devices is believed to be accurate and reliable. However, no responsibility is assumed by Analog Devices for its use, nor for any infringements of patents or other rights of third parties which may result from its use. No license is granted by implication or otherwise under any patent or patent rights of Analog Devices.

One Technology Way, P.O. Box 9106, Norwood, MA 02062-9106, U.S.A.
Tel: 617/329-4700 World Wide Web Site: http://www.analog.com
Fax: 617/326-8703
© Analog Devices, Inc., 1997

ADP1173–SPECIFICATIONS (@ T_A = 0°C to +70°C, V_{IN} = 3 V unless otherwise noted)

Model	Symbol	Conditions	Min	Typ	Max	Units
QUIESCENT CURRENT	I_Q	Switch Off		110	150	µA
QUIESCENT CURRENT, BOOST MODE CONFIGURATION	I_Q	No Load, T_A = +25°C ADP1173-3.3 ADP1173-5 ADP1173-12		 135 135 250		 µA µA µA
INPUT VOLTAGE	V_{IN}	Step-Up Mode Step-Down Mode	2.0		12.6 30	V V
COMPARATOR TRIP POINT VOLTAGE		ADP1173[1]	1.20	1.245	1.30	V
OUTPUT SENSE VOLTAGE	V_{OUT}	ADP1173-3.3[2] ADP1173-5[2] ADP1173-12[2]	3.14 4.75 11.4	3.30 5.00 12.0	3.46 5.25 12.6	V V V
COMPARATOR HYSTERESIS		ADP1173		5	12	mV
OUTPUT HYSTERESIS		ADP1173-3.3 ADP1173-5 ADP1173-12		13 20 50	35 55 100	mV mV mV
OSCILLATOR FREQUENCY	f_{OSC}		16	24	32	kHz
DUTY CYCLE		Full Load	43	55	63	%
SWITCH ON TIME	t_{ON}	I_{LIM} Tied to V_{IN}	15	23	32	µs
FEEDBACK PIN BIAS CURRENT		ADP1173, V_{FB} = 0 V		60	290	nA
SET PIN BIAS CURRENT		V_{SET} = V_{REF}		70	150	nA
GAIN BLOCK OUTPUT LOW	V_{OL}	I_{SINK} = 100 µA, V_{SET} = 1.00 V		0.15	0.4	V
REFERENCE LINE REGULATION		2.0 V ≤ V_{IN} ≤ 5 V 5 V ≤ V_{IN} ≤ 30 V		0.2 0.02	0.4 0.075	%/V %/V
SW_{SAT} VOLTAGE, STEP-UP MODE	V_{SAT}	V_{IN} = 3.0 V, I_{SW} = 650 mA V_{IN} = 5.0 V, I_{SW} = 1 A, T_A = +25°C V_{IN} = 5.0 V, I_{SW} = 1 A		0.5 0.8	0.85 1.0 1.4	V V V
SW_{SAT} VOLTAGE, STEP-DOWN MODE	V_{SAT}	V_{IN} = 12 V, T_A = +25°C, I_{SW} = 650 mA V_{IN} = 12 V, I_{SW} = 650 mA		 1.1	 1.5 1.7	 V V
GAIN BLOCK GAIN	A_V	R_L = 100 kΩ[3]	400	1000		V/V
CURRENT LIMIT		220 Ω from I_{LIM} to V_{IN} T_A = +25°C		400		mA
CURRENT LIMIT TEMPERATURE COEFFICIENT				–0.3		%/°C
SWITCH-OFF LEAKAGE CURRENT		Measured at SW1 Pin T_A = +25°C		1	10	µA
MAXIMUM EXCURSION BELOW GND	V_{SW2}	I_{SW1} ≤ 10 µA, Switch Off T_A = +25°C		–400	–350	mV

NOTES

[1]This specification guarantees that both the high and low trip points of the comparator fall within the 1.20 V to 1.30 V range.

[2]The output voltage waveform will exhibit a sawtooth shape due to the comparator hysteresis. The output voltage on the fixed output versions will always be within the specified range.

[3]100 kΩ resistor connected between a 5 V source and the AO pin.

Specifications subject to change without notice.

ABSOLUTE MAXIMUM RATINGS*

Supply Voltage (V_{IN}) . . . . . 36 V
SW1 Pin Voltage (V_{SW1}) . . . . . 50 V
SW2 Pin Voltage (V_{SW2}) . . . . . –0.5 V to V_{IN}
Feedback Pin Voltage (ADP1173) . . . . . 5 V
Sense Pin Voltage (ADP1173, –3.3, –5, –12) . . . . . 36 V
Maximum Power Dissipation . . . . . 500 mW
Maximum Switch Current . . . . . .1.5 A
Operating Temperature Range . . . . . 0°C to +70°C
Storage Temperature Range . . . . . –65°C to 150°C
Lead Temperature, (Soldering, 10 sec) . . . . . .+300°C

*Stresses above those listed under Absolute Maximum Ratings may cause permanent damage to the device. This is a stress rating only; functional operation of the device at these or any other conditions above those listed in the operational sections of this specification is not implied. Exposure to absolute maximum ratings for extended periods of time may affect device reliability.

ORDERING GUIDE

Model	Output Voltage	Package Options*
ADP1173AN	ADJ	N-8
ADP1173AR	ADJ	SO-8
ADP1173AN-3.3	3.3 V	N-8
ADP1173AR-3.3	3.3 V	SO-8
ADP1173AN-5	5 V	N-8
ADP1173AR-5	5 V	SO-8
ADP1173AN-12	12 V	N-8
ADP1173AR-12	12 V	SO-8

*N = Plastic DIP, SO = Small Outline Package.

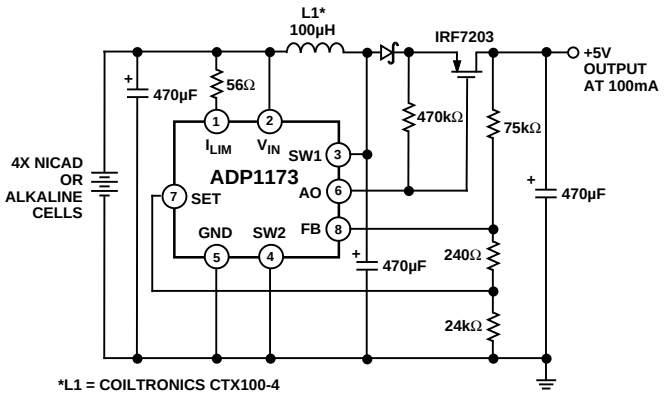

Figure 1. Step-Up or Step-Down Converter

PIN CONFIGURATIONS

N-8
8-Lead Plastic DIP

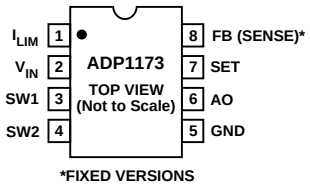

SO-8
8-Lead Plastic SO

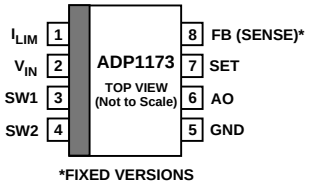

PIN FUNCTION DESCRIPTIONS

Mnemonic	Function
I_{LIM}	For normal conditions this pin is connected to V_{IN}. When lower current is required, a resistor should be connected between I_{LIM} and V_{IN}. Limiting the switch current to 400 mA is achieved by connecting a 220 Ω resistor.
V_{IN}	Input Voltage.
SW1	Collector Node of Power Transistor. For step-down configuration, connect to V_{IN}; for step-up configuration, connect to an inductor/diode.
SW2	Emitter Node of Power Transistor. For step-down configuration, connect to inductor/diode; for step-up configuration, connect to ground. Do not allow this pin to drop more than a diode drop below ground.
GND	Ground.
AO	Auxiliary Gain (GB) Output. The open collector can sink 100 µA.
SET	Gain Amplifier Input. The amplifier has positive input connected to the SET pin and negative input is connected to 1.245 V reference.
FB/SENSE	On the ADP1173 (adjustable) version this pin is connected to the comparator input. On the ADP1173-3.3, ADP1173-5 and ADP1173-12, the pin goes directly to the internal application resistor that sets the output voltage.

CAUTION

ESD (electrostatic discharge) sensitive device. Electrostatic charges as high as 4000 V readily accumulate on the human body and test equipment and can discharge without detection. Although the ADP1173 features proprietary ESD protection circuitry, permanent damage may occur on devices subjected to high energy electrostatic discharges. Therefore, proper ESD precautions are recommended to avoid performance degradation or loss of functionality.

ADP1173–Typical Performance Characteristics

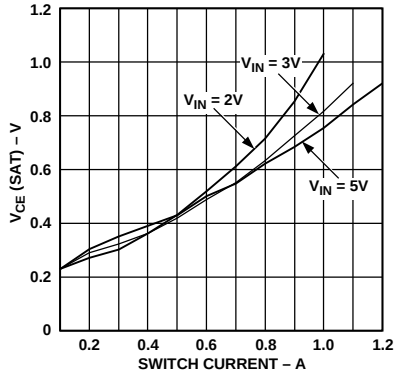

Figure 2. Saturation Voltage vs. Switch Current in Step-Up Mode

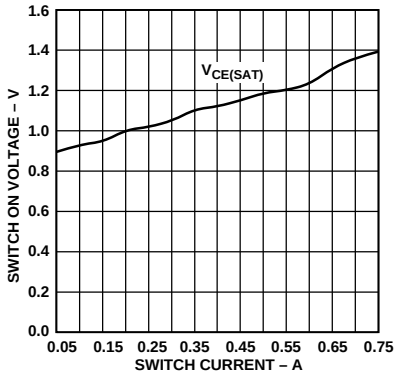

Figure 3. Switch ON Voltage vs. Switch Current in Step-Down Mode

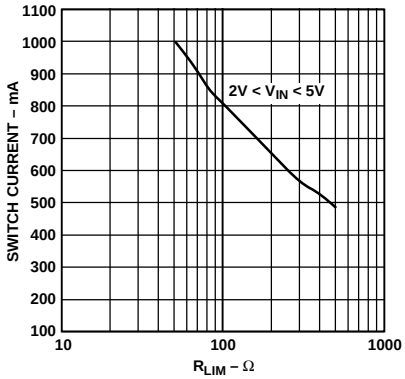

Figure 4. Maximum Switch Current vs. R_{LIM} in Step-Up Mode

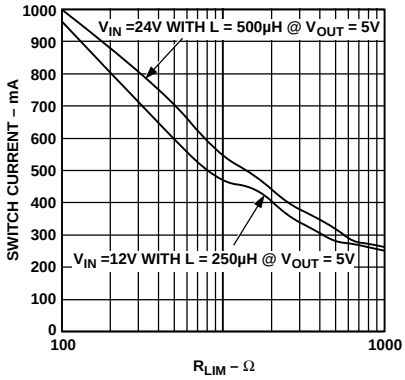

Figure 5. Maximum Switch Current vs. R_{LIM} in Step-Down Mode

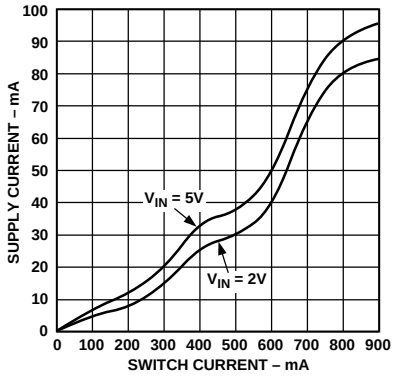

Figure 6. Supply Current vs. Switch Current

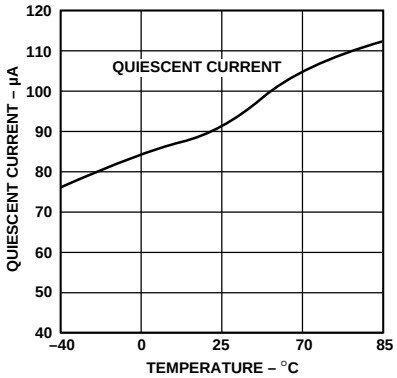

Figure 7. Quiescent Current vs. Temperature

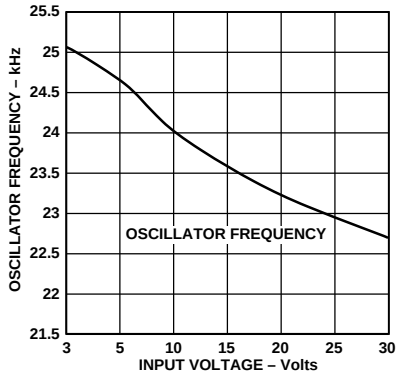

Figure 8. Oscillator Frequency vs. Input Voltage

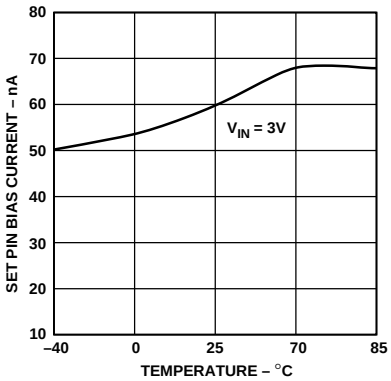

Figure 9. Set Pin Bias Current vs. Temperature

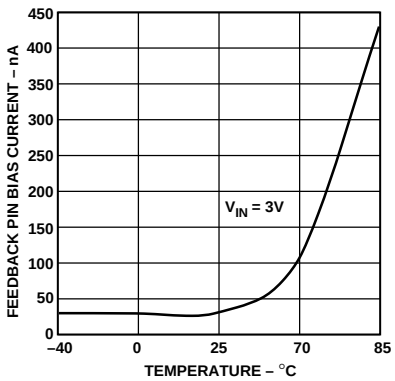

Figure 10. Feedback Pin Bias Current vs. Temperature

APPLICATIONS

Theory of Operation

The ADP1173 is a flexible, low power switch mode power supply (SMPS) controller. The regulated output voltage can be greater than the input voltage (boost or step-up mode) or less than the input (buck or step-down mode). This device uses a gated-oscillator technique to provide very high performance with low quiescent current.

A functional block diagram of the ADP1173 is shown on the front page. The internal 1.245 V reference is connected to one input of the comparator, while the other input is externally connected (via the FB pin) to a feedback network connected to the regulated output. When the voltage at the FB pin falls below 1.245 V, the 24 kHz oscillator turns on. A driver amplifier provides base drive to the internal power switch, and the switching action raises the output voltage. When the voltage at the FB pin exceeds 1.245 V, the oscillator is shut off. While the oscillator is off, the ADP1173 quiescent current is only 110 µA. The comparator includes a small amount of hysteresis, which ensures loop stability without requiring external components for frequency compensation.

The maximum current in the internal power switch can be set by connecting a resistor between V_{IN} and the I_{LIM} pin. When the maximum current is exceeded, the switch is turned OFF. The current limit circuitry has a time delay of about 2 µs. If an external resistor is not used, connect I_{LIM} to V_{IN}. Further information on I_{LIM} is included in the Limiting the Switch Current section of this data sheet.

The ADP1173 internal oscillator provides 23 µs ON and 19 µs OFF times, which is ideal for applications where the ratio between V_{IN} and V_{OUT} is roughly a factor of two (such as converting +3 V to + 5 V). However, wider range conversions (such as generating +12 V from a +5 V supply) can easily be accomplished.

An uncommitted gain block on the ADP1173 can be connected as a low battery detector. The inverting input of the gain block is internally connected to the 1.245 V reference. The noninverting input is available at the SET pin. A resistor divider, connected between V_{IN} and GND with the junction connected to the SET pin, causes the AO output to go LOW when the low battery set point is exceeded. The AO output is an open collector NPN transistor which can sink 100 µA.

The ADP1173 provides external connections for both the collector and emitter of its internal power switch, which permits both step-up and step-down modes of operation. For the step-up mode, the emitter (pin SW2) is connected to GND and the collector (pin SW1) drives the inductor. For step-down mode, the emitter drives the inductor while the collector is connected to V_{IN}.

The output voltage of the ADP1173 is set with two external resistors. Three fixed-voltage models are also available: ADP1173-3.3 (+3.3 V), ADP1173-5 (+5 V) and ADP1173-12 (+12 V). The fixed-voltage models are identical to the ADP1173, except that laser-trimmed voltage-setting resistors are included on the chip. On the fixed-voltage models of the ADP1173, simply connect the feedback pin (Pin 8) directly to the output voltage.

COMPONENT SELECTION

General Notes on Inductor Selection

When the ADP1173 internal power switch turns on, current begins to flow in the inductor. Energy is stored in the inductor core while the switch is on, and this stored energy is then transferred to the load when the switch turns off. Both the collector and the emitter of the switch transistor are accessible on the ADP1173, so the output voltage can be higher, lower or of opposite polarity than the input voltage.

To specify an inductor for the ADP1173, the proper values of inductance, saturation current and dc resistance must be determined. This process is not difficult, and specific equations for each circuit configuration are provided in this data sheet. In general terms, however, the inductance value must be low enough to store the required amount of energy (when both input voltage and switch ON time are at a minimum) but high enough that the inductor will not saturate when both V_{IN} and switch ON time are at their maximum values. The inductor must also store enough energy to supply the load without saturating. Finally, the dc resistance of the inductor should be low, so that excessive power will not be wasted by heating the windings. For most ADP1173 applications, an inductor of 47 µH to 470 µH, with a saturation current rating of 300 mA to 1 A and dc resistance <1 Ω is suitable. Ferrite core inductors which meet these specifications are available in small, surface-mount packages.

To minimize Electro-Magnetic Interference (EMI), a toroid or pot core type inductor is recommended. Rod core inductors are a lower cost alternative if EMI is not a problem.

CALCULATING THE INDUCTOR VALUE

Selecting the proper inductor value is a simple three-step process:

1. Define the operating parameters: minimum input voltage, maximum input voltage, output voltage and output current.
2. Select the appropriate conversion topology (step-up, step-down, or inverting).
3. Calculate the inductor value, using the equations in the following sections.

Inductor Selection—Step-Up Converter

In a step-up, or boost, converter (Figure 14), the inductor must store enough power to make up the difference between the input voltage and the output voltage. The power that must be stored is calculated from the equation:

$$P_L = \left(V_{OUT} + V_D - V_{IN(MIN)}\right) \times \left(I_{OUT}\right) \quad (1)$$

where V_D is the diode forward voltage (≈ 0.5 V for a 1N5818 Schottky). Energy is only stored in the inductor while the ADP1173 switch is ON, so the energy stored in the inductor on each switching cycle must be must be equal to or greater than:

$$\frac{P_L}{f_{OSC}} \quad (2)$$

in order for the ADP1173 to regulate the output voltage.

When the internal power switch turns ON, current flow in the inductor increases at the rate of:

$$I_L(t) = \frac{V_{IN}}{R'}\left(1 - e^{\frac{-R't}{L}}\right) \quad (3)$$

where L is in henrys and R' is the sum of the switch equivalent resistance (typically 0.8 Ω at +25°C) and the dc resistance of the inductor. In most applications, where the voltage drop across the switch is small compared to V_{IN} , a simpler equation can be used:

$$I_L(t) = \frac{V_{IN}}{L}t \quad (4)$$

Replacing "t" in the above equation with the ON time of the ADP1173 (23 µs, typical) will define the peak current for a given inductor value and input voltage. At this point, the inductor energy can be calculated as follows:

$$E_L = \frac{1}{2}LI^2{}_{PEAK} \quad (5)$$

As previously mentioned, E_L must be greater than P_L/f_{OSC} so the ADP1173 can deliver the necessary power to the load. For best efficiency, peak current should be limited to 1 A or less. Higher switch currents will reduce efficiency, because of increased saturation voltage in the switch. High peak current also increases output ripple. As a general rule, keep peak current as low as possible to minimize losses in the switch, inductor and diode.

In practice, the inductor value is easily selected using the equations above. For example, consider a supply that will generate 9 V at 50 mA from a 3 V source. The inductor power required is, from Equation 1:

$$P_L = (9V + 0.5V - 3V) \times (50\,mA) = 325\,mW$$

On each switching cycle, the inductor must supply:

$$\frac{P_L}{f_{OSC}} = \frac{325\,mW}{24\,kHz} = 13.5\,\mu J$$

The required inductor power is fairly low in this example, so the peak current can also be low. Assuming a peak current of 500 mA as a starting point, Equation 4 can be rearranged to recommend an inductor value:

$$L = \frac{V_{IN}}{I_{L(MAX)}}t = \frac{3V}{500\,mA}23\,\mu s = 138\,\mu H$$

Substituting a standard inductor value of 100 µH, with 0.2 Ω dc resistance, will produce a peak switch current of:

$$I_{PEAK} = \frac{3V}{1.0\,\Omega}\left(1 - e^{\frac{-1.0\,\Omega \times 23\,\mu s}{100\,\mu H}}\right) = 616\,mA$$

Once the peak current is known, the inductor energy can be calculated from Equation 5:

$$E_L = \frac{1}{2}(100\,\mu H) \times (616\,mA)^2 = 19\,\mu J$$

The inductor energy of 19 µJ is greater than the P_L/f_{OSC} requirement of 13.5 µJ, so the 100 µH inductor will work in this application. By substituting other inductor values into the same equations, the optimum inductor value can be selected.

When selecting an inductor, the peak current must not exceed the maximum switch current of 1.5 A. If the equations shown above result in peak currents > 1.5 A, the ADP1073 should be considered. This device has a 72% duty cycle, so more energy is stored in the inductor on each cycle. This results in greater output power.

The peak current must be evaluated for both minimum and maximum values of input voltage. If the switch current is high when V_{IN} is at its minimum, then the 1.5 A limit may be exceeded at the maximum value of V_{IN}. In this case, the ADP1173's current limit feature can be used to limit switch current. Simply select a resistor (using Figure 4) that will limit the maximum switch current to the I_{PEAK} value calculated for the minimum value of V_{IN}. This will improve efficiency by producing a constant I_{PEAK} as V_{IN} increases. See the Limiting the Switch Current section of this data sheet for more information.

Note that the switch current limit feature does not protect the circuit if the output is shorted to ground. In this case, current is only limited by the dc resistance of the inductor and the forward voltage of the diode.

Inductor Selection—Step-Down Converter

The step-down mode of operation is shown in Figure 15. Unlike the step-up mode, the ADP1173's power switch does not saturate when operating in the step-down mode. Therefore, switch current should be limited to 650 mA in this mode. If the input voltage will vary over a wide range, the I_{LIM} pin can be used to limit the maximum switch current. If higher output current is required, the ADP1111 should be considered.

The first step in selecting the step-down inductor is to calculate the peak switch current as follows:

$$I_{PEAK} = \frac{2I_{OUT}}{DC}\left(\frac{V_{OUT} + V_D}{V_{IN} - V_{SW} + V_D}\right) \quad (6)$$

where DC = duty cycle (0.55 for the ADP1173)

V_{SW} = voltage drop across the switch
V_D = diode drop (0.5 V for a 1N5818)
I_{OUT} = output current
V_{OUT} = the output voltage
V_{IN} = the minimum input voltage

As previously mentioned, the switch voltage is higher in step-down mode than step-up mode. V_{SW} is a function of switch current and is therefore a function of V_{IN}, L, time and V_{OUT}. For most applications, a V_{SW} value of 1.5 V is recommended.

The inductor value can now be calculated:

$$L = \frac{V_{IN(MIN)} - V_{SW} - V_{OUT}}{I_{PEAK}} \times t_{ON} \quad (7)$$

where t_{ON} = switch ON time (23 µs)

If the input voltage will vary (such as an application that must operate from a 12 V to 24 V source) an R_{LIM} resistor should be selected from Figure 5. The R_{LIM} resistor will keep switch current constant as the input voltage rises. Note that there are separate R_{LIM} values for step-up and step-down modes of operation.

For example, assume that +5 V at 300 mA is required from a 12 V to +24 V input. Deriving the peak current from Equation 6 yields:

$$I_{PEAK} = \frac{2 \times 300\,mA}{0.55}\left(\frac{5+0.5}{12-1.5+0.5}\right) = 545\,mA$$

The peak current can then be inserted into Equation 7 to calculate the inductor value:

$$L = \frac{12-1.5-5}{545\,mA} \times 23\,\mu s = 232\,\mu H$$

Since 232 µH is not a standard value, the next lower standard value of 220 µH would be specified.

To avoid exceeding the maximum switch current when the input voltage is at +24 V, an R_{LIM} resistor should be specified. Using the step-down curve of Figure 5, a value of 180 Ω will limit the switch current to 600 mA.

Inductor Selection—Positive-to-Negative Converter

The configuration for a positive-to-negative converter using the ADP1173 is shown in Figure 17. As with the step-up converter, all of the output power for the inverting circuit must be supplied by the inductor. The required inductor power is derived from the formula:

$$P_L = \left(|V_{OUT}| + V_D\right) \times \left(I_{OUT}\right) \tag{8}$$

The ADP1173 power switch does not saturate in positive-to-negative mode. The voltage drop across the switch can be modeled as a 0.75 V base-emitter diode in series with a 0.65 Ω resistor. When the switch turns on, inductor current will rise at a rate determined by:

$$I_L(t) = \frac{V_L}{R'}\left(1 - e^{-\frac{R't}{L}}\right) \tag{9}$$

where $R' = 0.65\ \Omega + R_{L(DC)}$

$V_L = V_{IN} - 0.75\ V$

For example, assume that a –5 V output at 50 mA is to be generated from a +4.5 V to +5.5 V source. The power in the inductor is calculated from Equation 8:

$$P_L = \left(|-5V| + 0.5V\right) \times (50\,mA) = 275\,mW$$

During each switching cycle, the inductor must supply the following energy:

$$\frac{P_L}{f_{OSC}} = \frac{275\,mW}{24\,kHz} = 11.5\,\mu J$$

Using a standard inductor value of 220 µH, with 0.2 Ω dc resistance, will produce a peak switch current of:

$$I_{PEAK} = \frac{4.5V - 0.75V}{0.65\,\Omega + 0.2\,\Omega}\left(1 - e^{\frac{-0.85\,\Omega \times 23\,\mu s}{220\,\mu H}}\right) = 375\,mA$$

Once the peak current is known, the inductor energy can be calculated from Equation 5:

$$E_L = \frac{1}{2}(220\,\mu H) \times (375\,mA)^2 = 15.5\,\mu J$$

The inductor energy of 15.5 µJ is greater than the P_L/f_{OSC} requirement of 11.5 µJ, so the 220 µH inductor will work in this application.

The input voltage only varies between 4.5 V and 5.5 V in this example. Therefore, the peak current will not change enough to require an R_{LIM} resistor and the I_{LIM} pin can be connected directly to V_{IN}. Care should be taken to ensure that the peak current does not exceed 650 mA.

CAPACITOR SELECTION

For optimum performance, the ADP1173's output capacitor must be carefully selected. Choosing an inappropriate capacitor can result in low efficiency and/or high output ripple.

Ordinary aluminum electrolytic capacitors are inexpensive, but often have poor Equivalent Series Resistance (ESR) and Equivalent Series Inductance (ESL). Low ESR aluminum capacitors, specifically designed for switch mode converter applications, are also available, and these are a better choice than general purpose devices. Even better performance can be achieved with tantalum capacitors, although their cost is higher. Very low values of ESR can be achieved by using OS-CON* capacitors (Sanyo Corporation, San Diego, CA). These devices are fairly small, available with tape-and-reel packaging, and have very low ESR.

The effects of capacitor selection on output ripple are demonstrated in Figures 11, 12, and 13. These figures show the output of the same ADP1173 converter, which was evaluated with three different output capacitors. In each case, the peak switch current is 500 mA and the capacitor value is 100 µF. Figure 11 shows a Panasonic HF-series* radial aluminum electrolytic. When the switch turns off, the output voltage jumps by about 90 mV and then decays as the inductor discharges into the capacitor. The rise in voltage indicates an ESR of about 0.18 Ω. In Figure 12, the aluminum electrolytic has been replaced by a Sprague 593D-series* tantalum device. In this case the output jumps about 35 mV, which indicates an ESR of 0.07 Ω. Figure 13 shows an OS-CON SA series capacitor in the same circuit, and ESR is only 0.02 Ω.

*All trademarks are properties of their respective holders.

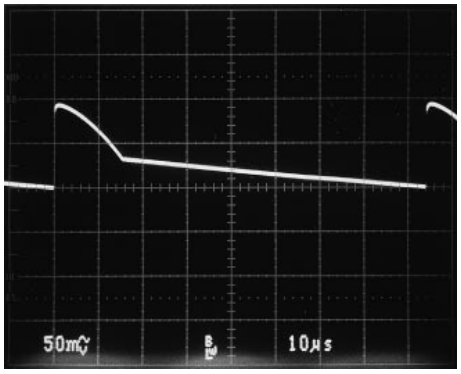

Figure 11. Aluminum Electrolytic

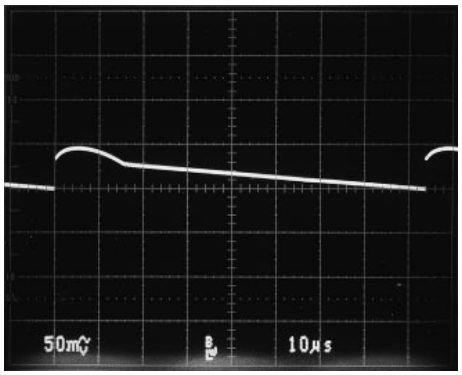

Figure 12. Tantalum Electrolytic

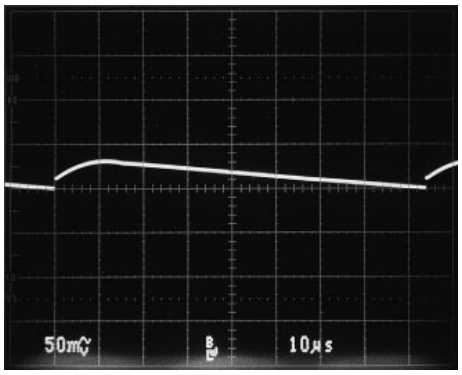

Figure 13. OS-CON Capacitor

If low output ripple is important, the user should consider the ADP3000. This device switches at 400 kHz, and the higher switching frequency simplifies the design of the output filter. Consult the ADP3000 data sheet for additional details.

All potential current paths must be considered when analyzing very low power applications, and this includes capacitor leakage current. OS-CON capacitors have leakage in the 5 µA to 10 µA range, which will reduce efficiency when the load is also in the microampere range. Tantalum capacitors, with typical leakage in the 1 µA to 5 µA range, are recommended for very low power applications.

DIODE SELECTION

In specifying a diode, consideration must be given to speed, forward voltage drop and reverse leakage current. When the ADP1173 switch turns off, the diode must turn on rapidly if high efficiency is to be maintained. Schottky rectifiers, as well as fast signal diodes such as the 1N4148, are appropriate. The forward voltage of the diode represents power that is not delivered to the load, so V_F must also be minimized. Again, Schottky diodes are recommended. Leakage current is especially important in low current applications, where the leakage can be a significant percentage of the total quiescent current.

For most circuits, the 1N5818 is a suitable companion to the ADP1173. This diode has a V_F of 0.5 V at 1 A, 4 µA to 10 µA leakage, and fast turn-on and turn-off times. A surface mount version, the MBRS130T3, is also available. For applications where the ADP1173 is "off" most of the time, such as when the load is intermittent, a silicon diode may provide higher overall efficiency due to lower leakage. For example, the 1N4933 has a 1 A capability, but with a leakage current of less than 1 µA. The higher forward voltage of the 1N4933 reduces efficiency when the ADP1173 delivers power, but the lower leakage may outweigh the reduction in efficiency.

For switch currents of 100 mA or less, a Schottky diode such as the BAT85 provides a V_F of 0.8 V at 100 mA and leakage less than 1 µA. A similar device, the BAT54, is available in a SOT23 package. Even lower leakage, in the 1 nA to 5 nA range, can be obtained with a 1N4148 signal diode.

General purpose rectifiers, such as the 1N4001, are not suitable for ADP1173 circuits. These devices, which have turn-on times of 10 µs or more, are too slow for switching power supply applications. Using such a diode "just to get started" will result in wasted time and effort. Even if an ADP1173 circuit appears to function with a 1N4001, the resulting performance will not be indicative of the circuit performance when the correct diode is used.

CIRCUIT OPERATION, STEP-UP (BOOST) MODE

In boost mode, the ADP1173 produces an output voltage that is higher than the input voltage. For example, +12 V can be generated from a +5 V logic power supply or +5 V can be derived from two alkaline cells (+3 V).

Figure 16 shows an ADP1173 configured for step-up operation. The collector of the internal power switch is connected to the output side of the inductor, while the emitter is connected to GND. When the switch turns on, pin SW1 is pulled near ground. This action forces a voltage across L1 equal to V_{IN}–$V_{CE(SAT)}$, and current begins to flow through L1. This current reaches a final value (ignoring second-order effects) of:

$$I_{PEAK} \cong \frac{V_{IN} - V_{CE(SAT)}}{L} \times 23\,\mu s$$

where 23 µs is the ADP1173 switch's "on" time.

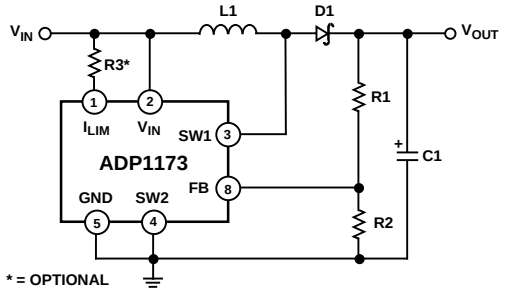

Figure 14. Step-Up Mode Operation

When the switch turns off, the magnetic field collapses. The polarity across the inductor changes, current begins to flow through D1 into the load and the output voltage is driven above the input voltage.

The output voltage is fed back to the ADP1173 via resistors R1 and R2. When the voltage at pin FB falls below 1.245 V, SW1 turns "on" again and the cycle repeats. The output voltage is therefore set by the formula:

$$V_{OUT} = 1.245\ V \times \left(1 + \frac{R1}{R2}\right)$$

The circuit of Figure 14 shows a direct current path from V_{IN} to V_{OUT}, via the inductor and D1. Therefore, the boost converter is not protected if the output is short circuited to ground.

CIRCUIT OPERATION, STEP-DOWN (BUCK) MODE

The ADP1173's step-down mode is used to produce an output voltage lower than the input voltage. For example, the output of four NiCd cells (+4.8 V) can be converted to a +3.3 V logic supply.

A typical configuration for step-down operation of the ADP1173 is shown in Figure 15. In this case, the collector of the internal power switch is connected to V_{IN} and the emitter drives the inductor. When the switch turns on, SW2 is pulled up toward V_{IN}. This forces a voltage across L1 equal to $(V_{IN}–V_{CE}) – V_{OUT}$, and causes current to flow in L1. This current reaches a final value of:

$$I_{PEAK} \cong \frac{V_{IN} - V_{CE} - V_{OUT}}{L} \times 23\ \mu s$$

where 23 µs is the ADP1173 switch's "on" time.

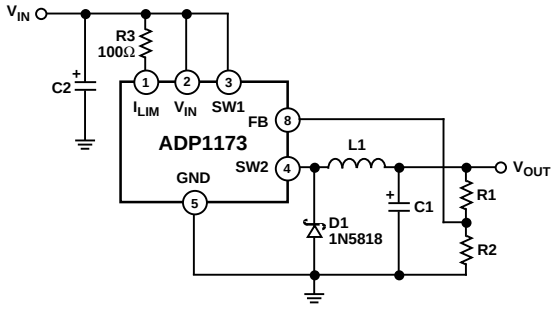

Figure 15. Step-Down Mode Operation

When the switch turns off, the magnetic field collapses. The polarity across the inductor changes and the switch side of the inductor is driven below ground. Schottky diode D1 then turns on and current flows into the load. Notice that the Absolute Maximum Rating for the ADP1173's SW2 pin is 0.5 V below ground. To avoid exceeding this limit, D1 must be a Schottky diode. Using a silicon diode in this application will generate forward voltages above 0.5 V, which will cause potentially damaging power dissipation within the ADP1173.

The output voltage of the buck regulator is fed back to the ADP1173's FB pin by resistors R1 and R2. When the voltage at pin FB falls below 1.245 V, the internal power switch turns "on" again and the cycle repeats. The output voltage is set by the formula:

$$V_{OUT} = 1.245\ V \times \left(1 + \frac{R1}{R2}\right)$$

When operating the ADP1173 in step-down mode, the output voltage is impressed across the internal power switch's emitter-base junction when the switch is off. To protect the switch, the output voltage should be limited to 6.2 V or less. If a higher output voltage is required, a Schottky diode should be placed in series with SW2, as shown in Figure 16.

If high output current is required in a step-down converter, the ADP1111 or ADP3000 should be considered. These devices offer higher frequency operation, which reduces inductor size, and an external pass transistor can be added to reduce R_{ON} of the switch.

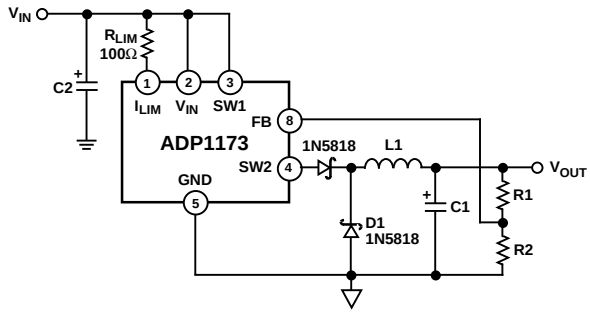

Figure 16. Step-Down Mode, V_{OUT} > 6.2 V

If the input voltage to the ADP1173 varies over a wide range, a current limiting resistor at Pin 1 may be required. If a particular circuit requires high peak inductor current with minimum input supply voltage, the peak current may exceed the switch maximum rating and/or saturate the inductor when the supply voltage is at the maximum value. See the Limiting the Switch Current section of this data sheet for specific recommendations.

POSITIVE-TO-NEGATIVE CONVERSION

The ADP1173 can convert a positive input voltage to a negative output voltage, as shown in Figure 17. This circuit is essentially identical to the step-down application of Figure 15, except that the "output" side of the inductor is connected to power ground. When the ADP1173's internal power switch turns off, current flowing in the inductor forces the output ($–V_{OUT}$) to a negative potential. The ADP1173 will continue to turn the switch on

until its FB pin is 1.245 V above its GND pin, so the output voltage is determined by the formula:

$$-V_{OUT} = 1.245\ V \times \left(1 + \frac{R1}{R2}\right)$$

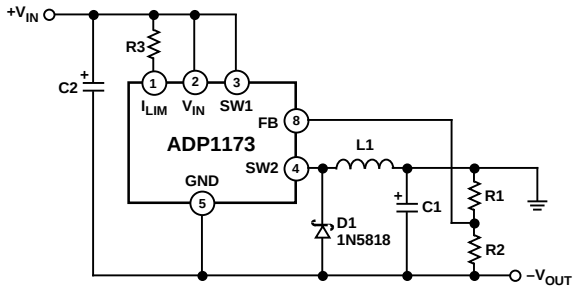

Figure 17. A Positive-to-Negative Converter

The design criteria for the step-down application also apply to the positive-to-negative converter. The output voltage should be limited to |6.2 V|, unless a diode is inserted in series with the SW2 Pin (see Figure 16). Also, D1 must again be a Schottky diode to prevent excessive power dissipation in the ADP1173.

NEGATIVE-TO-POSITIVE CONVERSION

The circuit of Figure 18 converts a negative input voltage to a positive output voltage. Operation of this circuit configuration is similar to the step-up topology of Figure 14, except that the current through feedback resistor R1 is level-shifted below ground by a PNP transistor. The voltage across R1 is (V_{OUT}–V_{BEQ1}). However, diode D2 level-shifts the base of Q1 about 0.6 V below ground, thereby cancelling the V_{BE} of Q1. The addition of D2 also reduces the circuit's output voltage sensitivity to temperature, which otherwise would be dominated by the –2 mV/°C V_{BE} contribution of Q1. The output voltage for this circuit is determined by the formula:

$$V_{OUT} = 1.245\ V \times \left(\frac{R1}{R2}\right)$$

Unlike the positive step-up converter, the negative-to-positive converter's output voltage can be either higher or lower than the input voltage.

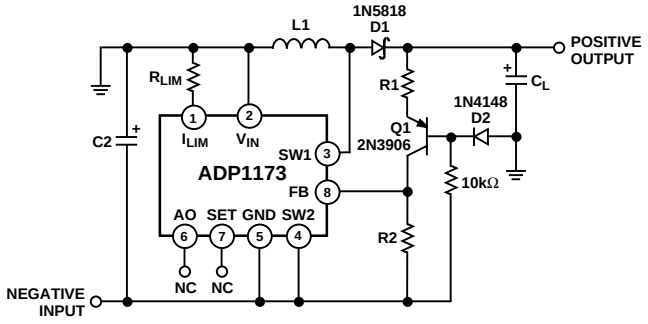

Figure 18. A Negative-to-Positive Converter

LIMITING THE SWITCH CURRENT

The ADP1173's R_{LIM} pin permits the switch current to be limited with a single resistor. This current limiting action occurs on a pulse by pulse basis. This feature allows the input voltage to vary over a wide range, without saturating the inductor or exceeding the maximum switch rating. For example, a particular design may require peak switch current of 800 mA with a 2.0 V input. If V_{IN} rises to 4 V, however, the switch current will exceed 1.6 A. The ADP1173 limits switch current to 1.5 A and thereby protects the switch, but increases the output ripple. Selecting the proper resistor will limit the switch current to 800 mA, even if V_{IN} increases. The relationship between R_{LIM} and maximum switch current is shown in Figures 4 and 5.

The I_{LIM} feature is also valuable for controlling inductor current when the ADP1173 goes into continuous-conduction mode. This occurs in the step-up mode when the following condition is met:

$$\frac{V_{OUT} + V_{DIODE}}{V_{IN} - V_{SW}} < \frac{1}{1 - DC}$$

where *DC* is the ADP1173's duty cycle. When this relationship exists, the inductor current does not go all the way to zero during the time the switch is OFF. When the switch turns on for the next cycle, the inductor current begins to ramp up from the residual level. If the switch ON time remains constant, the inductor current will increase to a high level (see Figure 19). This increases output ripple, and can require a larger inductor and capacitor. By controlling switch current with the I_{LIM} resistor, output ripple current can be maintained at the design values. Figure 20 illustrates the action of the I_{LIM} circuit.

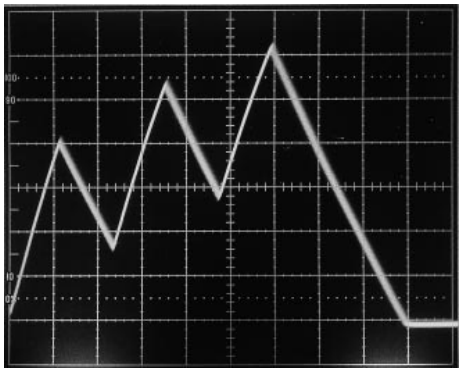

Figure 19. (I_{LIM} Operation, R_{LIM} = 0 Ω)

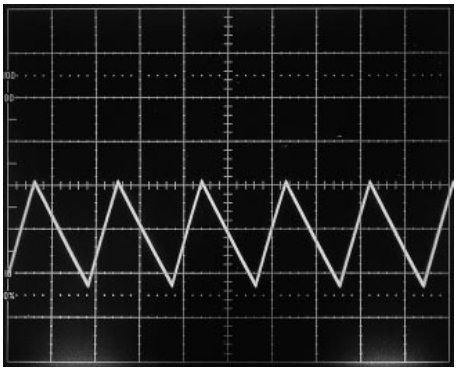

Figure 20. (I_{LIM} Operation, R_{LIM} = 240 Ω)

The internal structure of the I_{LIM} circuit is shown in Figure 21. Q1 is the ADP1173's internal power switch, which is paralleled by sense transistor Q2. The relative sizes of Q1 and Q2 are scaled so that I_{Q2} is 0.5% of I_{Q1}. Current flows to Q2 through an internal 80 Ω resistor and through the R_{LIM} resistor. These two resistors parallel the base-emitter junction of the oscillator-disable transistor, Q3. When the voltage across R1 and R_{LIM} exceeds 0.6 V, Q3 turns on and terminates the output pulse. If only the 80 Ω internal resistor is used (i.e., the I_{LIM} pin is connected directly to V_{IN}), the maximum switch current will be 1.5 A. Figures 4 and 5 gives R_{LIM} values for lower current-limit values.

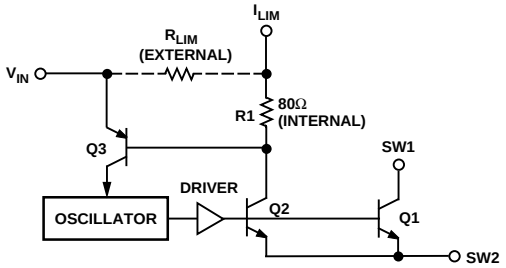

Figure 21. Current Limit Operation

The delay through the current limiting circuit is approximately 2 µs. If the switch ON time is reduced to less than 4 µs, accuracy of the current trip-point is reduced. Attempting to program a switch ON time of 2 µs or less will produce spurious responses in the switch ON time. However, the ADP1173 will still provide a properly regulated output voltage.

PROGRAMMING THE GAIN BLOCK

The gain block of the ADP1173 can be used as a low-battery detector, error amplifier or linear post regulator. The gain block consists of an op amp with PNP inputs and an open-collector NPN output. The inverting input is internally connected to the ADP1173's 1.245 V reference, while the noninverting input is available at the SET pin. The NPN output transistor will sink about 100 µA.

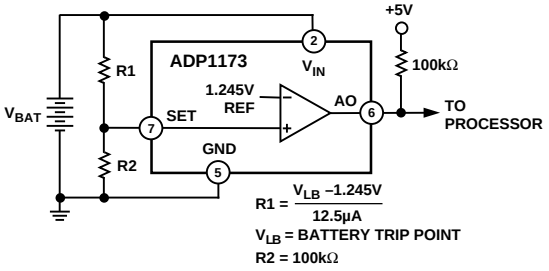

Figure 22. Setting the Low Battery Detector Trip Point

Figure 22 shows the gain block configured as a low battery monitor. Resistors R1 and R2 should be set to high values to reduce quiescent current, but not so high that bias current in the SET input causes large errors. A value of 100 kΩ for R2 is a good compromise. The value for R1 is then calculated from the formula:

$$R1 = \frac{V_{LOBATT} - 1.245\,V}{\frac{1.245\,V}{R2}}$$

where V_{LOBATT} is the desired low battery trip point. Since the gain block output is an open-collector NPN, a pull-up resistor should be connected to the positive logic power supply.

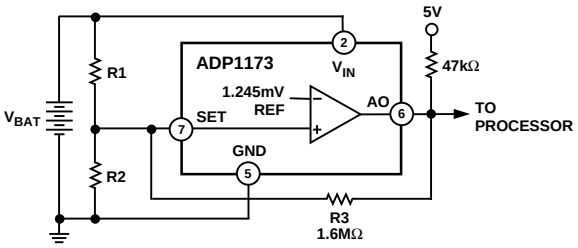

Figure 23. Adding Hysteresis to the Low Battery Detector

Typical Circuit Applications

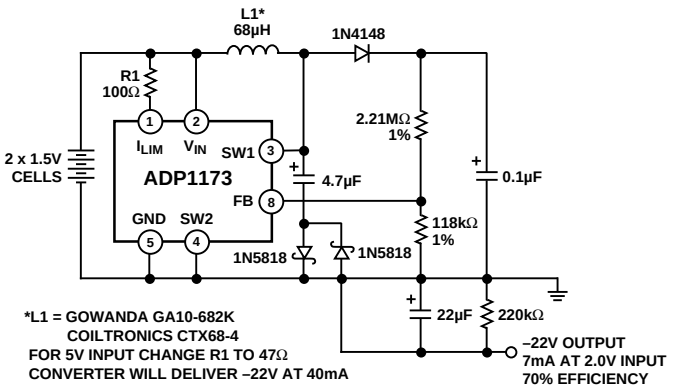

Figure 24. 3 V–22 V LCD Bias Generator

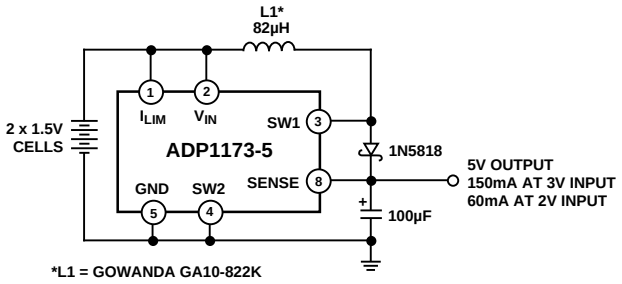

Figure 25. 3 V to 5 V Step-Up Converter

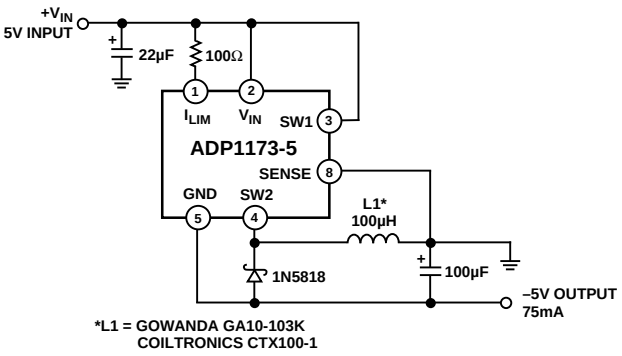

Figure 26. +5 V to –5 V Converter

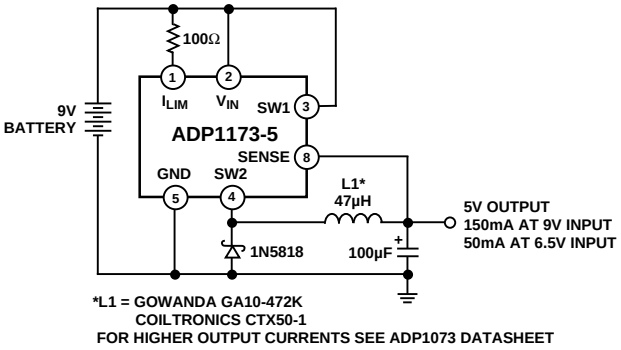

Figure 27. 9 V to 5 V Converter

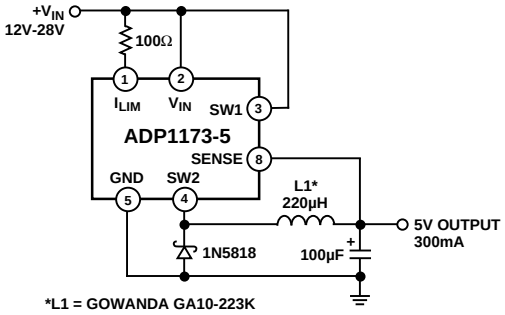

Figure 28. +20 V to 5 V Step-Down Converter

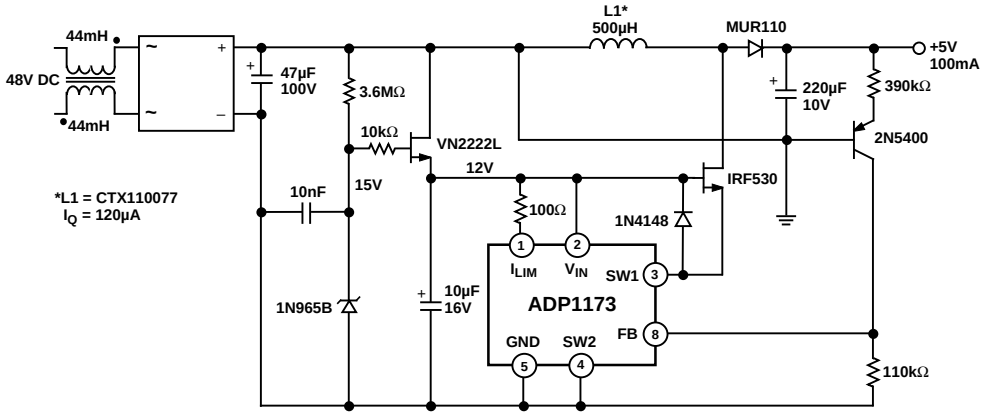

Figure 29. Telecom Supply

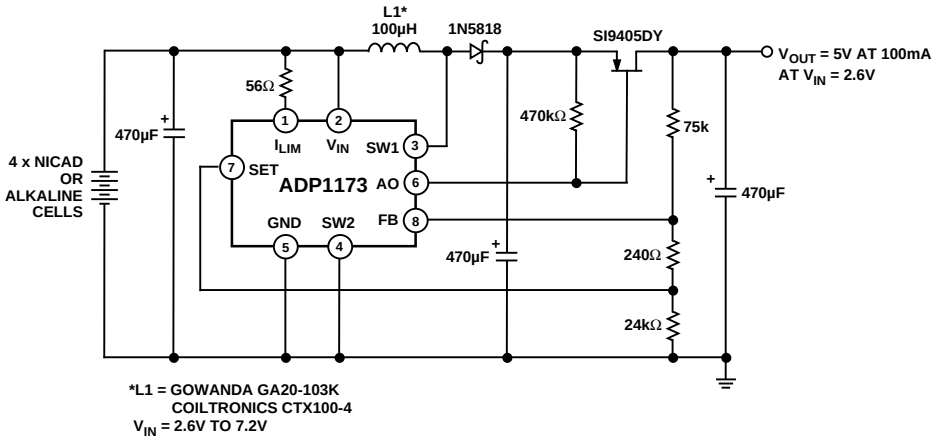

Figure 30. 5 V to 5 V Step-Up or Step-Down Converter

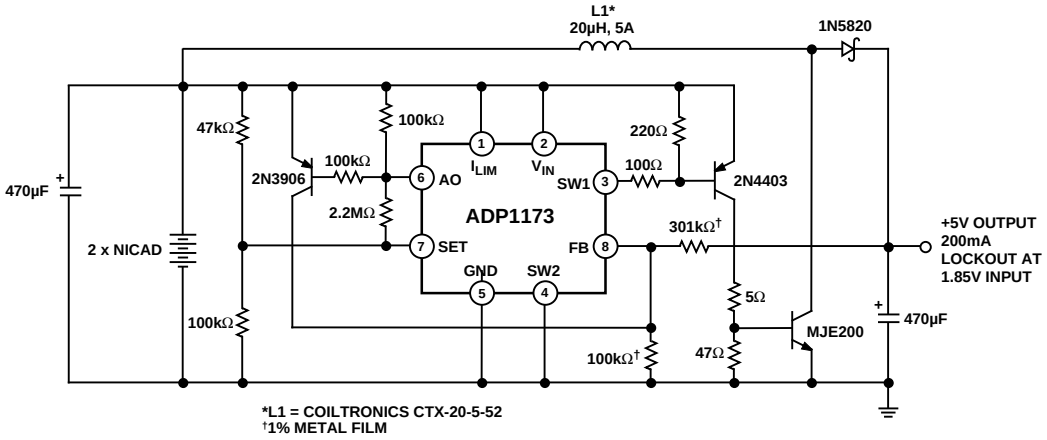

Figure 31. 2 V to 5 V at 200 mA Step-Up Converter with Undervoltage Lockout

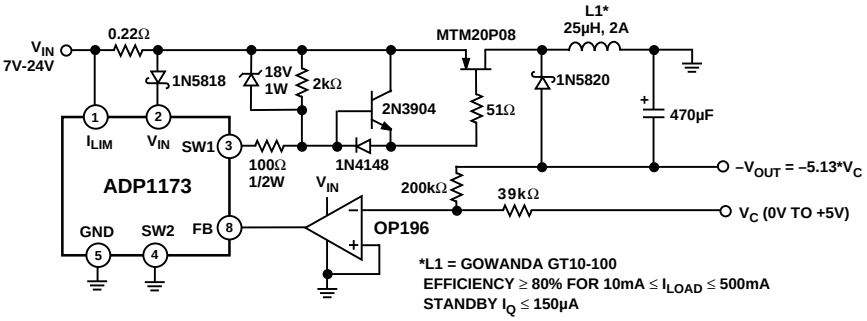

Figure 32. Voltage Controlled Positive-to-Negative Converter

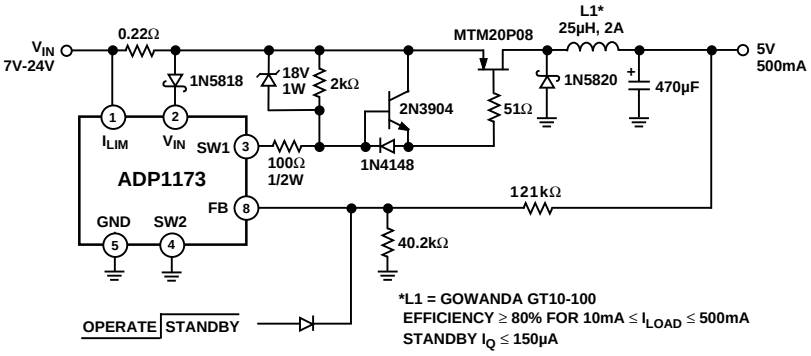

Figure 33. High Power, Low Quiescent Current Step-Down Converter

OUTLINE DIMENSIONS

Dimensions shown in inches and (mm).

8-Lead Plastic DIP
(N-8)

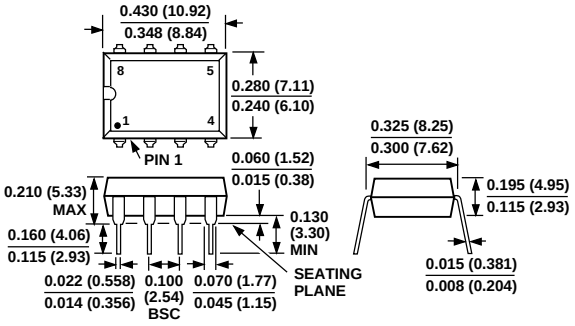

8-Lead Small Outline Package
(SO-8)

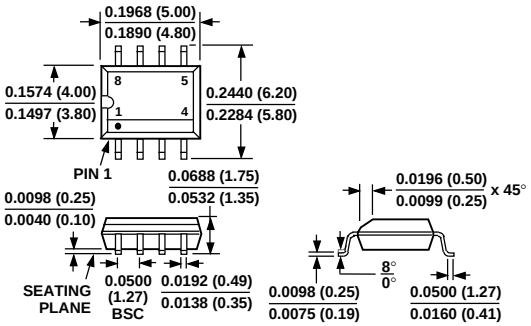

C2965–12–1/97

PRINTED IN U.S.A.