Micropower Regulator with Comparator and Shutdown

FEATURES

- **20μA Supply Current**
- 125mA Output Current
- 2.5V Reference
- Reference Output Sources 4mA and Sinks 4mA
- Open Collector Comparator Sinks 10mA
- Logic Shutdown
- 0.2V Dropout Voltage
- Thermal Limiting
- 8-Lead SO Package

APPLICATIONS

- Battery Systems
- Battery Backup System
- Portable Terminals
- Portable Instruments
- Memory Keep Alive

DESCRIPTION

The LT®1120A is a combination micropower positive regulator and free collector comparator on a single monolithic chip. With only 20μA supply current, the LT1120A can supply over 125mA of output current. Input voltage range is from 4.5V to 36V and dropout voltage is 0.6V at 125mA. Dropout voltage decreases with lower load currents. Also included on the chip is a class B output 2.5V reference that can either source or sink current. This allows it to be used as a supply splitter or auxiliary output. A shutdown pin allows logic shutdown of the output.

The comparator can be used for system or battery monitoring. For example, the comparator can be used to warn of low system voltage. Frequency compensation of the comparator for amplifier applications can be obtained by adding external output capacitance.

LT, LTC and LT are registered trademarks of Linear Technology Corporation.

TYPICAL APPLICATION

5V Regulator

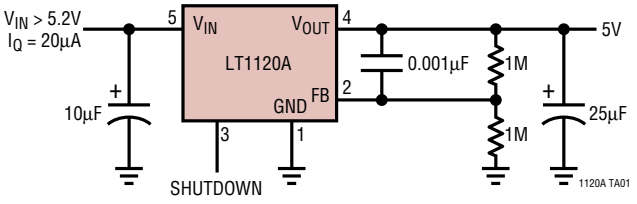

Dropout Voltage and Supply Current

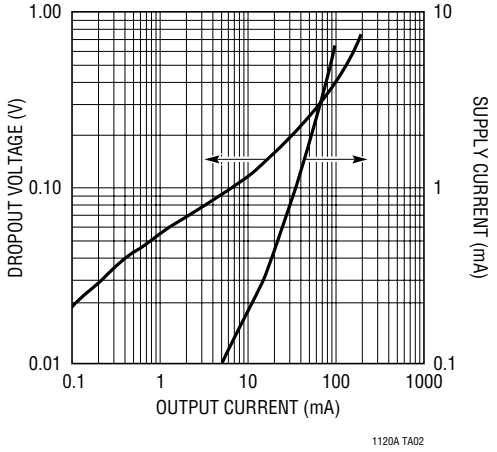

ABSOLUTE MAXIMUM RATINGS

(Note 1)

Input Voltage 36V
NPN Collector Voltage 36V
Output Short-Circuit Duration ..... Indefinite
Power Dissipation ..... Internally Limited
Operating Temperature Range
LT1120AC ..... 0°C to 100°C
LT1120AI ..... –40°C to 100°C
Storage Temperature Range ..... –65°C to 150°C

PACKAGE/ORDER INFORMATION

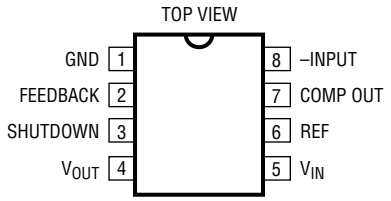

N8 PACKAGE 8-LEAD PDIP
S8 PACKAGE 8-LEAD PLASTIC SO

T_{JMAX} = 110°C, θ_{JA} = 130°C/W (N)
T_{JMAX} = 110°C, θ_{JA} = 190°C/W (S)

ORDER PART NUMBER
LT1120ACN8 LT1120ACS8 LT1120AIS8
S8 PART MARKING
1120A 1120AI

Consult LTC Marketing for parts specified with wider operating temperature ranges.

ELECTRICAL CHARACTERISTICS T_J = 25°C

PARAMETER	CONDITIONS		MIN	TYP	MAX	UNITS
Reference						
Reference Voltage	4.5V ≤ V_{IN} ≤ 36V		2.46	2.50	2.54	V
Line Regulation	4.5V ≤ V_{IN} ≤ 36V			0.01	0.015	%/V
Load Regulation	–2.0mA ≤ I_{REF} ≤ 2mA, V_{IN} = 12V			0.3	0.6	%
Output Source Current	V_{IN} = 5V		2	4		mA
Output Sink Current	V_{IN} = 5V		2	4		mA
Temperature Stability				1		%
Regulator						
Supply Current	V_{IN} = 6V, I_{OUT} ≤ 100mA V_{IN} = 36V, I_{OUT} ≤ 100mA V_{IN} = 12V, I_{OUT} = 125mA			20 30 11	25 40 20	µA µA mA
Output Current	(V_{IN} – V_{OUT}) ≥ 1V, V_{IN} ≥ 6V		125			mA
Load Regulation	(V_{IN} – V_{OUT}) ≥ 1V, V_{IN} ≥ 6V			0.2	0.5	%
Line Regulation	6V ≤ V_{IN} ≤ 36V			0.01	0.015	%/V
Dropout Voltage	I_{OUT} = 100mA I_{OUT} = 125mA			0.02 0.40	0.05 0.65	V V
Feedback Sense Voltage	V_{IN} = 12V		2.44	2.5	2.56	V
Shutdown Pin Voltage		Normal			0.4	V
	V_{OUT} ≤ 0.5V	Shutdown	2.2	1.4		V
Shutdown Pin Current	V_{IN} = 1.4V			10		µA
Feedback Bias Current				15	40	nA
Minimum Load Current	V_{IN} = 36V			1	5	µA
Short-Circuit Current	V_{IN} = 36V			250	400	mA
Comparator						
Offset Voltage	V_{IN} = 36V			3	7	mV
Bias Current	V_{IN} = 36V			15	40	nA
Gain	ΔV_{OUT} = 29V, R_L = 20k		2000	10000		V/V
Power Supply Rejection	4.5V ≤ V_S ≤ 36V		80	96		dB
Output Sink Current	V_{IN} = 4.5V		10	18		mA
Saturation Voltage	I_{OUT} = 1mA			0.4	0.6	V
Input Voltage Range			0		V_{IN} – 1	V
Response Time				5		µs
Leakage Current	V_{IN} = 36V, V(Pin 7) = 36V				2	µA

ELECTRICAL CHARACTERISTICS

The ● denotes the specifications which apply over the full operating temperature range of T_J = 25°C.

PARAMETER	CONDITIONS		MIN	TYP	MAX	UNITS
Reference						
Reference Voltage	$4.5V \le V_{IN} \le 36V$	●	2.40	2.50	2.55	V
Line Regulation	$4.5V \le V_{IN} \le 36V$	●		0.01	0.02	%/V
Load Regulation	$-2.0mA \le I_{REF} \le 2mA$, V_{IN} = 12V	●		0.4	0.8	%
Output Source Current	V_{IN} = 5V	●	2			mA
Output Sink Current	V_{IN} = 5V	●	2			mA
Regulator						
Supply Current	V_{IN} = 6V, $I_{OUT} \le 100\mu A$ V_{IN} = 36V, $I_{OUT} \le 100\mu A$ V_{IN} = 12V, I_{OUT} = 125mA	● ● ●		30 40 11	40 50 20	µA µA mA
Output Current	$(V_{IN} - V_{OUT}) \ge 1V$, $V_{IN} \ge 6V$	●	125			mA
Load Regulation	$(V_{IN} - V_{OUT}) \ge 1V$, $V_{IN} \ge 6V$	●			1	%
Line Regulation	$6V \le V_{IN} \le 36V$	●			0.02	%/V
Dropout Voltage	I_{OUT} = 100µA I_{OUT} = 125mA	● ●			0.06 0.85	V V
Feedback Sense Voltage	V_{IN} = 12V	●	2.38	2.5	2.57	V
Feedback Bias Current		●			50	nA
Minimum Load Current	V_{IN} = 36V	●			50	µA
Short-Circuit Current	V_{IN} = 36V	●		240	400	mA
Comparator						
Offset Voltage	V_{IN} = 36V	●			10	mV
Bias Current	V_{IN} = 36V	●		15	60	nA
Gain	ΔV_{OUT} = 29V, R_L = 20k	●	1000			V/V
Output Sink Current (Note 2)	V_{IN} = 4.5V	●	5	10		mA
Leakage Current	V_{IN} = 36V, V(Pin 7) = 36V	●			8	µA

Note 1: Absolute Maximum Ratings are those values beyond which the life to the device may be impaired.

Note 2: For $T_A \le -40°C$ output sink current drops to 2.5mA.

TYPICAL PERFORMANCE CHARACTERISTICS

Regulator Load Regulation

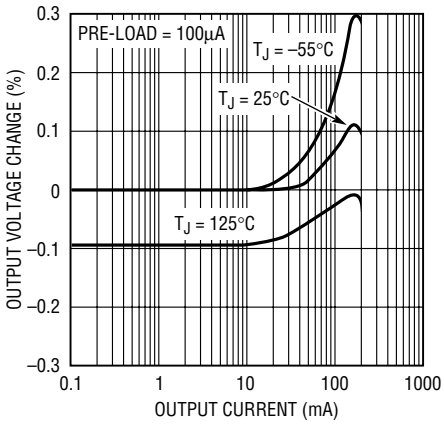

1120A G01

Supply Current

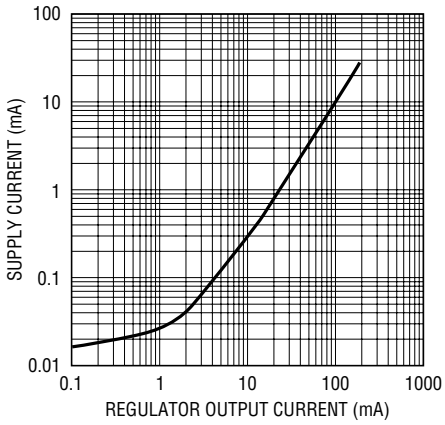

1120A G02

Regulator Short-Circuit Current

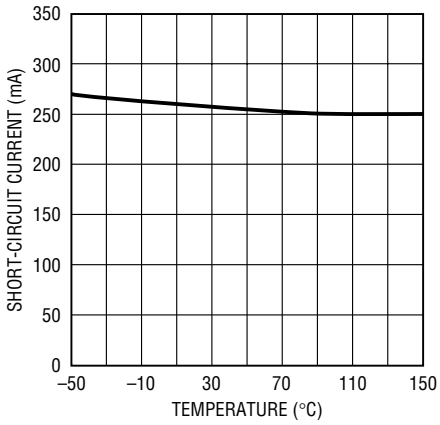

1120A G03

TYPICAL PERFORMANCE CHARACTERISTICS

Dropout Voltage

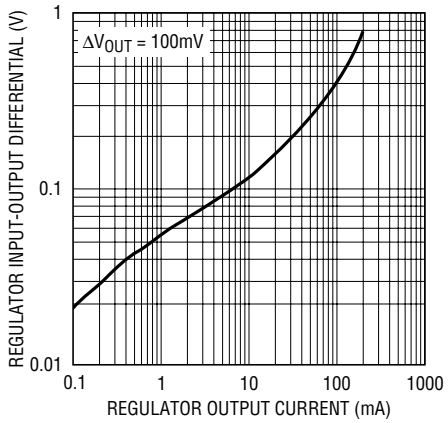

Regulator Minimum Load Current

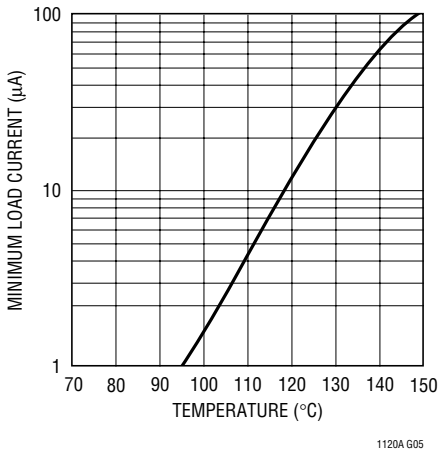

Regulator Ripple Rejection

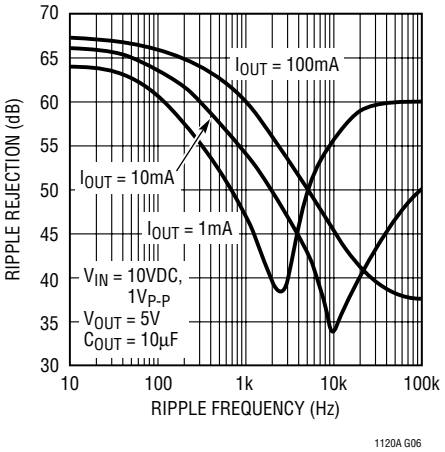

Supply Current

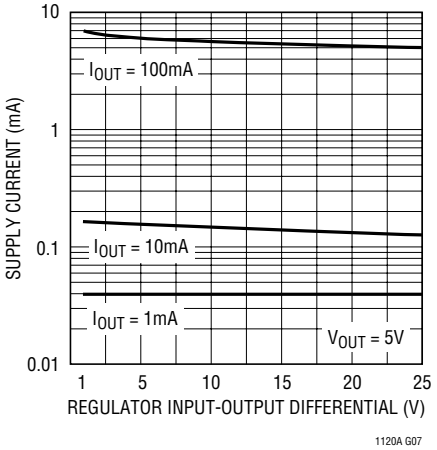

Supply Current at Dropout

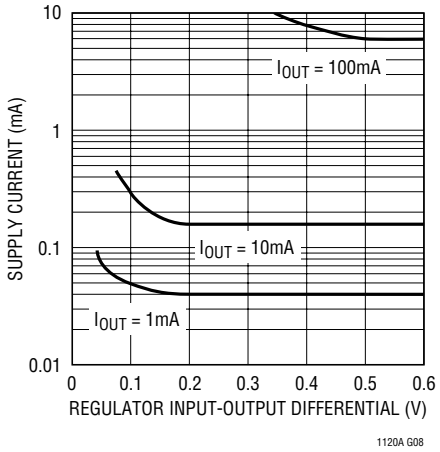

Reference Regulation

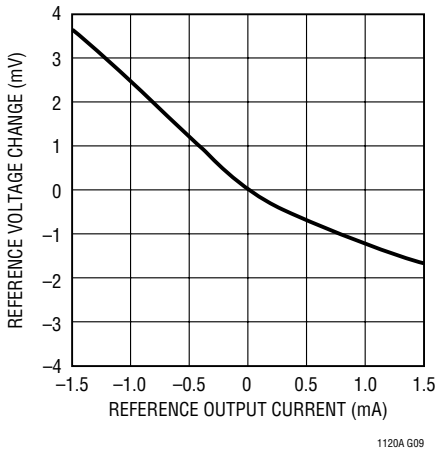

Feedback Pin Current

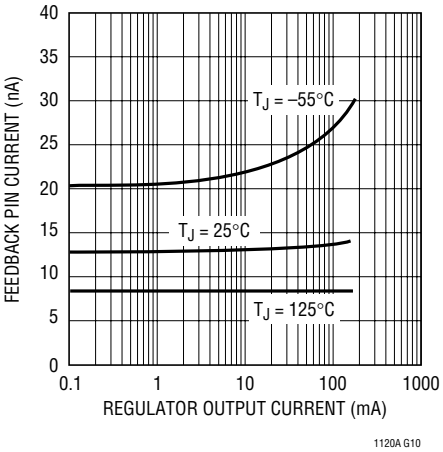

Regulator Thermal Regulation

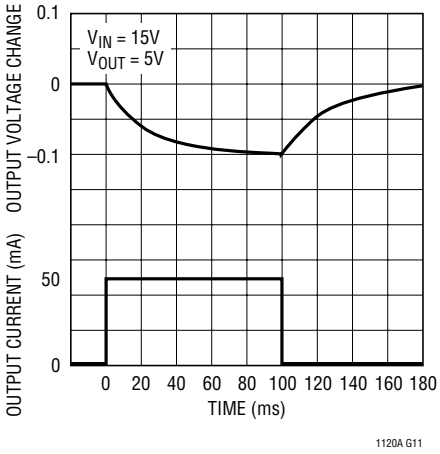

Turn-On Characteristic

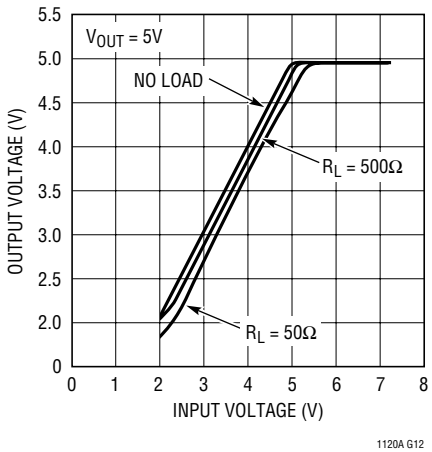

PIN FUNCTIONS

GND (Pin 1): Ground

FEEDBACK (Pin 2): This is the feedback point of the regulator. When operating, it is nominally at 2.5V. Optimum source resistance is 200k to 500k. The feedback pin should not be driven below ground or more positive than 5V.

SHUTDOWN (Pin 3): A logic 1 shuts off main regulator. Caution: noise or leakage into the shutdown pin can affect output voltage.

V_{OUT} (Pin 4): Main output, requires 10µF output capacitor. Can be shorted to V_{IN} or ground without damaging device.

V_{IN} (Pin 5): Input Supply. Bypass with 10µF capacitor. Must always be more positive than ground.

REF (Pin 6): Reference. 2.5V can source or sink current. May be shorted to ground or up to 5V. Voltages in excess of 5V can damage the device.

COMP OUT (Pin 7): Open Collector NPN Output. May be connected to any voltage from ground to 36V more positive than ground (operates above V_{IN}). Short-circuit protected.

–INPUT (Pin 8): Inverting Comparator Input.

BLOCK DIAGRAM

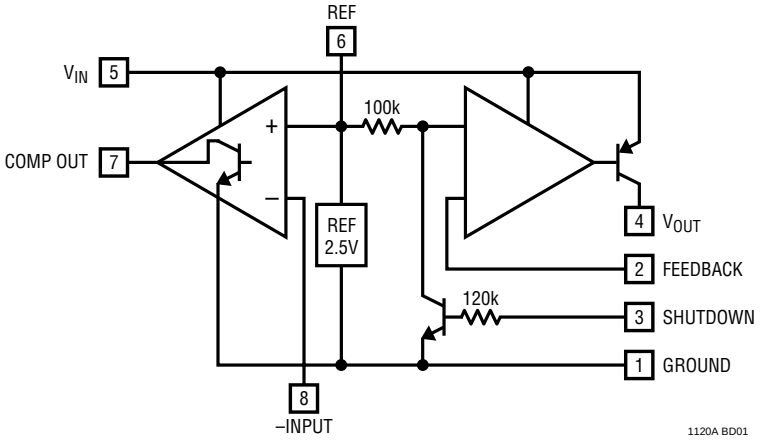

APPLICATIONS INFORMATION

The LT1120A is especially suited for micropower system applications. For example, the comparator section of the LT1120A may be used as a battery checker to provide an indication of low battery. Another type of system application for the LT1120A would be to generate the equivalent of split supplies off of a single power input. The regulator section provides regulated output voltage and the reference, which can both source and sink current is then an artificial system ground providing a split supply for the system.

For many applications the comparator can be frequency compensated to operate as an amplifier. Compensation values for various gains are given in the data sheet. The comparator gain is purposely low to make it easier to frequency compensate as an amplifier. The NPN output is capable of sinking 10mA and can drive loads connected to voltages in excess of the positive power supply. This is useful for driving switches or linear regulators off of a higher input voltage.

APPLICATIONS INFORMATION

Reference

Internal to the LT1120A is a 2.5V trimmed class B output reference. The reference was designed to be able to source or sink current so it could be used in supply splitting applications as well as a general purpose reference for external circuitry. The design of the reference allows it to source and sink typically 4mA. The available source and sink current decreases as temperature increases. It is sometimes desirable to decrease the AC output impedance by placing an output capacitor on Pin 6. The reference in the LT1120A becomes unstable with large capacitive loads placed directly on it. When using an output capacitor, about 20Ω should be used to isolate the capacitor from the reference pin. This 20Ω resistor can be placed directly in series with the capacitor or alternatively the reference line can have 20Ω placed in series with it and then a capacitor to ground. This is shown in Figure 1. Other than placing large capacitive loads on the reference, no other precautions are necessary and the reference is stable with nominal stray capacitances.

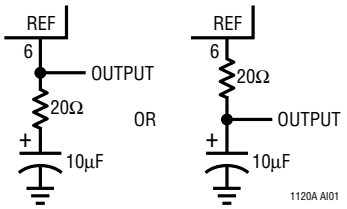

Figure 1. Bypassing Reference

Overload Protection

The main regulator in the LT1120A is current limited at approximately 250mA. The current limit is stable with both input voltage and temperature.

Like most other IC regulators, a minimum load is required on the output of the LT1120A to maintain regulation. For most standard regulators this is normally specified at 5mA. Of course, for a micropower regulator this would be a tremendously large current. The output current must be large enough to absorb all the leakage current of the pass transistor at the maximum operating temperature. It also affects the transient response; low output currents have long recovery times from load transients. At high operating temperatures the minimum load current increases and having too low of a load current may cause the output to go unregulated. Devices are tested for minimum load current at high temperature. The output voltage setting resistors to the feedback terminal can usually be used to provide the minimum load current.

Frequency Compensation

The LT1120A is frequency compensated by a dominant pole on the output. An output capacitor of 10µF is usually large enough to provide good stability. **Increasing the output capacitor above 10µF further improves stability**. In order to ensure stability, a feedback capacitor is needed between the output pin and the feedback pin. This is because stray capacitance can form another pole with the large value of feedback resistors used with the LT1120A. Also, a feedback capacitor minimizes noise pickup and improves ripple rejection.

With the large dynamic operating range of the output current, 10000:1, frequency response changes widely. Low AC impedance capacitors are needed to insure stability. While solid tantalum are best, aluminum electrolytics can be used but larger capacitor values may be needed.

TYPICAL APPLICATIONS

Regulator with Output Voltage Monitor

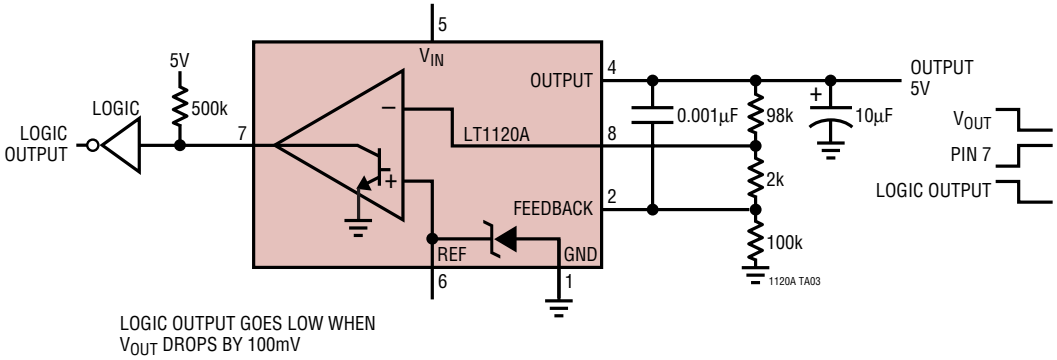

LOGIC OUTPUT GOES LOW WHEN V_{OUT} DROPS BY 100mV

Compensating the Comparator as an Op Amp

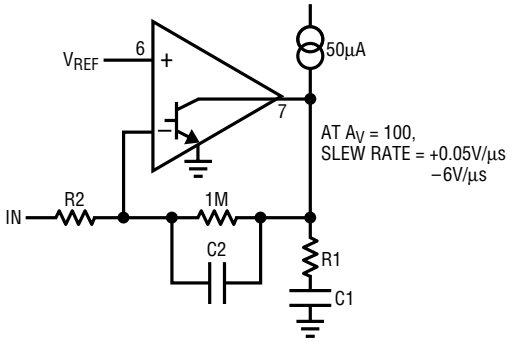

A_V	R1	C1	C2	R2
–1	33Ω	0.1µF	0.001µF	1M
–10	100Ω	0.047µF	–	100k
–100	10k	0.002µF	–	10k

1120A TA04

Current Limited 1 Amp Regulator

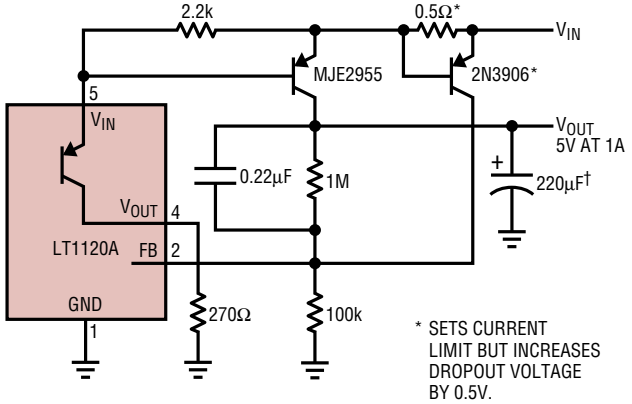

* SETS CURRENT LIMIT BUT INCREASES DROPOUT VOLTAGE BY 0.5V.

† MUST HAVE LOW ESR. SEVERAL 100µF CAPACITORS CAN BE PARALLELED.

1120A TA06

Battery Backup Regulator

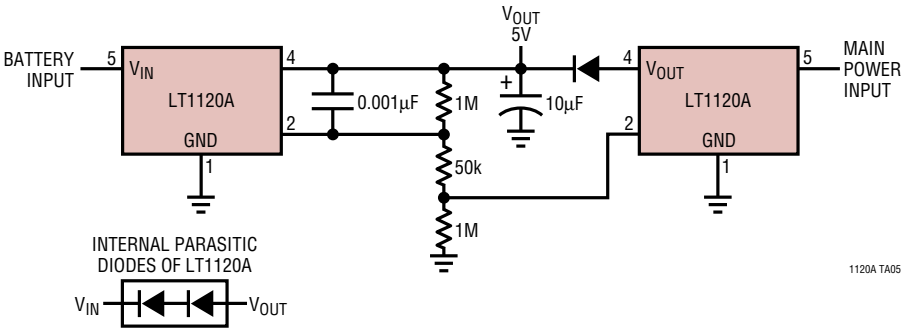

Information furnished by Linear Technology Corporation is believed to be accurate and reliable. However, no responsibility is assumed for its use. Linear Technology Corporation makes no representation that the interconnection of its circuits as described herein will not infringe on existing patent rights.

PACKAGE DESCRIPTION

N8 Package
8-Lead PDIP (Narrow .300 Inch)
(Reference LTC DWG # 05-08-1510)

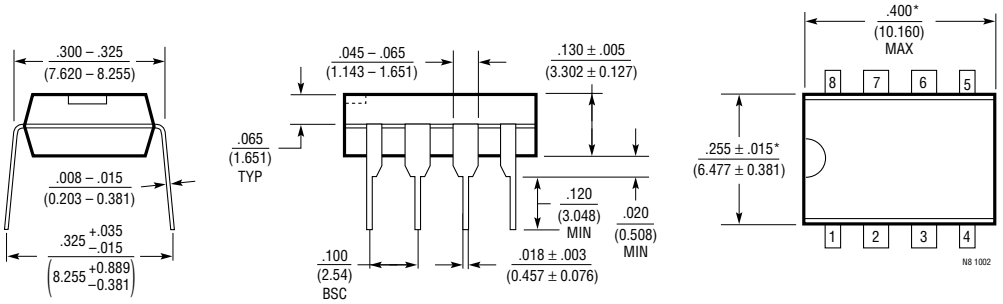

NOTE:
1. DIMENSIONS ARE $\frac{\text{INCHES}}{\text{MILLIMETERS}}$
*THESE DIMENSIONS DO NOT INCLUDE MOLD FLASH OR PROTRUSIONS.
MOLD FLASH OR PROTRUSIONS SHALL NOT EXCEED .010 INCH (0.254mm)

S8 Package
8-Lead Plastic Small Outline (Narrow .150 Inch)
(Reference LTC DWG # 05-08-1610)

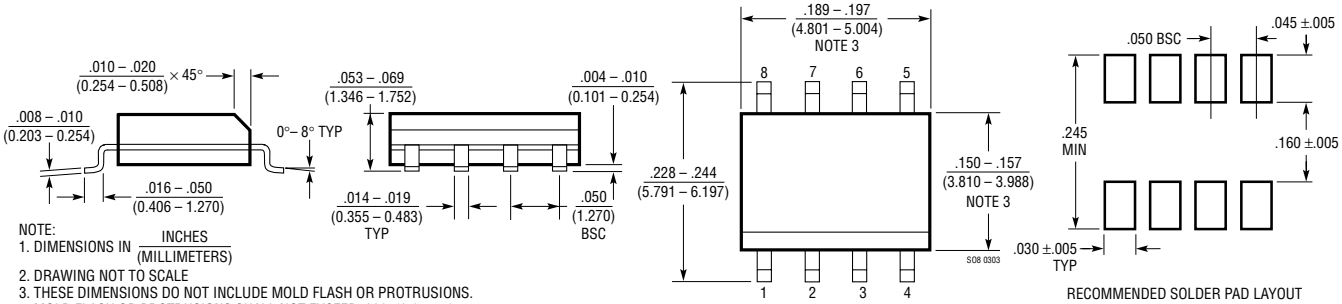

NOTE:
1. DIMENSIONS IN $\frac{\text{INCHES}}{\text{(MILLIMETERS)}}$
2. DRAWING NOT TO SCALE
3. THESE DIMENSIONS DO NOT INCLUDE MOLD FLASH OR PROTRUSIONS.
MOLD FLASH OR PROTRUSIONS SHALL NOT EXCEED .006" (0.15mm)

RELATED PARTS

PART NUMBER	DESCRIPTION	COMMENTS
LT1761/LT1762	100mA/150mA, Low Noise Micropower, LDO	V_{IN}: 1.8V to 20V; $V_{OUT(MIN)}$ = 1.22V; Dropout Voltage = 0.30V; I_Q = 20μA; I_{SD} < 1μA; V_{OUT} = Adj, 1.5V, 1.8V, 2V, 2.5V, 2.8V, 3V, 3.3V, 5V; ThinSOT™/MS8 Packages. Low Noise <20μV_{RMSP-P}
LT1763	500mA, Low Noise Micropower, LDO	V_{IN}: 1.8V to 20V; $V_{OUT(MIN)}$ = 1.22V; Dropout Voltage = 0.30V; I_Q = 30μA; I_{SD} < 1μA; V_{OUT} = 1.5V, 1.8V, 2.5V,3V, 3.3V, 5V; SO-8 Package. Low Noise <20μV_{RMSP-P}
LT1764/LT1764A	3A, Low Noise, Fast Transient Response, LDO	V_{IN}: 2.7V to 20V; $V_{OUT(MIN)}$ = 1.21V; Dropout Voltage = 0.34V; I_Q = 1mA; I_{SD} < 1μA; V_{OUT} = 1.8V, 2.5V, 3.3; DD, TO220, Packages. Low Noise <40μV_{RMSP-P}, "A" Version Stable with Ceramic Capacitors
LT1962	300mA, Low Noise Micropower, LDO	V_{IN}: 1.8V to 20V; $V_{OUT(MIN)}$ = 1.22V; Dropout Voltage = 0.27V; I_Q = 30μA; I_{SD} < 1μA; V_{OUT} = 1.5V, 1.8V, 2.5V,3V, 3.3V, 5V; MS8 Package. Low Noise <20μV_{RMSP-P}
LT1963/LT1963A	1.5A, Low Noise, Fast Transient Response, LDO	V_{IN}: 2.1V to 20V; $V_{OUT(MIN)}$ = 1.21V; Dropout Voltage = 34V; I_Q = 1mA; I_{SD} < 1μA; V_{OUT} = 1.5V 1.8V, 2.5V, 3.3; DD, TO220, SOT-223, SO-8 Packages. Low Noise <40μV_{RMSP-P}, "A" Version Stable with Ceramic Capacitors
LT1964	200mA, Low Noise Micropower Negative, LDO	V_{IN}: –0.9V to –20V; $V_{OUT(MIN)}$ = –1.21V; Dropout Voltage = 0.34V; I_Q = 30μA; I_{SD} < 3μA; V_{OUT} = Adj, –5V; ThinSOT Package. Low Noise <30μV_{RMSP-P}, Stable with Ceramic Capacitors
LT3010	80V, 50mA, Low Noise Linear Regulator	V_{IN}: 1.5V to 80V; $V_{OUT(MIN)}$ = 1.28V; Dropout Voltage = 0.30V; I_Q = 30μA; I_{SD} < 1μA; V_{OUT} = Adj, –5V; MS8E Package. Low Noise <100μV_{RMSP-P}, Stable with Ceramic Capacitors

ThinSOT is a trademark of Linear Technology Corporation.

Linear Technology Corporation
1630 McCarthy Blvd., Milpitas, CA 95035-7417
(408) 432-1900 • FAX: (408) 434-0507 • www.linear.com
LT/TP 0104 1K REV A • PRINTED IN USA
© LINEAR TECHNOLOGY CORPORATION 1994