4.5A Monolithic LED Drivers with True Color PWM Dimming

FEATURES

- **True Color PWM™ Dimming Delivers Constant LED Color with Up to 3000:1 Range**
- **Wide Input Voltage Range: 2.8V to 36V**
- **4.5A, 60mΩ, 42V Internal Switch**
- **Drives LEDs in Boost, Buck-Boost or Buck Modes**
- **Integrated Resistors for Inductor and LED Current Sensing**
- **Program LED Current:**
  100mA to 1050mA (LT3478-1)
  (10mV to 105mV)/R_{SENSE} (LT3478)
- **Program LED Current De-Rating vs Temperature**
- **Separate Inductor Supply Input**
- Inrush Current Protection
- Programmable Soft-Start
- Fixed Frequency Operation from 200kHz to 2.25MHz
- Open LED Protection (Programmable OVP)
- Accurate Shutdown/UVLO Threshold with Programmable Hysteresis
- 16-Pin Thermally Enhanced TSSOP Package

APPLICATIONS

- High Power LED Driver
- Automotive Lighting

LT, LT, LTC and LTM are registered trademarks of Linear Technology Corporation. All other trademarks are the property of their respective owners. Patents Pending.

DESCRIPTION

The LT®3478/LT3478-1 are 4.5A step-up DC/DC converters designed to drive LEDs with a constant current over a wide programmable range. Series connection of the LEDs provides identical LED currents for uniform brightness without the need for ballast resistors and expensive factory calibration.

The LT3478-1 reduces external component count and cost by integrating the LED current sense resistor. The LT3478 uses an external sense resistor to extend the maximum programmable LED current beyond 1A and also to achieve greater accuracy when programming low LED currents. Operating frequency can be set with an external resistor from 200kHz up to 2.25MHz. Unique circuitry allows a PWM dimming range up to 3000:1 while maintaining constant LED color. The LT3478/LT3478-1 are ideal for high power LED driver applications such as automotive TFT LCD backlights, courtesy lighting and heads-up displays. One of two CTRL pins can be used to program maximum LED current. The other CTRL pin can be used to program a reduction in maximum LED current vs temperature to maximize LED usage and improve reliability.

Additional features include inrush current protection, programmable open LED protection and programmable soft-start. Each part is available in a 16-pin thermally enhanced TSSOP Package.

TYPICAL APPLICATION

Automotive TFT LCD Backlight

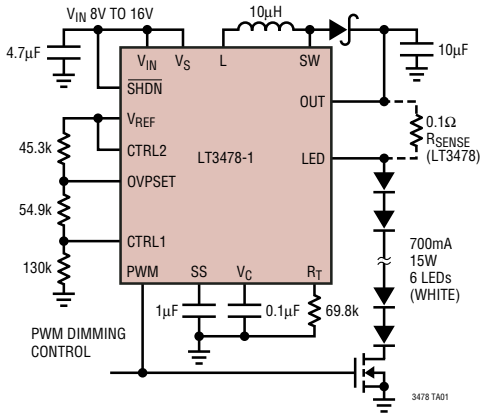

Efficiency vs V_{IN}

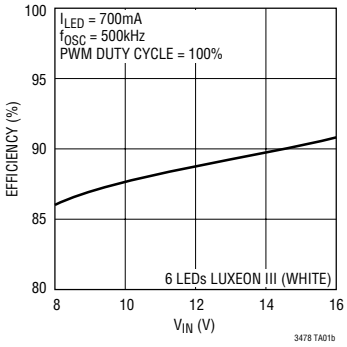

ABSOLUTE MAXIMUM RATINGS

(Note 1)

SW 42V
V_{OUT}, LED 42V
V_{IN}, V_S, V_L, $\overline{SHDN}$ (Note 5) 36V
PWM 15V
CTRL1, 2 ..... 6V
SS, R_T, V_C, V_{REF}, OVPSET 2V
Operating Junction Temperature Range
(Notes 2, 3, 4) ..... –40°C to 125°C
Storage Temperature Range ..... –65°C to 150°C
Lead Temperature (Soldering, 10 Sec) ..... 300°C

PACKAGE/ORDER INFORMATION

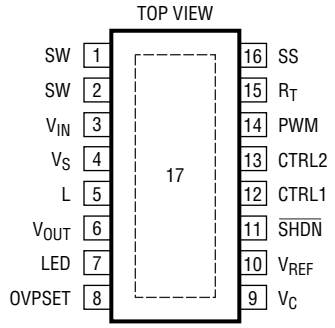

FE PACKAGE
16-LEAD PLASTIC TSSOP
T_{JMAX} = 125°C, θ_{JA} = 35°C/W
EXPOSED PAD (PIN 17) IS PGND, MUST BE SOLDERED TO PCB.

ORDER PART NUMBER	FE PART MARKING
LT3478EFE	3478FE
LT3478EFE-1	3478FE-1
LT3478IFE	3478FE
LT3478IFE-1	3478FE-1

Order Options Tape and Reel: Add #TR
Lead Free: Add #PBF Lead Free Tape and Reel: Add #TRPBF
Lead Free Part Marking: http://www.linear.com/leadfree/

Consult LTC Marketing for parts specified with wider operating temperature ranges.

ELECTRICAL CHARACTERISTICS

The ● denotes the specifications which apply over the full operating temperature range, otherwise specifications are at T_A = 25°C. SW = open, V_{IN} = V_S = L = V_{OUT} = $\overline{SHDN}$ = 2.7V, LED = open, SS = open, PWM = CTRL1, CTRL2 = 1.25V, V_{REF} = open, V_C = open, R_T = 31.6k.

PARAMETER	CONDITIONS		MIN	TYP	MAX	UNITS
Minimum Operating Voltage	(Rising)	●		2.4	2.8	V
Operational Input Voltage	V_S V_{IN} (Note 5)		2.8 2.8		36 36	V V
V_{IN} Quiescent Current	V_C = 0V (No Switching)			6.1		mA
V_{IN} Shutdown Current	$\overline{SHDN}$ = 0V			3	6	µA
$\overline{SHDN}$ Pin Threshold ($V_{SD_\mu p}$)	(Micropower)	●	0.1	0.4	0.7	V
$\overline{SHDN}$ Pin Threshold (V_{SD_UVLO})	(Switching)		1.3	1.4	1.5	V
$\overline{SHDN}$ Pin Current	$\overline{SHDN}$ = V_{SD_UVLO} – 50mV $\overline{SHDN}$ = V_{SD_UVLO} + 50mV		8	10 0	12	µA µA
V_{REF} Voltage	I(V_{REF}) = 0µA, V_C = 0V	●	1.213	1.240	1.263	V
V_{REF} Line Regulation	I(V_{REF}) = 0µA, 2.7V < V_{IN} < 36V			0.005	0.015	%/V
V_{REF} Load Regulation	0 < I(V_{REF}) < 100µA (Max)			8	12	mV
Frequency: f_{OSC} 200kHz	R_T = 200k		0.18	0.2	0.22	MHz
Frequency: f_{OSC} 1MHz	R_T = 31.6k	●	0.88		1.12	MHz

ELECTRICAL CHARACTERISTICS

The ● denotes the specifications which apply over the full operating temperature range, otherwise specifications are at T_A = 25°C. SW = open, V_{IN} = V_S = L = V_{OUT} = $\overline{SHDN}$ = 2.7V, LED = open, SS = open, PWM = CTRL1, CTRL2 = 1.25V, V_{REF} = open, V_C = open, R_T = 31.6k.

PARAMETER	CONDITIONS		MIN	TYP	MAX	UNITS
Frequency: f_{OSC} 2.25MHz	R_T = 9.09k		2	2.25	2.6	MHz
Line Regulation f_{OSC}	R_T = 31.6k, 2.7V < V_{IN} < 36V			0.05	0.2	%/V
Nominal R_T Pin Voltage				0.64		V
Maximum Duty Cycle	R_T = 31.6k R_T = 200k R_T = 9.09k	●	80	88 97 73		% % %
LED Current to V_C Current Gain	(Note 6)			770		μA/A
LED Current to V_C Voltage Gain	(Note 6)			400		V/A
V_C to Switch Current Gain				13		A/V
V_C Source Current (Out of Pin)	CTRL1 = 0.4V, V_C = 1V			40		μA
V_C Sink Current	CTRL1 = 0V, V_C = 1V			40		μA
V_C Switching Threshold				0.65		V
V_C High Level (V_{OH})	CTRL1 = 0.4V			1.5		V
V_C Low Level (V_{OL})	CTRL1 = 0V			0.2		V
Inductor Current Limit	2.7V < V_S < 36V	●	4.5	6	6.8	A
Switch Current Limit		●	4.5	6.3	7.5	A
Switch V_{CE} SAT	I_{SW} = 4.5A			270		mV
Switch Leakage Current	SW = 42V, V_C = 0V			1		μA
V_{OUT} Overvoltage Protection (OVP) (Rising)	OVPSET = 1V OVPSET = 0.3V			41 12.3		V V
Full Scale LED Current (LT3478-1)	CTRL1 = V_{REF}, Current Out of LED Pin		1010	1050	1090	mA
700mA LED Current (LT3478-1)	CTRL1 = 700mV, Current Out of LED Pin	●	655	700	730	mA
350mA LED Current (LT3478-1)	CTRL1 = 350mV, Current Out of LED Pin		325	350	375	mA
100mA LED Current (LT3478-1)	CTRL1 = 100mV, Current Out of LED Pin		70	100	130	mA
Full Scale LED Current V_{SENSE} (LT3478)	CTRL1 = V_{REF}, V_{SENSE} = V_{VOUT} – V_{LED}		101	105	109	mV
CTRL1 = 700mV, V_{SENSE} (LT3478)	CTRL1 = 700mV, V_{SENSE} = V_{VOUT} – V_{LED}	●	67	70.5	74	mV
CTRL1 = 350mV, V_{SENSE} (LT3478)	CTRL1 = 350mV, V_{SENSE} = V_{VOUT} – V_{LED}		33	35.5	38	mV
CTRL1 = 100mV, V_{SENSE} (LT3478)	CTRL1 = 100mV, V_{SENSE} = V_{VOUT} – V_{LED}		7	10	13	mV
CTRL1, 2 Input Currents	CTRL1 = 100mV, CTRL2 = 1.25V or CTRL2 = 100mV, CTRL1 = 1.25V (Current Out of Pin)			40		nA
OVPSET Input Current	OVPSET = 1V, V_{OUT} = 41V (Current Out of Pin)			200		nA
PWM Switching Threshold			0.8	1	1.2	V
V_C Pin Current in PWM Mode	V_C = 1V, PWM = 0			1	50	nA
OUT Pin Current in PWM Mode	PWM = 0			1	100	nA
SS Low Level (V_{OL})	$I_{(SS)}$ = 20μA			0.15		V
SS Reset Threshold	V_C = 0V			0.25		V
SS High Level (V_{OH})	V_C = 0V			1.5		V
Soft-Start (SS) Pin Charge Current	SS = 1V, Current Out of Pin, V_C = 0V			12		μA
Soft-Start (SS) Pin Discharge Current	SS = 0.5V, V_C = 0V			350		μA

ELECTRICAL CHARACTERISTICS

Note 1: Stresses beyond those listed under Absolute Maximum Ratings may cause permanent damage to the device. Exposure to any Absolute Maximum Rating condition for extended periods may affect device reliability and lifetime.

Note 2: The LT3478EFE/LT3478EFE-1 are guaranteed to meet performance specifications from 0°C to 125°C junction temperature. Specifications over the –40°C to 125°C operating junction temperature range are assured by design, characterization and correlation with statistical process controls. The LT3478IFE/LT3478IFE-1 are guaranteed over the full –40°C to 125°C operating junction temperature range.

Note 3: This IC includes over-temperature protection that is intended to protect the device during momentary overload conditions. Junction temperature will exceed 125°C when over-temperature protection is active. Continuous operation above the specified maximum operating junction temperature may impair device reliability.

Note 4: For maximum operating ambient temperature, see the "Thermal Calculations" section in the Applications Information section.

Note 5: The maximum operational voltage for V_{IN} is limited by thermal and efficiency considerations. Power switch base current is delivered from V_{IN} and should therefore be driven from the lowest available power supply in the system. See "Thermal Calculations" in the Applications Information section.

Note 6: For LT3478, parameter scales • (R_{SENSE}/0.1Ω).

TYPICAL PERFORMANCE CHARACTERISTICS

LED Current vs CTRL1

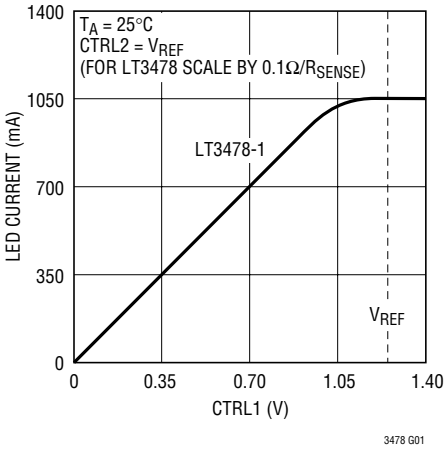

LED Current vs Temperature

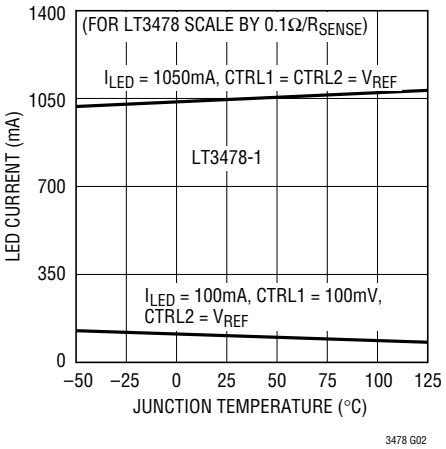

LED Current vs PWM Duty Cycle Wide PWM Dimming Range (3000:1)

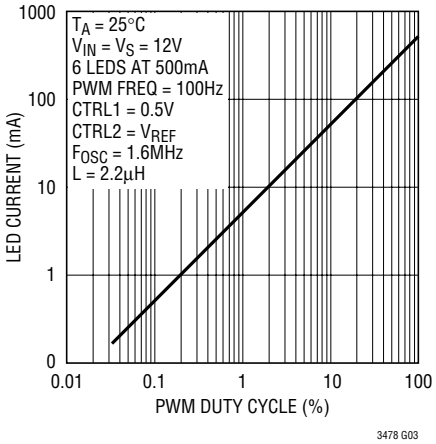

CTRL1 Pin Current vs Temperature

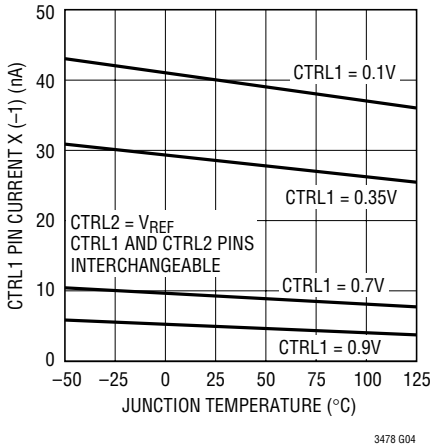

Switch V_{CE} (SAT) vs Switch Current

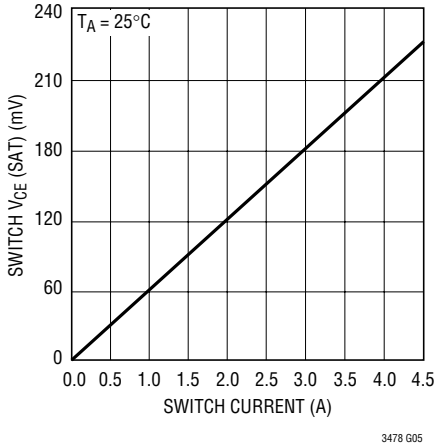

Switch and Inductor Peak Current Limits vs Temperature

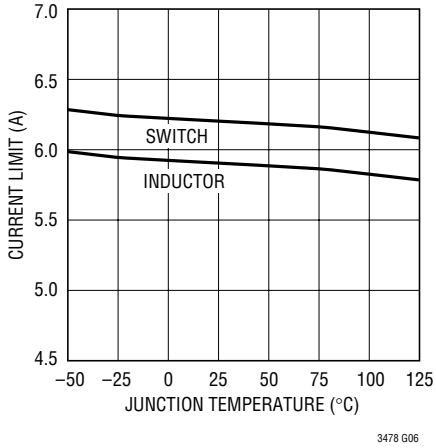

TYPICAL PERFORMANCE CHARACTERISTICS

V_{REF} vs Temperature

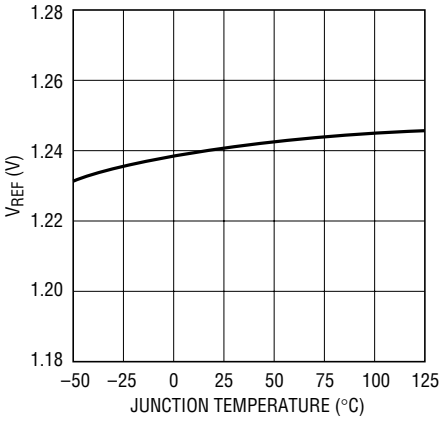

3478 G07

$\overline{SHDN}$ Threshold vs Temperature

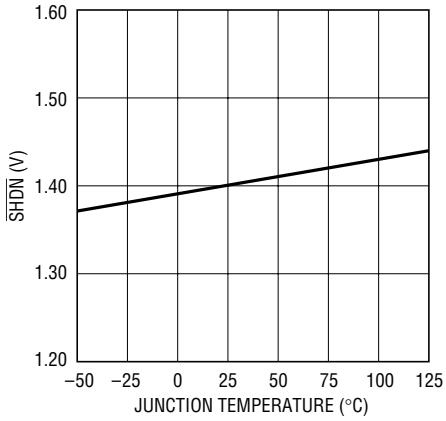

3478 G08

$\overline{SHDN}$ Pin (Hysteresis) Current vs Temperature

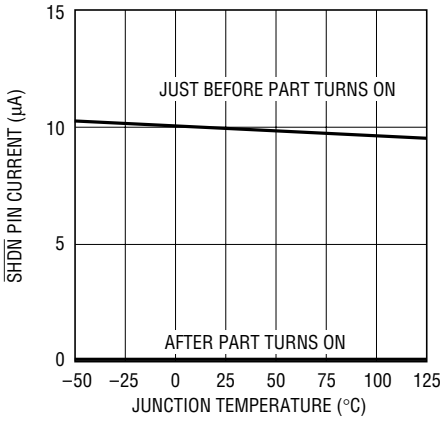

3478 G09

V_{IN} Shutdown Current vs Temperature

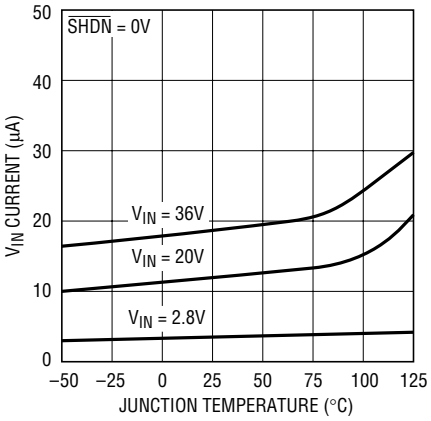

3478 G10

V_{IN} Quiescent Current vs V_{IN}

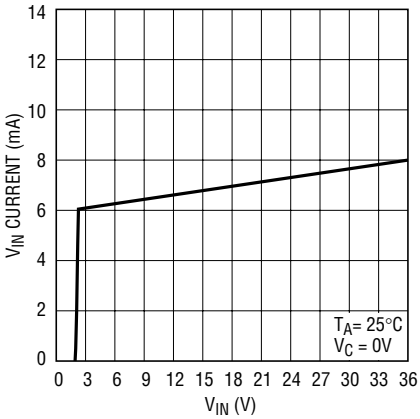

3478 G11

V_{IN} Quiescent Current vs Temperature

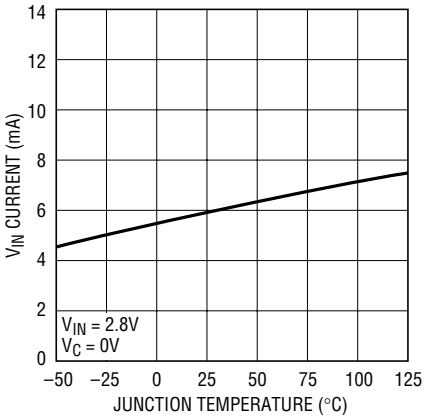

3478 G12

V_S, L, SW Shutdown Currents vs Temperature

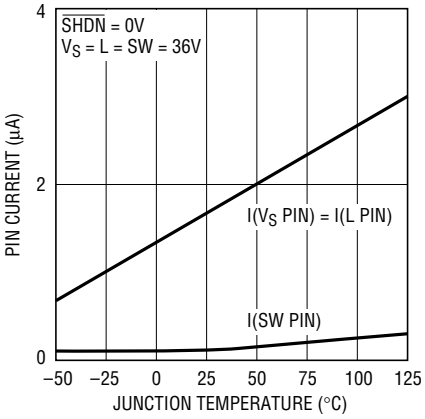

3478 G18

Switch Peak Current Limit vs Duty Cycle

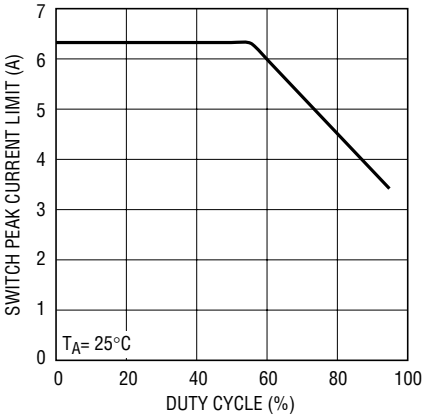

3478 G19

TYPICAL PERFORMANCE CHARACTERISTICS

Switching Frequency vs R_T

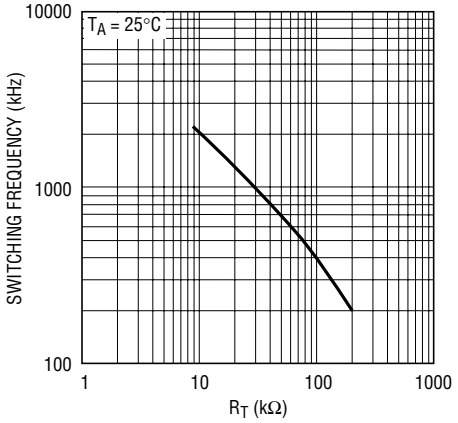

3478 G13

Switching Frequency vs Temperature

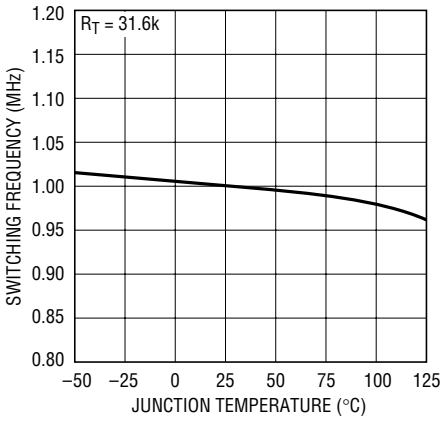

3478 G14

Open-Circuit Output Clamp Voltage vs Temperature

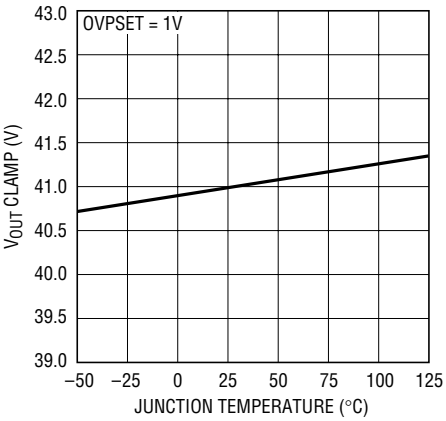

3478 G15

SS Pin Charge Current vs Temperature

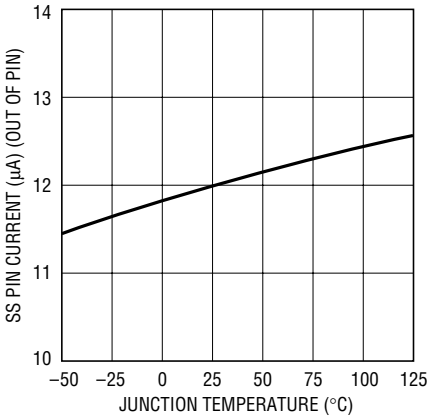

3478 G16

V_C Pin Active and Clamp Voltages vs Temperature

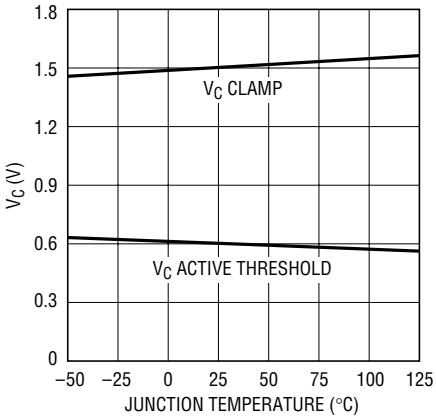

3478 G17

PIN FUNCTIONS

SW (Pins 1, 2): Switch Pin. Collector of the internal NPN power switch. Both pins are fused together inside the IC. Connect the inductor and diode here and minimize the metal trace area connected to this pin to minimize EMI.

V_{IN} (Pin 3): Input Supply. Must be locally bypassed with a capacitor to ground.

V_S (Pin 4): Inductor Supply. Must be locally bypassed with a capacitor to ground. Can be shorted to V_{IN} if only one supply is available (see L (Pin 5) function).

L (Pin 5): Inductor Pin. An internal resistor between V_S and L pins monitors inductor current to protect against inrush current. Exceeding 6A immediately turns off the internal NPN power switch and discharges the soft-start pin. Input current monitoring can be disabled by connecting the inductor power supply directly to the L pin and leaving the V_S pin open (requires local bypass capacitor to GND on L pin; not V_S pin).

V_{OUT} (Pin 6): Output voltage of the converter. Connect a capacitor from this pin to ground. Internal circuitry monitors V_{OUT} for protection against open LED faults.

LED (Pin 7): Connect the LED string from this pin to ground. An internal (LT3478-1)/external (LT3478) resistor between the V_{OUT} and LED pins senses LED current for accurate control.

OVPSET (Pin 8): Programs V_{OUT} overvoltage protection level (OVP) to protect against open LED faults. OVP = (OVPSET • 41)V. OVPSET range is 0.3V to 1V for an OVP range of typically 12.3V to 41V.

V_C (Pin 9): Output of the transconductance error amplifier and compensation pin for the converter regulation loop.

V_{REF} (Pin 10): Bandgap Voltage Reference. This pin can supply up to 100µA. Can be used to program CTRL1, CTRL2, OVPSET pin voltages using resistor dividers to ground.

$\overline{SHDN}$ (Pin 11): The $\overline{SHDN}$ pin has an accurate 1.4V threshold and can be used to program an undervoltage lockout (UVLO) threshold for system input supply using a resistor divider from supply to ground. A 10µA pin current hysteresis allows programming of undervoltage lockout (UVLO) hysteresis. $\overline{SHDN}$ above 1.4V turns the part on and removes a 10µA sink current from the pin. $\overline{SHDN}$ = 0V reduces V_{IN} current < 3µA. $\overline{SHDN}$ can be directly connected to V_{IN}. If left open circuit the part will be turned off.

CTRL1 (Pin 12): CTRL1 pin voltage is used to program maximum LED current (CTRL2 = V_{REF}). CTRL1 voltage can be set by a resistor divider from V_{REF} or an external voltage source. Maximum LED current is given by:

(LT3478-1) Max LED Current = Min(CTRL1, 1.05) Amps

(LT3478) Max LED Current =

$$\text{Min(CTRL, 1.05)} \bullet \frac{0.1}{R_{SENSE}} \text{ Amps}$$

(linear for 0.1V < CTRL1 < 0.95V ; CTRL2 = V_{REF}) For maximum LED current, short CTRL1 and CTRL2 pins to V_{REF}.

CTRL2 (Pin 13): The CTRL2 pin is available for programming a decrease in LED current versus temperature (setting temperature breakpoint and slope). This feature allows the output LED(s) to be programmed for maximum allowable current without damage at higher temperatures. This maximizes LED usage and increases reliability. A CTRL2 voltage with negative temperature coefficient is created using an external resistor divider from V_{REF} with temperature dependant resistance. If not used, CTRL2 should be tied to V_{REF}.

PWM (Pin 14): Input pin for PWM dimming control. Above 1V allows converter switching and below 1V disables switching with V_C pin level maintained. With an external MOSFET placed in series with the ground side of the LED string, a PWM signal driving the PWM pin and MOSFET gate provides accurate dimming control. The PWM signal can be driven from 0V to 15V. If unused, the pin should be connected to V_{REF}.

R_T (Pin 15): A resistor to ground programs switching frequency between 200kHz and 2.25MHz.

SS (Pin 16): Soft-Start Pin. Placing a capacitor here programs soft-start timing to limit inductor inrush current during start-up due to the converter. When inductor current

PIN FUNCTIONS

exceeds 6A or V_{OUT} exceeds OVP, an internal soft-start latch is set, the power NPN is immediately turned off and the SS pin is discharged. The soft-start latch is also set if V_{IN} and/or $\overline{SHDN}$ do not meet their turn on thresholds. The SS pin only recharges when all faults are removed and the pin has been discharged below 0.25V.

Exposed Pad (Pin 17): The ground for the IC and the converter. The FE package has an Exposed Pad underneath the IC which is the best path for heat out of the package. Pin 17 should be soldered to a continuous copper ground plane under the device to reduce die temperature and increase the power capability of the LT3478/LT3478-1.

BLOCK DIAGRAM

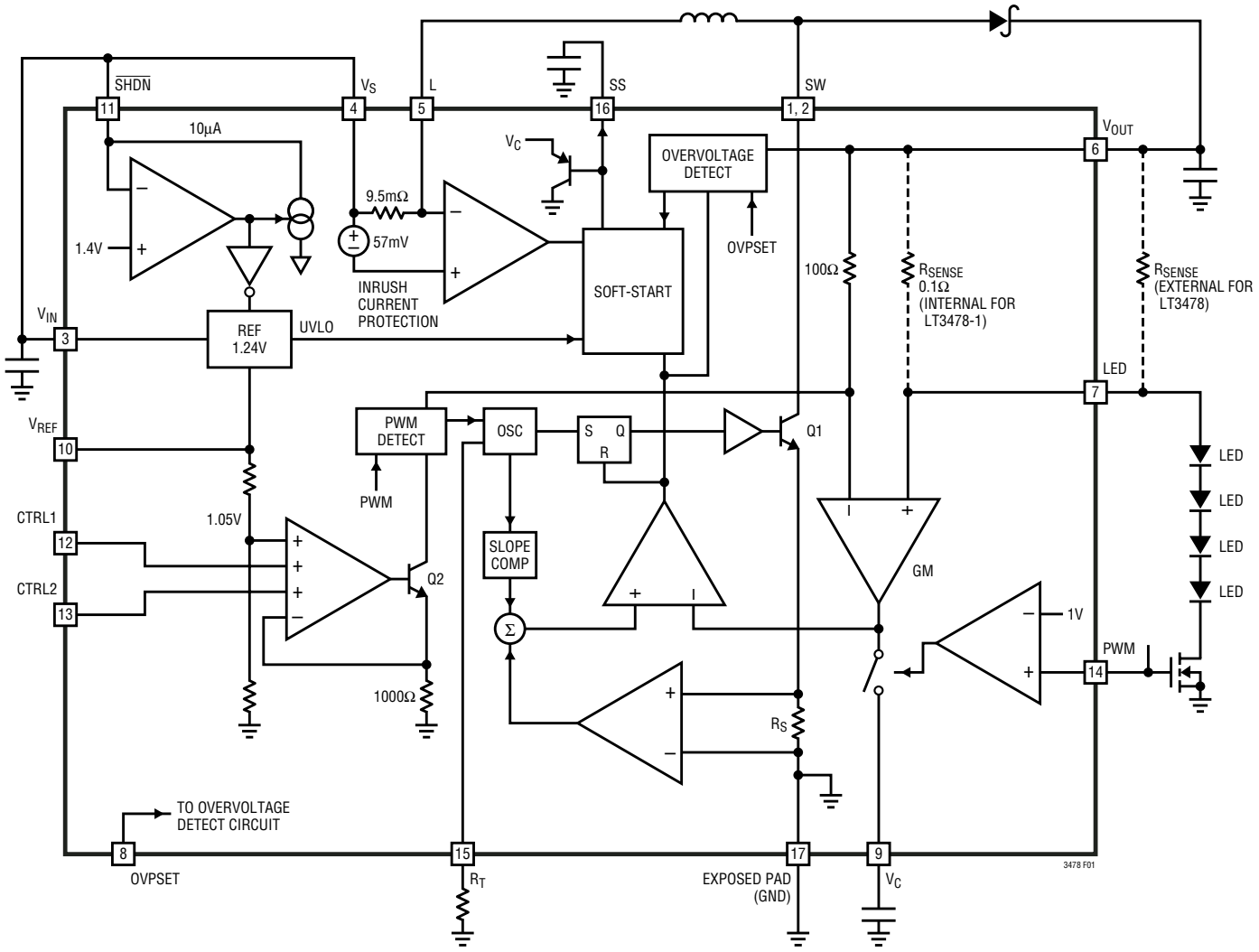

Figure 1

OPERATION

The LT3478/LT3478-1 are high powered LED drivers with a 42V, 4.5A internal switch and the ability to drive LEDs with up to 1050mA for LT3478-1 and up to 105mV/R_{SENSE} for LT3478.

The LT3478/LT3478-1 work similarly to a conventional current mode boost converter but use LED current (instead of output voltage) as feedback for the control loop. The Block Diagram in Figure 1 shows the major functions of the LT3478/LT3478-1.

For the part to turn on, the V_{IN} pin must exceed 2.8V and the $\overline{SHDN}$ pin must exceed 1.4V. The $\overline{SHDN}$ pin threshold allows programming of an undervoltage lockout (UVLO) threshold for the system input supply using a simple resistor divider. A 10µA current flows into the $\overline{SHDN}$ pin before part turn on and is removed after part turn on. This current hysteresis allows programming of hysteresis for the UVLO threshold. See "Shutdown Pin and Programming Undervoltage Lockout" in the Applications Information Section. For micropower shutdown the $\overline{SHDN}$ pin at 0V reduces V_{IN} supply current to approximately 3µA.

Each LED driver is a current mode step-up switching regulator. A regulation point is achieved when the boosted output voltage V_{OUT} across the output LED(s) is high enough to create current in the LED(s) equal to the programmed LED current. A sense resistor connected in series with the LED(s) provides feedback of LED current to the converter loop.

The basic loop uses a pulse from an internal oscillator to set the RS flip-flop and turn on the internal power NPN switch Q1 connected between the switch pin, SW, and ground. Current increases in the external inductor until switch current limit is exceeded or until the oscillator reaches its maximum duty cycle. The switch is then turned off, causing inductor current to lift the SW pin and turn on an external Schottky diode connected to the output. Inductor current flows via the Schottky diode charging the output capacitor. The switch is turned back on at the next reset cycle of the internal oscillator. During normal operation the V_C voltage controls the peak switch current limit and hence the inductor current available to the output LED(s). As with all current mode converters, slope compensation is added to the control path to ensure stability.

The CTRL1 pin is used to program maximum LED current via Q2. The CTRL2 pin can be used to program a decrease in LED current versus temperature for maximum reliability and utilization of the LED(s). A CTRL2 voltage with negative temperature coefficient can be created using an external resistor divider from V_{REF} with temperature dependant resistance. Unused CTRL2 is tied to V_{REF}.

For True Color PWM dimming, the LT3478/LT3478-1 provide up to a 3000:1 wide PWM dimming range by allowing the duty cycle of the PWM pin (connected to the IC and an external N-channel MOSFET in series with the LED(s)) to be reduced from 100% to as low as 0.033% for a PWM frequency of 100Hz. Dimming by PWM duty cycle, allows for constant LED color to be maintained over the entire dimming range.

For robust operation, the LT3478/LT3478-1 monitor system performance for any of the following faults : V_{IN} or $\overline{SHDN}$ pin voltages too low and/or inductor current too high and/or boosted output voltage too high. On detection of any of these faults, the LT3478/LT3478-1 stop switching immediately and a soft-start latch is set discharging the SS pin (see Timing Diagram for SS pin in Figure 11). All faults are detected internally and do not require external components. When all faults no longer exist, an internal 12µA supply charges the SS pin with a timing programmed using a single external capacitor. A gradual ramp up of SS pin voltage limits switch current during startup.

For optimum component sizing, duty cycle range and efficiency the LT3478/LT3478-1 allow for a separate inductor supply V_S and for switching frequency to be programmed from 200kHz up to 2.25MHz using a resistor from the R_T pin to ground. The advantages of these options are covered in the Applications Informations section.

APPLICATIONS INFORMATION

Inductor Selection

Several inductors that work well with the LT3478/LT3478-1 are listed in Table 1. However, there are many other manufacturers and inductors that can be used. Consult each manufacturer for more detailed information and their entire range of parts. Ferrite cores should be used to obtain the best efficiency. Choose an inductor that can handle the necessary peak current without saturating. Also ensure that the inductor has a low DCR (copper-wire resistance) to minimize I^2R power losses. Values between 4.7µH and 22µH will suffice for most applications.

Inductor manufacturers specify the maximum current rating as the current where inductance falls by a given percentage of its nominal value. An inductor can pass a current greater than its rated value without damaging it. Aggressive designs where board space is precious will exceed the maximum current rating of the inductor to save space. Consult each manufacturer to determine how the maximum inductor current is measured and how much more current the inductor can reliably conduct.

Capacitor Selection

Low ESR (equivalent series resistance) ceramic capacitors should be used at the output to minimize the output ripple voltage. Use only X5R or X7R dielectrics, as these materials retain their capacitance over wider voltage and temperature ranges than other dielectrics. A 4.7µF to 10µF output capacitor is sufficient for most high output current designs. Some suggested manufacturers are listed in Table 2.

Diode Selection

Schottky diodes, with their low forward voltage drop and fast switching speed, are ideal for LT3478/LT3478-1 applications. Table 3 lists several Schottky diodes that work well. The diode's average current rating must exceed the application's average output current. The diode's maximum reverse voltage must exceed the application's output voltage. A 4.5A diode is sufficient for most designs. For PWM dimming applications, be aware of the reverse leakage current of the diode. Lower leakage current will drain the output capacitor less, allowing for higher dimming range. The companies below offer Schottky diodes with high voltage and current ratings.

Table 1. Suggested Inductors

MANUFACTURER PART NUMBER	IDC (A)	INDUCTANCE (µH)	MAX DCR (mΩ)	L × W × H (mm)	MANUFACTURER
CDRH104R-100NC	3.8	10	35	10.5 × 10.3 × 4.0	Sumida
CDRH103RNP-4R7NC-B	4	4.7	30	10.5 × 10.3 × 3.1	www.sumida.com
CDRH124R-100MC	4.5	10	28	12.3 × 12.3 × 4.5	
CDRH104R-5R2NC	5.5	5.2	22	10.5 × 10.3 × 4.0	
FDV0630-4R7M	4.2	4.7	49	7.0 × 7.7 × 3.0	Toko www.toko.com
UP4B-220	7.6	22	34	22 × 15 × 7.9	Cooper www.cooperet.com

Table 2. Ceramic Capacitor Manufacturers

MANUFACTURER	PHONE NUMBER	WEB
Taiyo Yuden	(408) 573-4150	www.t-yuden.com
AVX	(803) 448-9411	www.avxcorp.com
Murata	(714) 852-2001	www.murata.com

Table 3. Suggested Diodes

MANUFACTURER PART NUMBER	MAX CURRENT (A)	MAX REVERSE VOLTAGE	WEB
UPS340	3	40	Microsemi www.microsemi.com
B520C	5	30	Diodes, Inc.
B530C	5	30	www.diodes.com
B340A	3	40	
B540C	5	40	
PDS560	5	60	

APPLICATIONS INFORMATION

Shutdown and Programming Undervoltage Lockout

The LT3478/LT3478-1 have an accurate 1.4V shutdown threshold at the $\overline{SHDN}$ pin. This threshold can be used in conjunction with a resistor divider from the system input supply to define an accurate undervoltage lockout (UVLO) threshold for the system (Figure 2). $\overline{SHDN}$ pin current hysteresis allows programming of hysteresis voltage for this UVLO threshold. Just before part turn on, 10µA flows into the $\overline{SHDN}$ pin. After part turn on, 0µA flows from the $\overline{SHDN}$ pin. Calculation of the on/off thresholds for a system input supply using the LT3478/LT3478-1 $\overline{SHDN}$ pin can be made as follows:

$$V_{SUPPLY}\ OFF = 1.4\ [1 + R1/R2)]$$

$$V_{SUPPLY}\ ON = V_{SUPPLY}\ OFF + (10\mu A \bullet R1)$$

An open drain transistor can be added to the resistor divider network at the $\overline{SHDN}$ pin to independently control the turn off of the LT3478/LT3478-1.

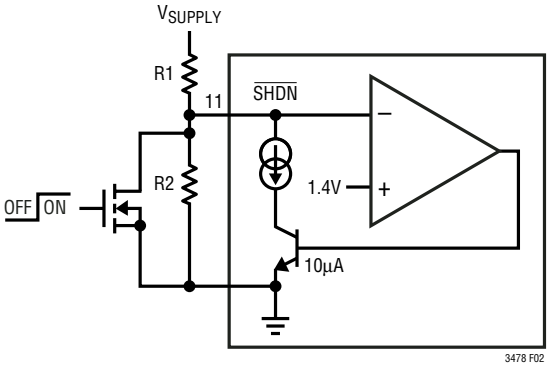

Figure 2. Programming Undervoltage Lockout (UVLO) with Hysteresis

With the $\overline{SHDN}$ pin connected directly to the V_{IN} pin, an internal undervoltage lockout threshold exists for the V_{IN} pin (2.8V max). This prevents the converter from operating in an erratic mode when supply voltage is too low. The LT3478/LT3478-1 provide a soft-start function when recovering from such faults as $\overline{SHDN}$ <1.4V and/or V_{IN} <2.8V. See details in the Applications Information section "Soft-Start".

Programming Switching Frequency

The switching frequency is programmed using an external resistor (R_T) connected between the R_T pin and ground. The internal free-running oscillator is programmable between 200kHz and 2.25MHz. Table 4 shows the typical R_T values required for a range of switching frequencies.

Selecting the optimum switching frequency depends on several factors. Inductor size is reduced with higher frequency but efficiency drops due to higher switching losses. In addition, some applications require very high duty cycles to drive a large number of LEDs from a low supply. Low switching frequency allows a greater operational duty cycle and hence a greater number of LEDs to be driven. In each case the switching frequency can be tailored to provide the optimum solution. When programming the switching frequency the total power losses within the IC should be considered. See "Thermal Calculations" in the Applications Information section.

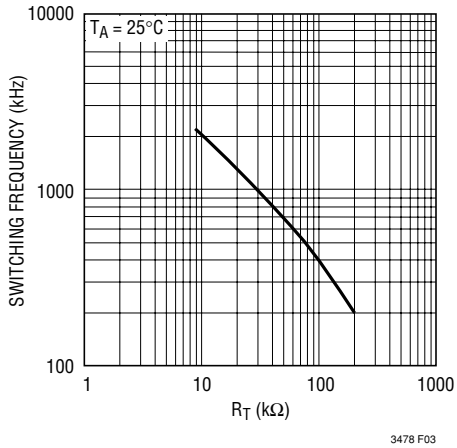

Figure 3. Switching Frequency vs R_T Resistor Value

Table 4. Switching Frequencies vs R_T Values

SWITCHING FREQUENCY (MHz)	R_T (kΩ)
2.25	9.09
1	31.6
0.2	200

APPLICATIONS INFORMATION

Programming Maximum LED current

Maximum LED current can be programmed using the CTRL1 pin with CTRL2 tied to the V_{REF} pin (see Figures 4 and 5). The maximum allowed LED current is defined as:

(LT3478-1) Max LED Current = Min(CTRL1, 1.05) Amps

(LT3478) Max LED Current =

$$\text{Min}(\text{CTRL1}, 1.05) \bullet \frac{0.1}{R_{SENSE}} \text{ Amps}$$

LED current vs CTRL1 is linear for approximately

$0.1V < CTRL1 < 0.95V$

For maximum possible LED current, connect CTRL1 and CTRL2 to the V_{REF} pin.

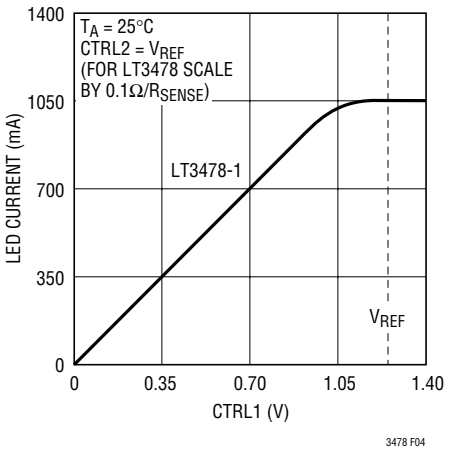

Figure 4. LED Current vs CTRL1 Voltage

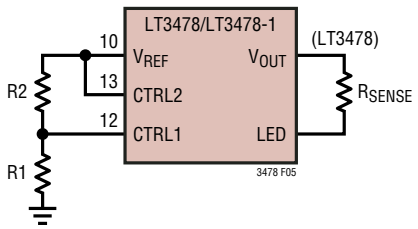

Figure 5. Programming LED Current

Programming LED Current Derating vs Temperature

A useful feature of the LT3478/LT3478-1 is the ability to program a derating curve for maximum LED current versus temperature. LED data sheets provide curves of maximum allowed LED current versus temperature to warn against exceeding this current limit and damaging the LED (Figure 6).

Luxeon V (Maximum) and LT3478-1 (Programmed) Current Derating Curves vs Temperature

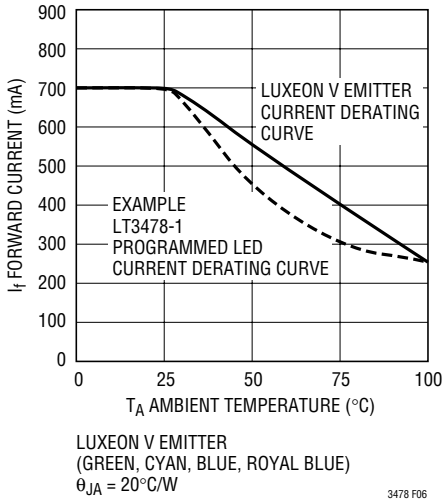

Figure 6. LED Current Derating Curve vs Ambient Temperature

Without the ability to back off LED current as temperature increases, many LED drivers are limited to driving the LED(s) at only 50% or less of their maximum rated currents. This limitation requires more LEDs to obtain the intended brightness for the application. The LT3478/LT3478-1 allow the output LED(s) to be programmed for maximum allowable current while still protecting the LED(s) from excessive currents at high temperature. This is achieved by programming a voltage at the CTRL2 pin with a negative temperature coefficient using a resistor divider with temperature dependent resistance (Figures 7 and 8). CTRL2 voltage is programmed higher than CTRL1 voltage. This allows initial LED current to be defined by CTRL1. As temperature increases, CTRL2 voltage will fall below CTRL1 voltage causing LED currents to be controlled by CTRL2 pin voltage. The choice of resistor ratios and use of temperature dependent resistance in the divider for the CTRL2 pin will define the LED current curve breakpoint and slope versus temperature (Figure 8).

A variety of resistor networks and NTC resistors with different temperature coefficients can be used for programming

APPLICATIONS INFORMATION

CTRL2 to achieve the desired CTRL2 curve vs temperature. The current derating curve shown in Figure 6 uses the resistor network shown in option C of Figure 7.

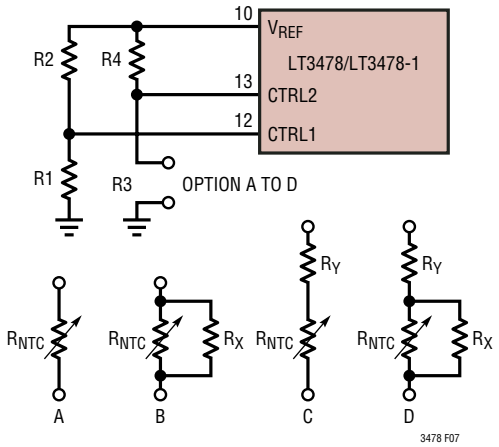

Figure 7. Programming LED Current Derating Curve vs Temperature (R_{NTC} Located on LEDs PCB)

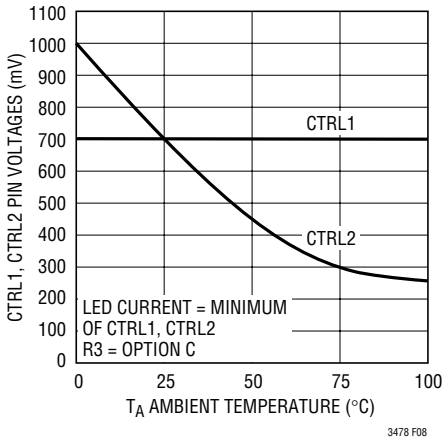

Figure 8. CTRL1, 2 Programmed Voltages vs Temperature

Table 5 shows a list of manufacturers/distributors of NTC resistors. There are several other manufacturers available and the chosen supplier should be contacted for more detailed information. To use an NTC resistor to indicate LED temperature it is only effective if the resistor is connected as close as possible to the LED(s). LED derating curves shown by manufacturers are listed for ambient temperature. The NTC resistor should be submitted to the same ambient temperature as the LED(s). Since the temperature dependency of an NTC resistor can be non-linear over a wide range of temperatures it is important to obtain a resistor's exact values over temperature from the manufacturer. Hand calculations of CTRL2 voltage can then be performed at each given temperature and the resulting CTRL2 curve plotted versus temperature. Several iterations of resistor value calculations may be required to achieve the desired breakpoint and slope of the LED current derating curve.

Table 5. NTC Resistor Manufacturers/Distributors

MANUFACTURER	
Murata Electronics North America	www.murata.com
TDK Corporation	www.tdk.com
Digi-key	www.digikey.com

If calculation of CTRL2 voltage at various temperatures gives a downward slope that is too strong, alternative resistor networks can be chosen (B, C, D in Figure 7) which use temperature independent resistance to reduce the effects of the NTC resistor over temperature.

Murata Electronics provides a selection of NTC resistors with complete data over a wide range of temperatures. In addition, a software tool is available which allows the user to select from different resistor networks and NTC resistor values and then simulate the exact output voltage curve (CTRL2 behavior) over temperature. Referred to as the 'Murata Chip NTC Thermistor Output Voltage Simulator', users can log onto www.murata.com/designlib and download the software followed by instructions for creating an output voltage V_{OUT} (CTRL2) from a specified V_{CC} supply (V_{REF}). At any time during selection of circuit parameters the user can access data on the chosen NTC resistor by clicking on a link to the Murata catalog.

The following example uses hand calculations to derive the resistor values required for CTRL1 and CTRL2 pin voltages to achieve a given LED current derating curve. The resistor values obtained using the Murata simulation tool are also provided and were used to create the derating curve shown in Figure 6. The simulation tool illustrates the non-linear nature of the NTC resistor temperature coefficient at temperatures exceeding 50°C ambient. In addition, the resistor divider technique using an NTC resistor to derive CTRL2 voltage inherently has a flattening characteristic (reduced downward slope) at higher temperatures. To avoid LED current exceeding a maximum

APPLICATIONS INFORMATION

allowed level at higher temperatures, the CTRL2 voltage curve may require a greater downward slope between 25°C and 50°C to compensate for that loss of slope at higher temperatures.

Example: Calculate the resistor values required for generating CTRL1 and CTRL2 from V_{REF} based on the following requirements:

(a) I_{LED} = 700mA at 25°C

(b) I_{LED} derating curve breakpoint occurs at 25°C

(c) I_{LED} derating curve has a slope of –200mA/25°C between 25°C and 50°C ambient temperature

Step1: Choose CTRL1 = 700mV for I_{LED} = 700mA

$CTRL1 = V_{REF}/(1 + R2/R1)$

$R2 = R1 \bullet [(V_{REF}/CTRL1) – 1]$

For V_{REF} = 1.24V and choosing R1 = 22.1k,

$R2 = 22.1k\ [(1.24/0.7) – 1]$

R2 = 17k (choose 16.9k)

$CTRL1 = 1.24/(1 + (16.9/22.1))$

CTRL1 = 703mV (I_{LED} = 703mA)

Step 2: Choose resistor network option A (Figure 7) and CTRL2 = CTRL1 for 25°C breakpoint

start with R4 = R2 = 16.9k, R_{NTC} = 22k (closest value available)

CTRL2 = 701mV (I_{LED} = Min(CTRL1, CTRL2) • 1A = 701mA)

Step 3: Calculate CTRL2 slope between 25°C and 50°C

$CTRL2\ (T) = 1.24/(1 + R4/R_{NTC}\ (T))$

at $T = T_O$ = 25°C, CTRL2 = 701mV

at T = 50°C, $R_{NTC}\ (T) = R_{NTC}\ (T_O).e^x$, $x = B\ [(1/(T + 273) – 1/298)]$

(B = B-constant; linear over the 25°C to 50°C temperature range)

For R_{NTC} B-constant = 3950 and T = 50°C

$x = 3950\ [(1/323) – 1/298] = –1.026$

$R_{NTC}\ (50°C) = R_{NTC}\ (25°C).e^{–1.026}$

$R_{NTC}\ (50°C) = 22k \bullet 0.358$

$R_{NTC}\ (50°C) = 7.9k$

CTRL2(50°C) = 1.24/(1 + 16.9/7.9) = 395mV

CTRL2 slope (25°C to 50°C) = [CTRL2(50°C) – CTRL2(25°C)]/25°C

= (395 – 701)/25

= –306mV/25°C

I_{LED} slope = –306mA/25°C

The required I_{LED} slope is –200mA/25°C. To reduce the slope of CTRL2 versus temperature it is easier to keep the exact same NTC resistor value and B-constant (there are limited choices) and simply adjust R4 and the type of resistor network used for the CTRL2 pin. By changing the resistor network to option C it is possible to place a temperature independent resistor in series with R_{NTC} to reduce the effects of R_{NTC} on the CTRL2 pin voltage over temperature.

Step 4: Calculate the resistor value required for R_Y in resistor network option (c) (Figure 7) to provide an I_{LED} slope of –200mA/25°C between 25°C and 50°C ambient temperature.

$CTRL2\ (25°C) = 0.7V = 1.24/(1 + (R4/(R_{NTC}(25°C)+ R_Y))$

$R4 = 0.77\ (R_{NTC}(25°C) + R_Y)$ (a)

for –200mA/25°C slope ≥ CTRL2(50°C) = 0.7 – 0.2 = 0.5

$CTRL2(50°C) = 0.5V = 1.24/(1 + (R4/(R_{NTC} + R_Y))$

$R4 = 1.48\ (R_{NTC}(50°C) + R_Y)$ (b)

Equating (a) = (b) and knowing $R_{NTC}(25°C)$ = 22k and $R_{NTC}(50°C)$ = 7.9k gives,

$0.77\ (22k + R_Y) = 1.48\ (7.9k + R_Y)$

$17k + 0.77\ R_Y = 11.7\ k + 1.48\ R_Y$

$R_Y = (17k – 11.7k)/(1.48 – 0.77)$

$R_Y = 7.5k$

APPLICATIONS INFORMATION

The value for R4 can now be solved using equation (a) where,

$R4 = 0.77\ (R_{NTC}(25°C) + R_Y) = 0.77\ (22k + 7.5k)$

R4 = 22.7k (choose 22.6k)

I_{LED} slope can now be calculated from,

I_{LED} slope = [CTRL2(50°C) – CTRL2(25°C)]/25°C

where CTRL2 (50°C) = 1.24/(1 + 22.6/(7.9 + 7.5)) = 503mV

and CTRL2 (25°C) = 1.24/(1 + 39.2/(22 + 28.7)) = 699mV

giving I_{LED} slope (from 25°C to 50°C)

= 503mV – 699mV/25°C

= –196mV/25°C => I_{LED} slope = –196mA/25°C

Using the Murata simulation tool for the resistor network and values in the above example shows a CTRL2 voltage curve that flattens out as temperatures approach 100°C ambient. The final resistor network chosen for the derating curve in Figure 6 used option C network with R4 = 19.3k, R_{NTC} = 22k (NCP15XW223J0SRC) and R_Y = 3.01k. Although the CTRL2 downward slope is greater than –200mA/25°C initially, the slope is required to avoid exceeding maximum allowed LED currents at high ambient temperatures (see Figure 6).

PWM Dimming

Many LED applications require an accurate control of the brightness of the LED(s). In addition, being able to maintain a constant color over the entire dimming range can be just as critical. For constant color LED dimming, the LT3478/LT3478-1 provide a PWM pin and special internal circuitry to allow up to a 3000:1 wide PWM dimming range. With an N-channel MOSFET connected between the LED(s) and ground and a PWM signal connected to the gate of the MOSFET and the PWM pin (Figure 9), it is possible to control the brightness of the LED(s) based on PWM signal duty cycle only. This form of dimming is superior to dimming control using an analog input voltage (reducing CTRL1 voltage) because it allows constant color to be maintained during dimming. The maximum current for the output LED(s) is programmed for a given brightness/color and "chopped" over a PWM duty cycle range (Figure 10) from 100% to as low as 0.033%.

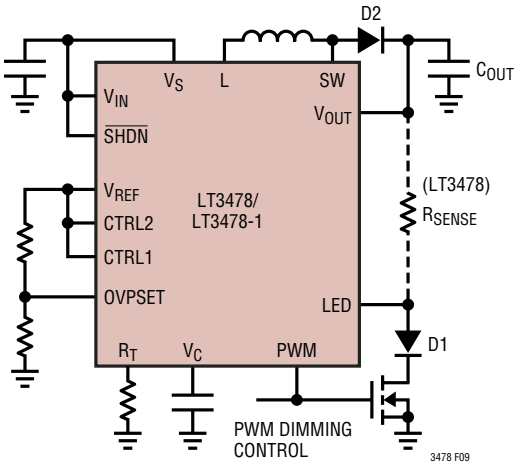

Figure 9. PWM Dimming Control Using the LT3478/LT3478-1

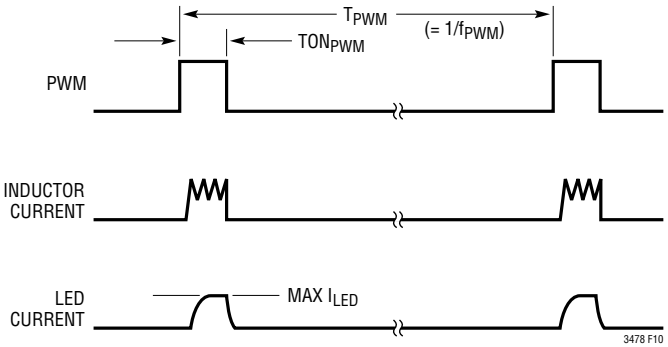

Figure 10. PWM Dimming Waveforms Using the LT3478/LT3478-1

Some general guidelines for LED Current Dimming using the PWM pin (see Figure 10):

(1) PWM Dimming Ratio (PDR) = 1/(PWM duty cycle) = $1/(TON_{PWM} \bullet f_{PWM})$

(2) Lower f_{PWM} allows higher PWM Dimming Ratios (use minimum f_{PWM} = 100Hz to avoid visible flicker and to maximize PDR)

(3) Higher f_{OSC} value improves PDR (allows lower TON_{PWM}) but will reduce efficiency and increase internal heating. In general, minimum operational $TON_{PWM} = 3 \bullet (1/f_{OSC})$.

(4) Lower inductor value improves PDR

APPLICATIONS INFORMATION

(5) Higher output capacitor value improves PDR

(6) Choose the schottky diode (D2, Figure 9) for minimum reverse leakage

See Typical Performance Characteristics graph "LED Current vs PWM Duty Cycle".

Soft-Start

To limit inrush current and output voltage overshoot during startup/recovery from a fault condition, the LT3478/LT3478-1 provide a soft-start pin SS. The SS pin is used to program switch current ramp up timing using a capacitor to ground. The LT3478/LT3478-1 monitor system parameters for the following faults: V_{IN} <2.8V, $\overline{SHDN}$ <1.4, inductor current >6A and boosted output voltage >OVP. On detection of any of these faults, the LT3478/LT3478-1 stop switching immediately and a soft-start latch is set causing the SS pin to be discharged (see Timing Diagram for the SS pin in Figure 11). When all faults no longer exist and the SS pin has been discharged to at least 0.25V, the soft-start latch is reset and an internal 12µA supply charges the SS pin. A gradual ramp up of SS pin voltage is equivalent to a ramp up of switch current limit until SS exceeds V_C.

The ramp rate of the SS pin is given by:

$$\Delta V_{SS}/\Delta t = 12\mu A/C_{SS}$$

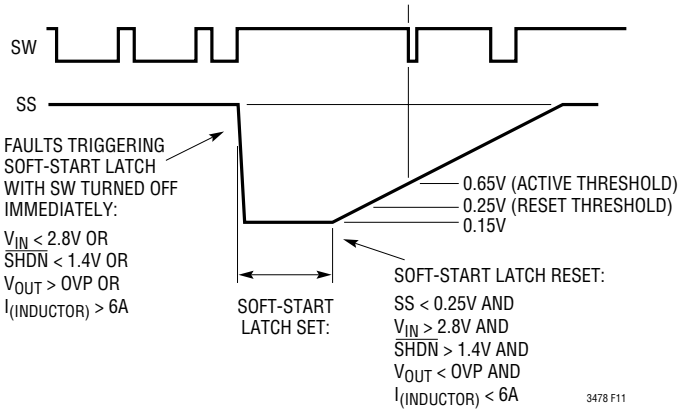

Figure 11. LT3478 Fault Detection and SS Pin Timing Diagram

To limit inductor current overshoot to <0.5A when SS charges past the V_C level required for loop control, the C_{SS} capacitor should be chosen using the following formula:

$$C_{SS(MIN)} = C_C\,(7.35 - 0.6(I_{LED} \bullet V_{OUT}/V_S))$$

Example: V_S = 8V, V_{OUT} = 16V, I_{LED} = 1.05A, C_C = 0.1µF,
$C_{SS(MIN)}$ = 0.1µF (7.35 – 0.6(1.05 • 16/8))
= 0.612µF (choose 0.68µF).

High Inductor Current "Inrush" Protection

The LT3478/LT3478-1 provide an integrated resistor between the V_S and L pins to monitor inductor current (Figure 1). During startup or "hotplugging" of the inductor supply, it is possible for inductor currents to exceed the maximum switch current limit. When inductor current exceeds 6A, the LT3478/LT3478-1 protect the internal power switch by turning it off and triggering a soft-start latch. This protection prevents the switch from repetitively turning on during excessive inductor currents by delaying switching until the fault has been removed. To defeat inductor current sensing the inductor supply should be connected to the L pin and the V_S pin left open. See details in the Applications Information section "Soft-Start".

LED Open Circuit Protection and Maximum PWM Dimming Ratios

The LT3478/LT3478-1 LED drivers provide optimum protection from open LED faults by clamping the converter output to a programmable overvoltage protection level (OVP). In addition, the programmable OVP feature draws zero current from the output during PWM = 0 to allow higher PWM dimming ratios. This provides an advantage over other LED driver applications which connect a resistor divider directly from V_{OUT}.

An open LED fault occurs when the connection to the LED(s) becomes broken or the LED(s) fails open. For an LED driver using a step-up switching regulator, an open circuit LED fault can cause the converter output to exceed the voltage capabilities of the regulator's power switch, causing permanent damage. When V_{OUT} exceeds OVP, the

APPLICATIONS INFORMATION

LT3478/LT3478-1 immediately stop switching, a soft-start latch is set and the SS pin is discharged. The SS latch can only be reset when V_{OUT} falls below OVP and the SS pin has been discharged below 0.25V (Figure 11). If the LED(s) simply go open circuit and are reconnected, however, the OVP used to protect the switch might be too high for the reconnected LED(s). The LT3478/LT3478-1 therefore allow OVP to be programmable to protect both the LED driver switch and the LED(s). (The minimum allowable OVP for normal operation for a given LED string depends on the number of LEDs and their maximum forward voltage ratings.) OVP is programmed using the OVPSET pin (front page), given by,

$$OVP = (OVPSET \bullet 41)V$$

where the programmable range for the OVPSET pin is 0.3V to 1V resulting in an OVP range of 12.3V to 41V.

The OVPSET pin can be programmed with a single resistor by tapping off of the resistor divider from V_{REF} used to program CTRL1. If both CTRL1 and CTRL2 are connected directly to V_{REF} (maximum LED current setting) then OVPSET requires a simple 2 resistor divider from V_{REF}.

Thermal Calculations

To maximize output power capability in an application without exceeding the LT3478/LT3478-1 125°C maximum operational junction temperature, it is useful to be able to calculate power dissipation within the IC. The power dissipation within the IC comes from four main sources: switch DC loss, switch AC loss, Inductor and LED current sensing and input quiescent current. These formulas assume a boost converter architecture, continuous mode operation and no PWM dimming.

(1) Switch DC loss = $P_{SW(DC)}$

$$= (R_{SW} \bullet I_{L(AVE)}^2 \bullet D)$$

R_{SW} = switch resistance = 0.07Ω (at T_J = 125°C)

$I_{L(AVE)} = P_{OUT}/(\eta \bullet V_S)$

$P_{OUT} = V_{OUT} \bullet I_{LED}$

η = converter efficiency = $P_{OUT}/(P_{OUT} + P_{LOSS})$

V_S = inductor supply input

D = switch duty cycle = $(V_{OUT} + V_F - V_S)/(V_{OUT} + V_F - V_{SAT})$

V_F = forward voltage drop of external Schottky diode

$V_{SAT} = I_{L(AVE)} \bullet R_{SW}$

(2) Switch AC loss = $P_{SW(AC)}$

$$= t_{EFF}(1/2)I_{L(AVE)}(V_{OUT} + V_F)(F_{OSC})$$

t_{EFF} = effective switch current and switch V_{CE} voltage overlap time during turn on and turn off = $2 \bullet (t_{ISW} + t_{VSW})$

t_{ISW} = I_{SWITCH} rise/fall time = $I_{L(AVE)} \bullet 2ns$

t_{VSW} = SW fall/rise time = $(V_{OUT} + V_F) \bullet 0.7ns$

f_{OSC} = switching frequency

(3) Current sensing loss = P_{SENSE} = $P_{SENSE(IL)} + P_{SENSE(ILED)}$

$P_{SENSE(IL)} = I_{L(AVE)}^2 \bullet 9.5m\Omega$

$P_{SENSE(ILED)} = I_{LED}^2 \bullet 0.1\Omega$

(4) Input quiescent loss = $P_Q = V_{IN} \bullet I_Q$ where

$I_Q = (6.2mA + (100mA \bullet D))$

Example (Using LT3478-1):

For $V_{IN} = V_S = 8V$, $I_{LED} = 700mA$, $V_{OUT} = 24.5V$ (7 LEDs), $V_F = 0.5V$ and $f_{OSC} = 0.2Mhz$,

$\eta = 0.89$ (initial assumption)

$I_{L(AVE)} = (24.5 \bullet 0.7)/(0.89 \bullet 8) = 2.41A$

$D = (24.5 + 0.5 - 8)/(24.5 + 0.5 - 0.17) = 0.684$

$T_{EFF} = 2 \bullet ((2.41 \bullet 2)ns + (24.5 + 0.5) \bullet 0.7)ns = 45ns$

Total Power Dissipation:

$P_{IC} = P_{SW(DC)} + P_{SW(AC)} + P_{SENSE} + P_Q$

$P_{SW(DC)} = 0.07 \bullet (2.41)^2 \bullet 0.684 = 0.278W$

$P_{SW(AC)} = 45ns \bullet 0.5 \bullet 2.41 \bullet 25 \bullet 0.2MHz = 0.271W$

$P_{SENSE} = ((2.41)^2 \bullet 0.0095) + ((0.7)^2 \bullet 0.1) = 0.104W$

$P_Q = 8 \bullet (6.2mA + (100mA \bullet 0.684)) = 0.597W$

$P_{IC} = 0.278 + 0.271 + 0.104 + 0.597 = 1.25W$

APPLICATIONS INFORMATION

Local heating from the nearby inductor and Schottky diode will also add to the final junction temperature of the IC. Based on empirical measurements, the effect of diode and inductor heating on the LT3478-1 junction temperature can be approximated as:

ΔT_J (LT3478-1) = 5°C/W • (P_{DIODE} + $P_{INDUCTOR}$)

P_{DIODE} = (1 – D) • V_F • $I_{L(AVE)}$

1 – D = 0.316

V_F = 0.5V

$I_{L(AVE)}$ = 2.41

P_{DIODE} = 0.316 • 0.5 • 2.41 = 0.381W

$P_{INDUCTOR}$ = $I_{L(AVE)}^2$ • DCR

DCR = inductor DC resistance (assume 0.05Ω)

$P_{INDUCTOR}$ = $(2.41)^2$ • 0.05 = 0.29W

The LT3478/LT3478-1 use a thermally enhanced FE package. With proper soldering to the Exposed Pad on the underside of the package combined with a full copper plane underneath the device, thermal resistance (θ_{JA}) will be about 35°C/W. For an ambient temperature of T_A = 70°C, the junction temperature of the LT3478-1 for the example application described above, can be calculated as:

T_J (LT3478-1)
= T_A + θ_{JA}(P_{TOT}) + 5(P_{DIODE} + $P_{INDUCTOR}$)

= 70 + 35(1.25) + 5(0.671)

= 70 + 44 + 4

= 118°C

In the above example, efficiency was initially assumed to be η = 0.89. A lower efficiency (η) for the converter will increase $I_{L(AVE)}$ and hence increase the calculated value for T_J. η can be calculated as:

η = P_{OUT}/(P_{OUT} + P_{LOSS})

P_{OUT} = V_{OUT} • I_{LED} = 17.15W

P_{LOSS} (estimated) = P_{IC} + P_{DIODE} + $P_{INDUCTOR}$ = 1.92W

η = 17.15/(17.15 + 1.92) = 0.9

If an application is built, the inductor current can be measured and a new value for junction temperature estimated. Ideally a thermal measurement should be made to achieve the greatest accuracy for T_J.

Note: The junction temperature of the IC can be reduced if a lower V_{IN} supply is available – separate from the inductor supply V_S. In the above example, driving V_{IN} from an available 3V source (instead of V_S = 8V) reduces input quiescent losses in item(4) from 0.597W to 0.224W, resulting in a reduction of T_J from 118°C to 105°C.

Layout Considerations

As with all switching regulators, careful attention must be given to PCB layout and component placement to achieve optimal thermal,electrical and noise performance (Figure 12). The exposed pad of the LT3478/LT3478-1 (Pin 17) is the only GND connection for the IC. The exposed pad should be soldered to a continuous copper ground plane underneath the device to reduce die temperature and maximize the power capability of the IC. The ground path for the R_T resistor and V_C capacitor should be taken from nearby the analog ground connection to the exposed pad (near Pin 9) separate from the power ground connection to the exposed pad (near Pin 16). The bypass capacitor for V_{IN} should be placed as close as possible to the V_{IN} pin and the analog ground connection. SW pin voltage rise and fall times are designed to be as short as possible for maximum efficiency. To reduce the effects of both radiated and conducted noise, the area of the SW trace should be kept as small as possible. Use a ground plane under the switching regulator to minimize interplane coupling. The schottky diode and output capacitor should be placed as close as possible to the SW node to minimize this high frequency switching path. To minimize LED current sensing errors for the LT3478, the terminals of the external sense resistor R_{SENSE} should be tracked to the V_{OUT} and LED pins separate from any high current paths.

APPLICATIONS INFORMATION

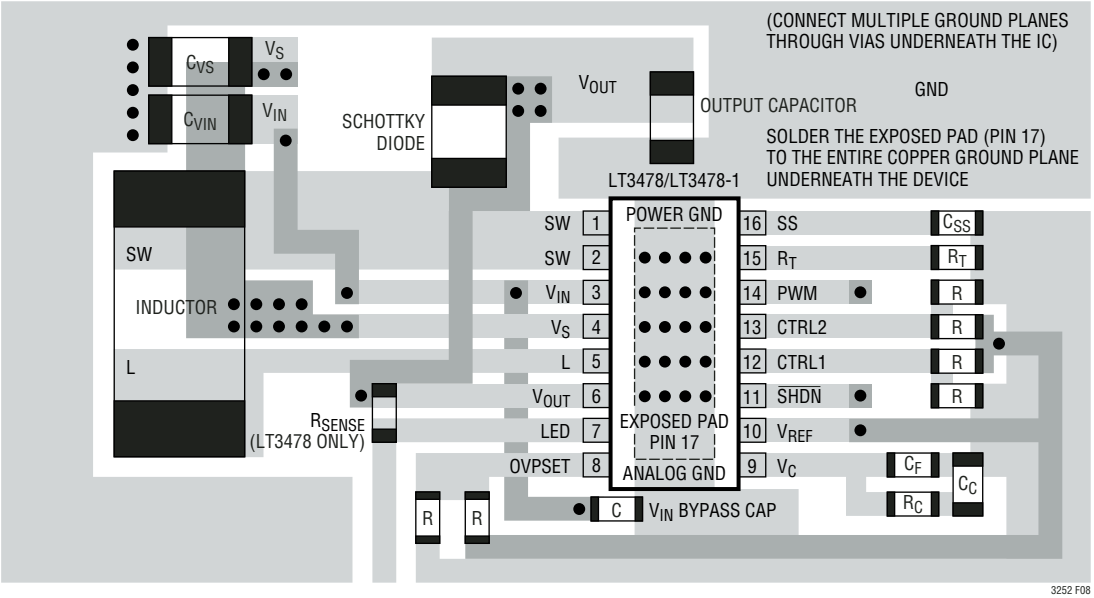

Figure 12. Recommended Layout for LT3478/LT3478-1 (Boost Configuration)

TYPICAL APPLICATIONS

15W, 6 LEDs at 700mA, Boost LED Driver

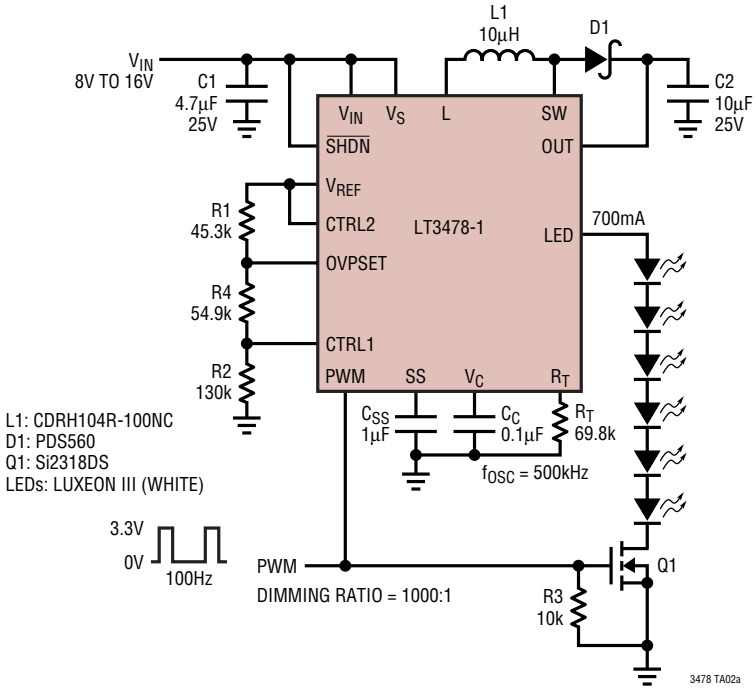

LT3478-1 PWM Dimming Waveforms

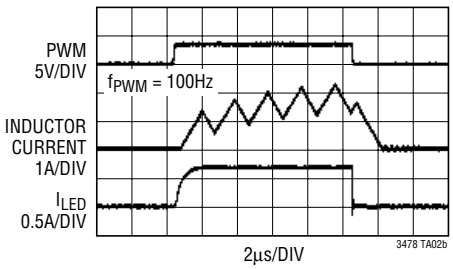

PWM DIMMING RATIO = 1000:1
(SEE EFFICIENCY ON PAGE 1)

TYPICAL APPLICATIONS

17W, 15 LEDs at 350mA, Boost LED Driver plus LT3003

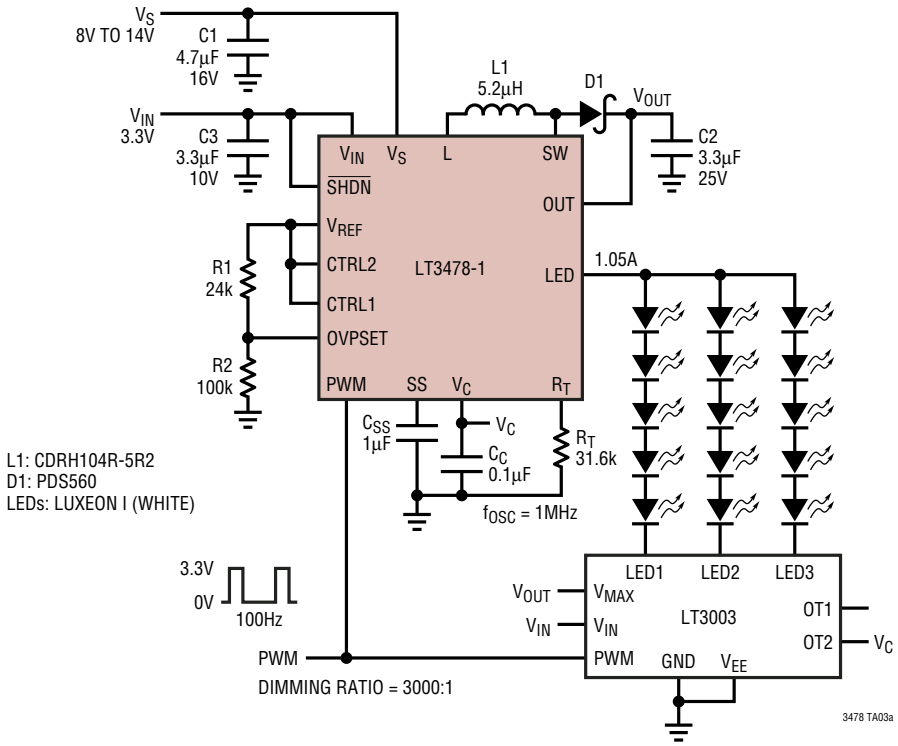

Efficiency vs Input V_S

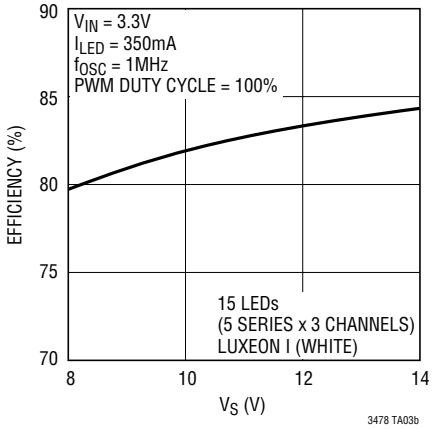

16W, 12 LEDs at 350mA, Buck-Boost Mode LED Driver plus LT3003

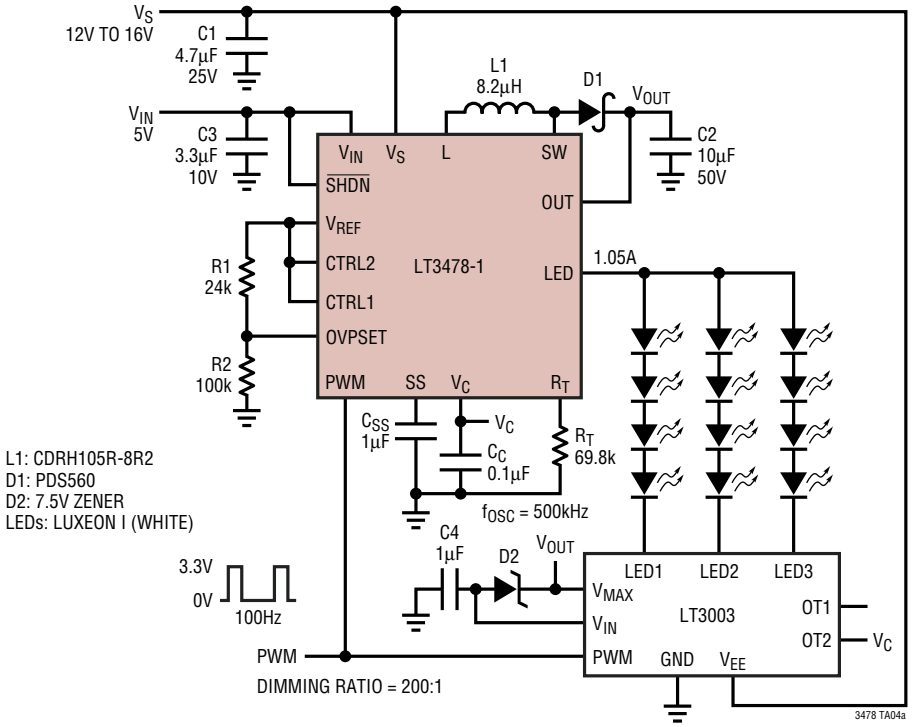

Efficiency vs Input V_S

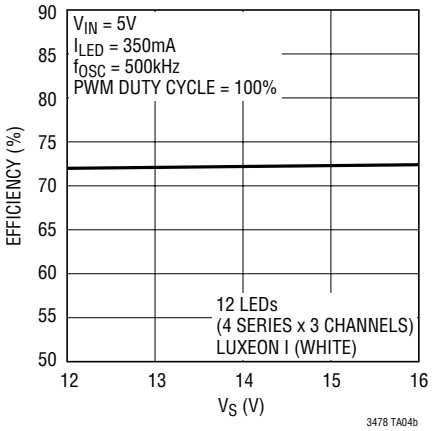

TYPICAL APPLICATIONS

4W, 1 LED at 1A, Buck-Boost Mode LED Driver

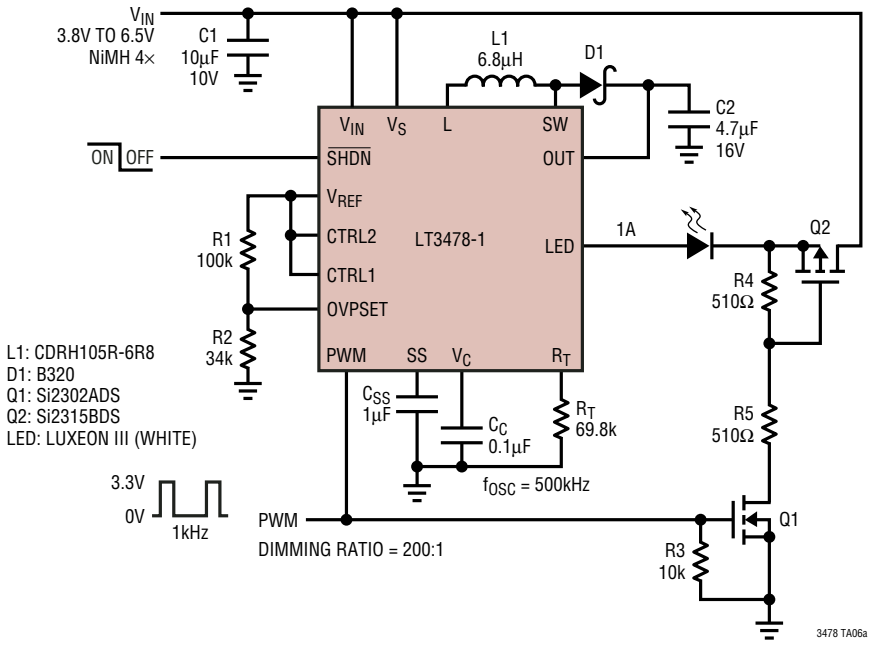

Efficiency vs V_{IN}

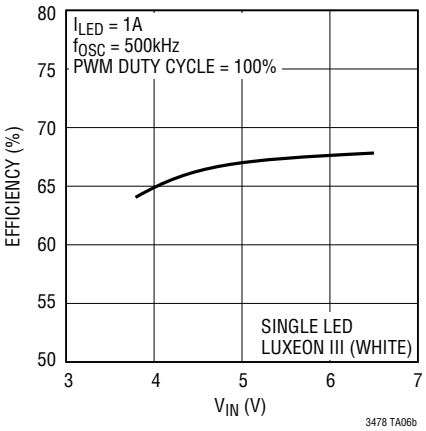

TYPICAL APPLICATIONS

24W, 4 LEDs at 1.5A, Buck Mode LED Driver

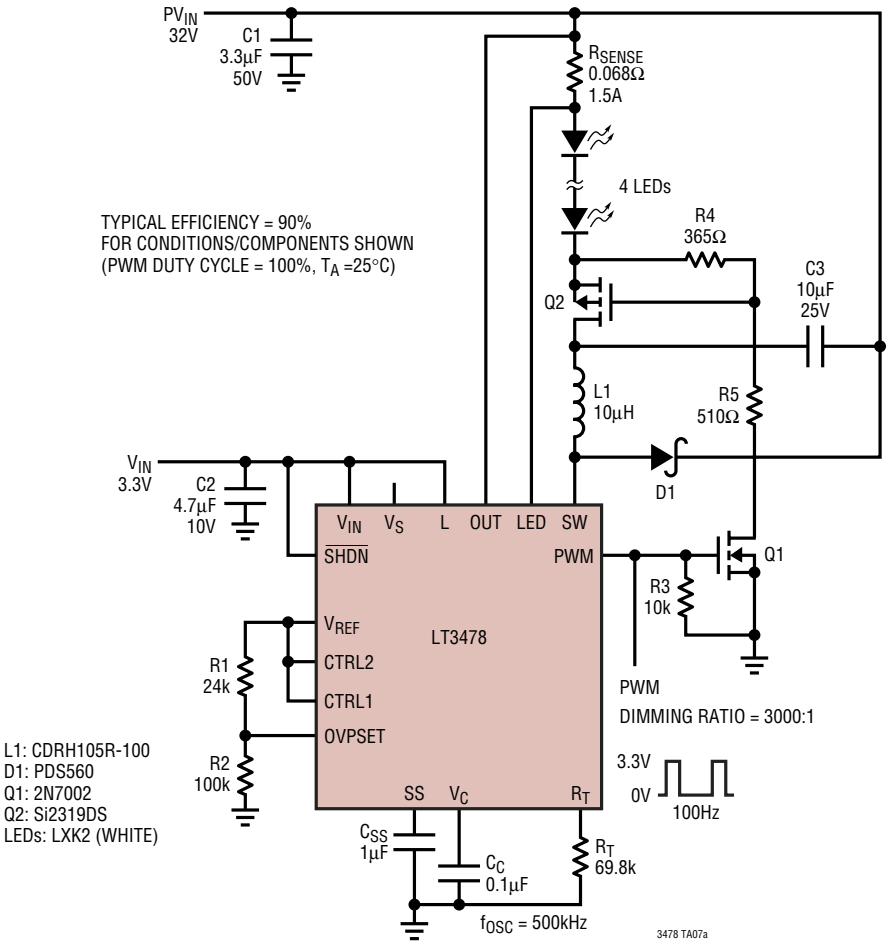

TYPICAL EFFICIENCY = 90%
FOR CONDITIONS/COMPONENTS SHOWN
(PWM DUTY CYCLE = 100%, T_A =25°C)

L1: CDRH105R-100
D1: PDS560
Q1: 2N7002
Q2: Si2319DS
LEDs: LXK2 (WHITE)

PACKAGE DESCRIPTION

FE Package
16-Lead Plastic TSSOP (4.4mm)
(Reference LTC DWG # 05-08-1663)
Exposed Pad Variation BC

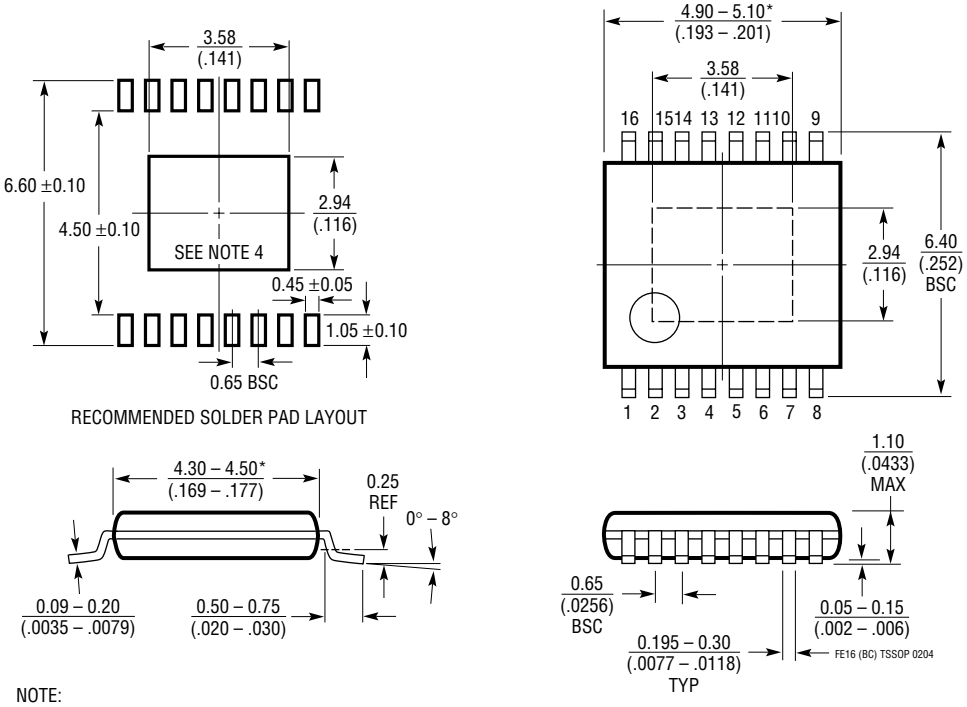

NOTE:
1. CONTROLLING DIMENSION: MILLIMETERS
2. DIMENSIONS ARE IN MILLIMETERS / (INCHES)
3. DRAWING NOT TO SCALE
4. RECOMMENDED MINIMUM PCB METAL SIZE FOR EXPOSED PAD ATTACHMENT

*DIMENSIONS DO NOT INCLUDE MOLD FLASH. MOLD FLASH SHALL NOT EXCEED 0.150mm (.006") PER SIDE

Information furnished by Linear Technology Corporation is believed to be accurate and reliable. However, no responsibility is assumed for its use. Linear Technology Corporation makes no representation that the interconnection of its circuits as described herein will not infringe on existing patent rights.

TYPICAL APPLICATION

6W, 6 LEDs at 250mA, Boost LED Driver

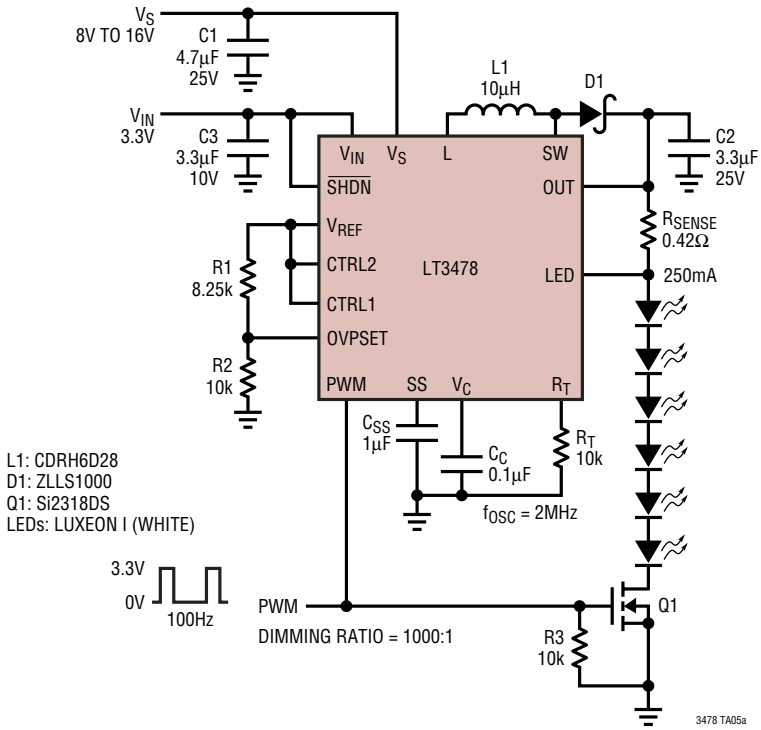

Efficiency vs Input V_S

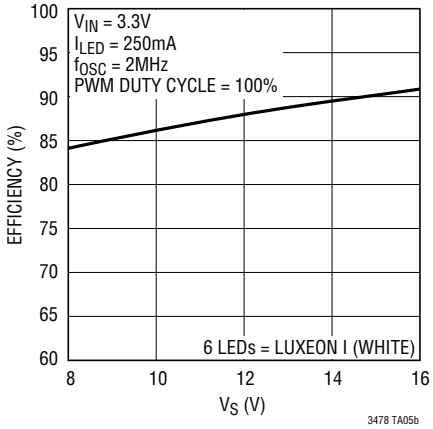

RELATED PARTS

PART NUMBER	DESCRIPTION	COMMENTS
LT1618	Constant Current, 1.4MHz, 1.5A Boost Converter with Analog/PWM Dimming	V_{IN}: 5V to 18V, $V_{OUT(MAX)}$ = 36V, I_{SD} <1µA, MS10 Package
LT3003	Three Channel LED Ballaster with 3,000:1 True Color PWM Dimming	V_{IN}: 3V to 48V, I_{SD} <5µA, MSOP10 Package
LT3474	36V, 1A (I_{LED}), 2MHz,Step-Down LED Driver with 400:1 True Color PWM Dimming	V_{IN}: 4V to 36V, $V_{OUT(MAX)}$ = 13.5V, I_{SD} <1µA, TSSOP16E Package
LT3475	Dual 1.5A(I_{LED}), 36V, 2MHz,Step-Down LED Driver 3,000:1 True Color PWM Dimming	V_{IN}: 4V to 36V, $V_{OUT(MAX)}$ = 13.5V, I_{SD} <1µA, TSSOP20E Package
LT3476	Quad Output 1.5A, 2MHz High Current LED Driver with 1,000:1 True Color PWM Dimming	V_{IN}: 2.8V to 16V, $V_{OUT(MAX)}$ = 36V, I_{SD} <10µA, 5mm × 7mm QFN Package
LT3477	42V, 3A, 3.5MHz Boost, Buck-Boost, Buck LED Driver with Analog/ PWM Dimming	V_{IN}: 2.5V to 25V, $V_{OUT(MAX)}$ = 40V, I_{SD} <1µA, QFN, TSSOP20E Packages
LT3479	3A, 3.5MHz Full Featured DC/DC Converter with Soft-Start and Inrush Current Protection and Analog/PWM Dimming	V_{IN}: 2.5V to 24V, $V_{OUT(MAX)}$ = 40V, I_{SD} <1µA, 4mm × 3mm DFN, TSSOP16E Packages
LT3486	Dual 1.3A , 2MHz High Current LED Driver with 1,000:1 True Color PWM Dimming	V_{IN}: 2.5V to 24V, $V_{OUT(MAX)}$ = 36V, I_{SD} <1µA, 5mm × 3mm DFN, TSSOP16E Packages
LTC3783	High Current LED Controller with 3,000:1 True Color PWM Dimming	V_{IN}: 3V to 36V, $V_{OUT(MAX)}$ = Ext FET, I_{SD} <20µA, 5mm × 4mm DFN, TSSOP16E Packages

Linear Technology Corporation
1630 McCarthy Blvd., Milpitas, CA 95035-7417
(408) 432-1900 • FAX: (408) 434-0507 • www.linear.com
LT 0107 • PRINTED IN USA
© LINEAR TECHNOLOGY CORPORATION 2007