Precision Quad Supply Monitor in 6-Lead SOT-23

FEATURES

- **Ultralow Voltage Reset: V_{CC} = 0.5V Guaranteed**
- **Monitor Four Inputs Simultaneously**
  3.3V, 2.5V, 1.8V, ADJ (LTC2903-A1)
  5V, 3.3V, 2.5V, 1.8V (LTC2903-B1)
  5V, 3.3V, 1.8V, –5.2V (LTC2903-C1)
  3.3V, ADJ, ADJ, ADJ (LTC2903-D1)
  5V, ADJ, ADJ, ADJ (LTC2903-E1)
- **Guaranteed Threshold Accuracy: ±1.5% of Monitored Voltage over Temperature**
- **10% (A1, B1, C1) and 5% (D1, E1) Undervoltage Monitoring**
- **Low Supply Current: 20μA Typical**
- 200ms Reset Time Delay
- Active Low Open-Drain $\overline{RST}$ Output
- Power Supply Glitch Immunity
- Low Profile (1mm) SOT-23 (ThinSOT™) Package

DESCRIPTION

The LTC®2903-1 monitors up to four supply voltages. The common reset output remains low until all four inputs have been in compliance for 200ms. Voltage thresholds maintain ±1.5% accuracy over temperature (with respect to the monitored voltage). The LTC2903-1 features an open-drain $\overline{RST}$ output with a weak internal pullup.

Internal supply voltage (V_{CC}) is generated from the greater voltage on the V1, V2 inputs. V_{CC} = V1 for LTC2903-D1 and LTC2903-E1. The $\overline{RST}$ output is guaranteed to sink at least 5μA (V_{OL} = 0.15V) for V_{CC} down to 0.5V and will typically conduct current down to 0V. Quiescent current is 20μA typical, making the LTC2903-1 ideal for power conscious systems. The LTC2903-1 is available in a 6-lead low profile (1mm) SOT-23 package.

LT, LTC and LT are registered trademarks of Linear Technology Corporation.
ThinSOT is a trademark of Linear Technology Corporation.

APPLICATIONS

- Multivoltage Systems
- Optical Networking Systems
- Cell Phone Base Stations
- Network Servers

TYPICAL APPLICATION

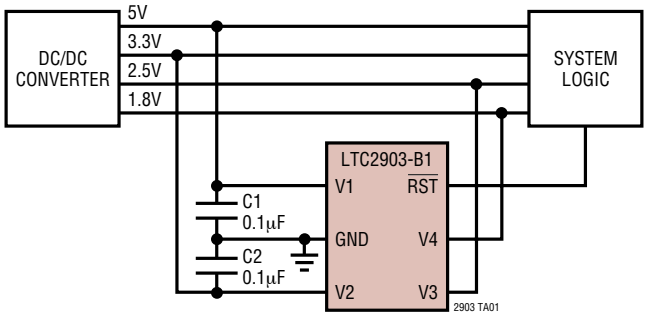

Low Voltage Reset Pull-Down Performance vs External Pull-Up Current and Input Supply Voltage

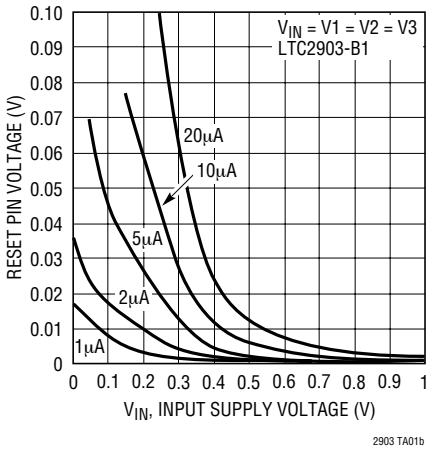

ABSOLUTE MAXIMUM RATINGS

(Notes 1, 2, 3)

V1, V2 ..... –0.3V to 6.5V
V3 ..... 2.7V or (V_{CC} + 0.3V)
V4 (LTC2903-A1, -B1, -D1, -E1) .....–0.3V to 6.5V
V4 (LTC2903-C1) ..... –6.5V to 0.3V
$\overline{RST}$ ..... –0.3V to 6.5V
Operating Temperature Range
LTC2903C-X1 .....0°C to 70°C
LTC2903I-X1 ..... –40°C to 85°C
Storage Temperature Range ..... –65°C to 150°C
Lead Temperature (Soldering, 10 sec)..... 300°C

PACKAGE/ORDER INFORMATION

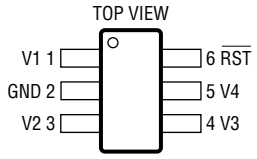

S6 PACKAGE
6-LEAD PLASTIC TSOT-23

T_{JMAX} = 125°C, θ_{JA} = 230°C/W

ORDER PART NUMBER	S6 PART MARKING
LTC2903CS6-A1	LTAFV
LTC2903CS6-B1	LTAJN
LTC2903CS6-C1	LTAJQ
LTC2903CS6-D1	LTBMX
LTC2903CS6-E1	LTBMZ
LTC2903IS6-A1	LTAFW
LTC2903IS6-B1	LTAJP
LTC2903IS6-C1	LTAJR
LTC2903IS6-D1	LTBMY
LTC2903IS6-E1	LTBNB

Consult LTC Marketing for parts specified with wider operating temperature ranges.

ELECTRICAL CHARACTERISTICS

(LTC2903-A1) The ● denotes the specifications which apply over the full operating temperature range, otherwise specifications are at T_A = 25°C. V_{CC} = 3.3V unless otherwise noted.

SYMBOL	PARAMETER	CONDITIONS		MIN	TYP	MAX	UNITS
V_{RT33}	3.3V, 10% Reset Threshold	V1 Input Threshold	●	2.871	2.921	2.970	V
V_{RT25}	2.5V, 10% Reset Threshold	V2 Input Threshold	●	2.175	2.213	2.250	V
V_{RT18}	1.8V, 10% Reset Threshold	V3 Input Threshold	●	1.566	1.593	1.620	V
V_{RTA}	Adjustable Reset Threshold	V4 Input Threshold	●	0.492	0.500	0.508	V

(LTC2903-B1) The ● denotes the specifications which apply over the full operating temperature range, otherwise specifications are at T_A = 25°C. V_{CC} = 5V unless otherwise noted.

SYMBOL	PARAMETER	CONDITIONS		MIN	TYP	MAX	UNITS
V_{RT50}	5V, 10% Reset Threshold	V1 Input Threshold	●	4.350	4.425	4.500	V
V_{RT33}	3.3V, 10% Reset Threshold	V2 Input Threshold	●	2.871	2.921	2.970	V
V_{RT25}	2.5V, 10% Reset Threshold	V3 Input Threshold	●	2.175	2.213	2.250	V
V_{RT18}	1.8V, 10% Reset Threshold	V4 Input Threshold	●	1.566	1.593	1.620	V

(LTC2903-C1) The ● denotes the specifications which apply over the full operating temperature range, otherwise specifications are at T_A = 25°C. V_{CC} = 5V unless otherwise noted.

SYMBOL	PARAMETER	CONDITIONS		MIN	TYP	MAX	UNITS
V_{RT50}	5V, 10% Reset Threshold	V1 Input Threshold	●	4.350	4.425	4.500	V
V_{RT33}	3.3V, 10% Reset Threshold	V2 Input Threshold	●	2.871	2.921	2.970	V
V_{RT18}	1.8V, 10% Reset Threshold	V3 Input Threshold	●	1.566	1.593	1.620	V
V_{RT52N}	–5.2V, 10% Reset Threshold	V4 Input Threshold	●	–4.524	–4.602	–4.680	V

ELECTRICAL CHARACTERISTICS

(LTC2903-D1) The ● denotes the specifications which apply over the full operating temperature range, otherwise specifications are at T_A = 25°C. V_{CC} = 3.3V unless otherwise noted.

SYMBOL	PARAMETER	CONDITIONS		MIN	TYP	MAX	UNITS
V_{RT33}	3.3V, 5% Reset Threshold	V1 Input Threshold	●	3.036	3.086	3.135	V
V_{RTAV2}	V2 Adjustable Threshold	V2 Input Threshold	●	0.492	0.500	0.508	V
V_{RTAV3}	V3 Adjustable Threshold	V3 Input Threshold	●	0.492	0.500	0.508	V
V_{RTAV4}	V4 Adjustable Threshold	V4 Input Threshold	●	0.492	0.500	0.508	V

(LTC2903-E1) The ● denotes the specifications which apply over the full operating temperature range, otherwise specifications are at T_A = 25°C. V_{CC} = 5V unless otherwise noted.

SYMBOL	PARAMETER	CONDITIONS		MIN	TYP	MAX	UNITS
V_{RT50}	5V, 5% Reset Threshold	V1 Input Threshold	●	4.600	4.675	4.750	V
V_{RTAV2}	V2 Adjustable Threshold	V2 Input Threshold	●	0.492	0.500	0.508	V
V_{RTAV3}	V3 Adjustable Threshold	V3 Input Threshold	●	0.492	0.500	0.508	V
V_{RTAV4}	V4 Adjustable Threshold	V4 Input Threshold	●	0.492	0.500	0.508	V

The ● denotes the specifications which apply over the full operating temperature range, otherwise specifications are at T_A = 25°C. V_{CC} = 3.3V unless otherwise noted.

SYMBOL	PARAMETER	CONDITIONS		MIN	TYP	MAX	UNITS
I_{V1}	V1 Input Current (Note 4)	V1 = 3.3V (LTC2903-A1, LTC2903-D1) V1 = 5V (LTC2903-B1, LTC2903-C1, LTC2903-E1)	● ●		20 25	80 80	µA µA
I_{V2}	V2 Input Current (Note 4)	V2 = 2.5V (LTC2903-A1) V2 = 3.3V (LTC2903-B1, LTC2903-C1) V2 = 0.55V (LTC2903-D1, LTC2903-E1)	● ● ●		8 10	30 30 ±30	µA µA nA
I_{V3}	V3 Input Current	V3 = 1.8V (LTC2903-A1, LTC2903-C1) V3 = 2.5V (LTC2903-B1) V3 = 0.55V (LTC2903-D1, LTC2903-E1)	● ● ●		8 10	30 30 ±30	µA µA nA
I_{V4}	V4 Input Current	V4 = 0.55V (LTC2903-A1) V4 = 1.8V (LTC2903-B1) V4 = –5.2V (LTC2903-C1) V4 = 0.55V (LTC2903-D1, LTC2903-E1)	● ● ● ●		 2 –3	±30 4 –6 ±30	nA µA µA nA
t_{RST}	Reset Time-Out Period		●	140	200	260	ms
t_{UV}	V_X Undervoltage Detect to $\overline{RST}$	V_X Less Than Threshold V_{RTX} by More Than 1%			150		µs
V_{OH}	Output Voltage High $\overline{RST}$ (LTC2903-1) (Note 5)	$I_{RST(DN)}$ = –1µA (LTC2903-A1, LTC2903-B1, LTC2903-C1) (LTC2903-D1, LTC2903-E1)	● ●	V2 – 1 V1 – 1			V V
V_{OL}	Output Voltage Low $\overline{RST}$ (Note 6)	V_{CC} = 0.2V, I_{RST} = 0.1µA V_{CC} = 0.5V, I_{RST} = 5µA V_{CC} = 1V, I_{RST} = 200µA V_{CC} = 3V, I_{RST} = 2500µA	● ● ● ●		5 10 25 100	60 150 300 300	mV mV mV mV

Note 1: Absolute Maximum Ratings are those values beyond which the life of the device may be impaired.

Note 2: All currents into pins are positive, all voltages are referenced to GND unless otherwise noted.

Note 3: The internal supply voltage (V_{CC}) is generated from the greater voltage on the V1 and V2 inputs. V_{CC} = V1 for options D1 and E1.

Note 4: Under typical operating conditions, quiescent current is drawn from the V1 input. When V2 exceeds V1, V2 supplies the quiescent current. V1 only for options D1 and E1.

Note 5: The $\overline{RST}$ output pin on the LTC2903-1 has an internal pull-up to V2 (for options A1, B1 and C1) of typically 10µA. However, for faster rise times or for V_{OH} voltages greater than V2, use an external pull-up resistor. The internal pull-up is connected to V1 for options D1 and E1.

Note 6: For options A1, B1 and C1, the $\overline{RST}$ pulldown current is derived from V1, V2 and V3. For options D1 and E1, pulldown strength is derived from V1.

TYPICAL PERFORMANCE CHARACTERISTICS

5V Threshold Voltage vs Temperature

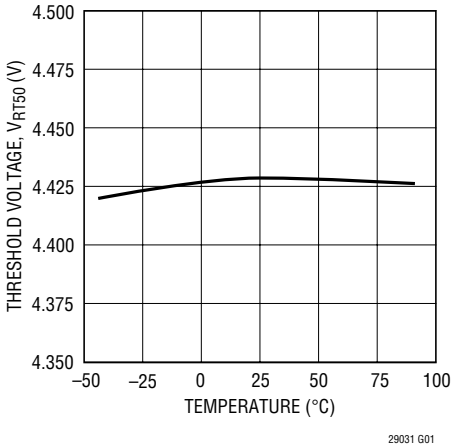

3.3V Threshold Voltage vs Temperature

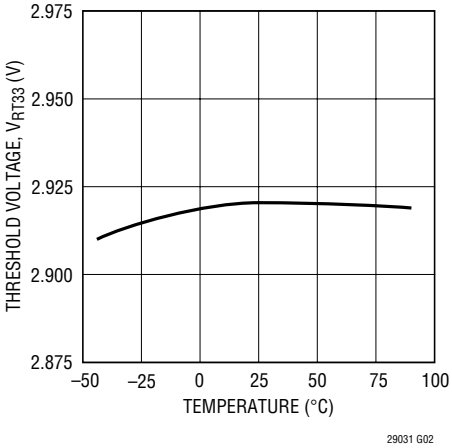

2.5V Threshold Voltage vs Temperature

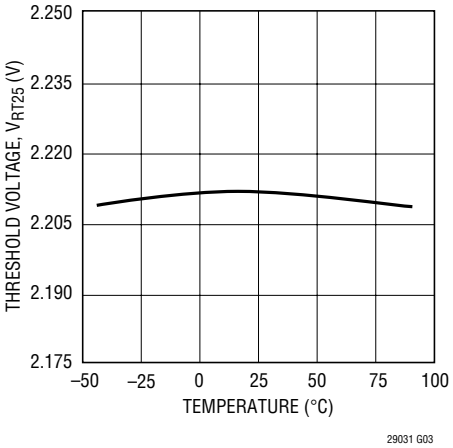

1.8V Threshold Voltage vs Temperature

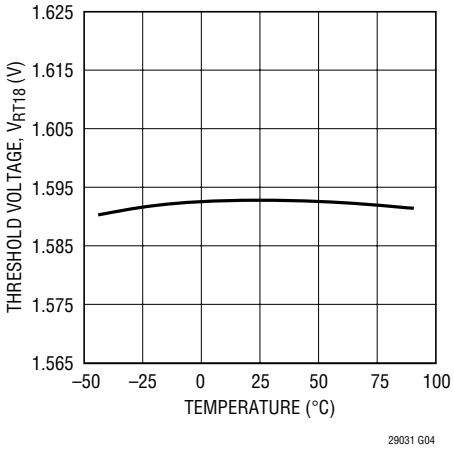

ADJ Threshold Voltage vs Temperature

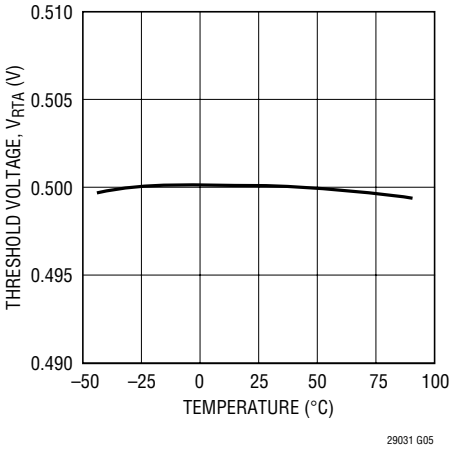

–5.2V Threshold Voltage vs Temperature

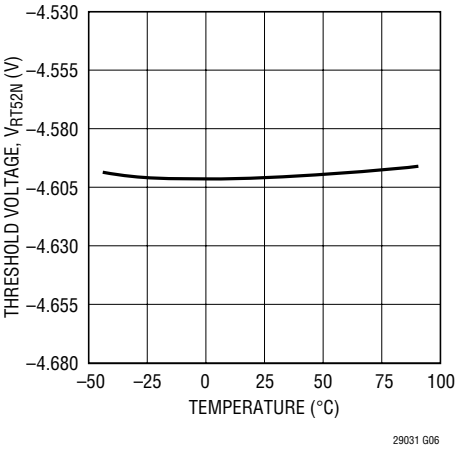

Supply Currents vs Temperature (LTC2903-A1)

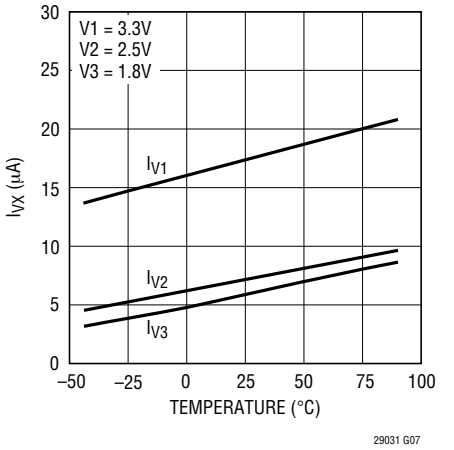

Supply Currents vs Temperature (LTC2903-B1)

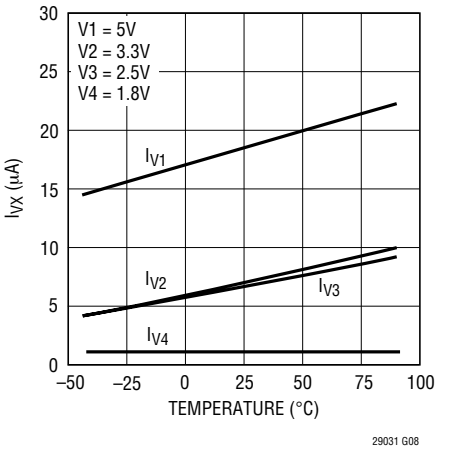

Supply Currents vs Temperature (LTC2903-C1)

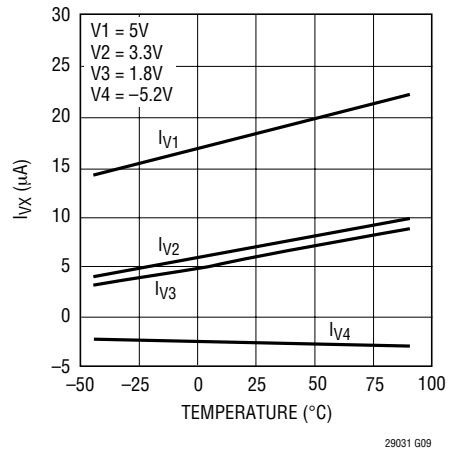

TYPICAL PERFORMANCE CHARACTERISTICS

Supply Currents vs Temperature

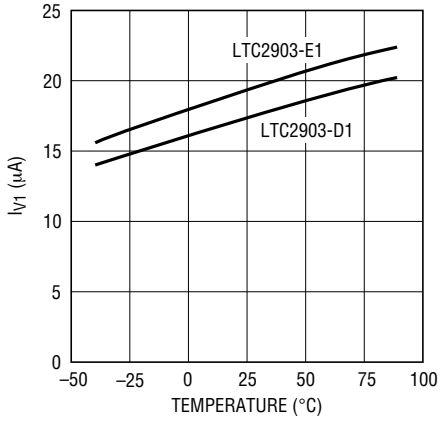

Transient Duration vs Comparator Overdrive

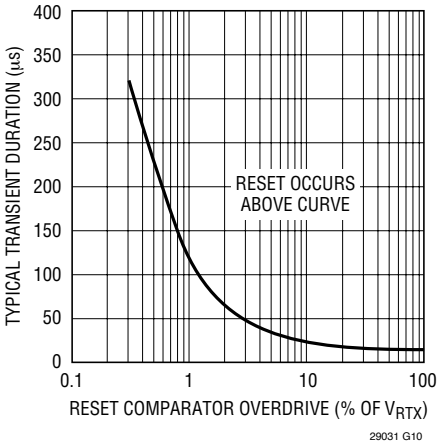

Reset Time-Out Period vs Temperature

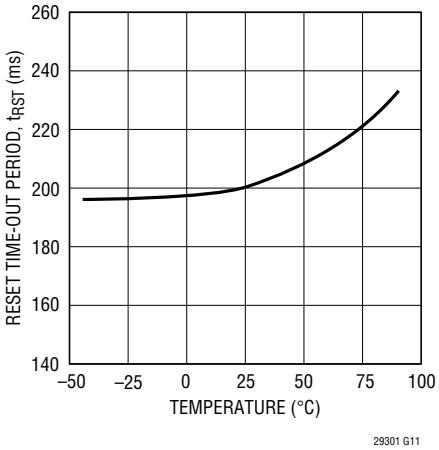

$\overline{RST}$ Output Voltage with 10k Pull-Up to V1

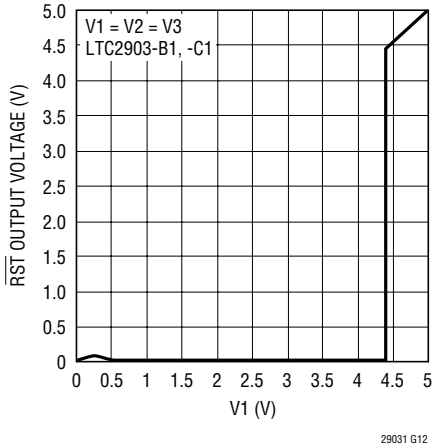

$\overline{RST}$ Output Voltage with 10k Pull-Up to V1

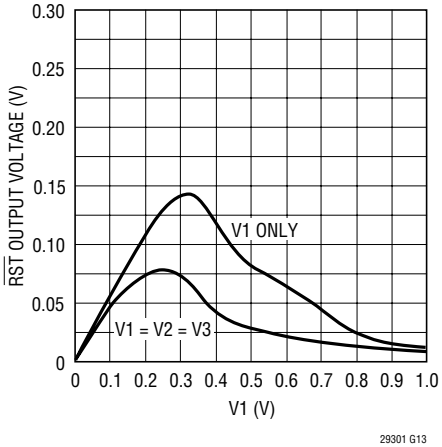

Low Voltage Reset Pull-Down Performance vs External Pull-Up Current and Input Supply Voltage

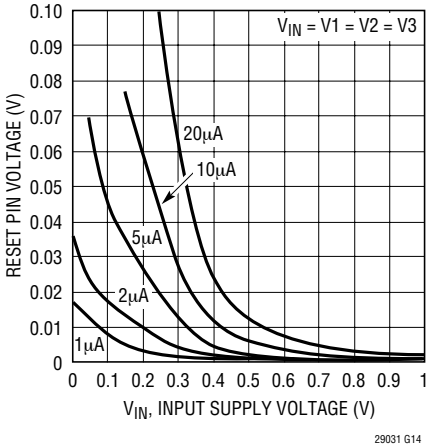

$\overline{RST}$ Current Sink Capability vs V_{CC}

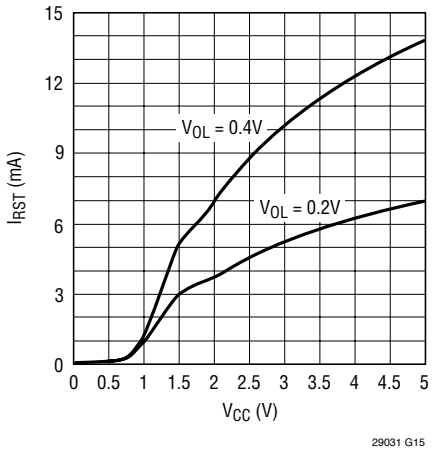

$\overline{RST}$ Voltage Output Low vs $\overline{RST}$ Sink Current

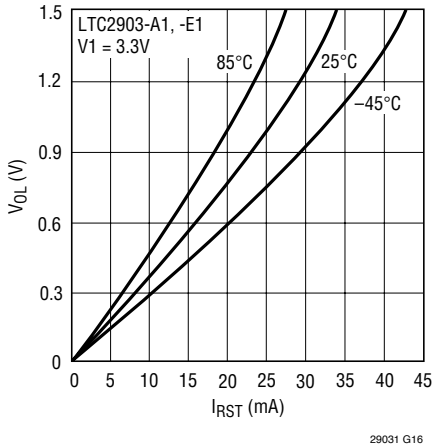

$\overline{RST}$ Voltage Output Low vs $\overline{RST}$ Sink Current

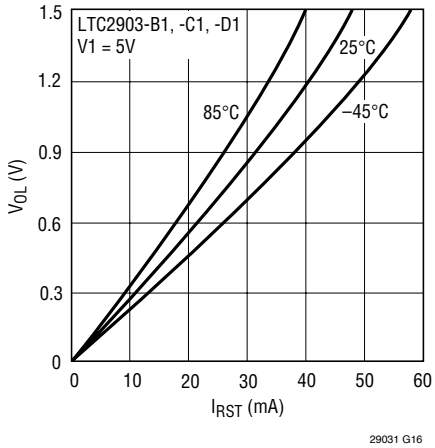

TYPICAL PERFORMANCE CHARACTERISTICS

$\overline{RST}$ Pull-Up Current vs V2

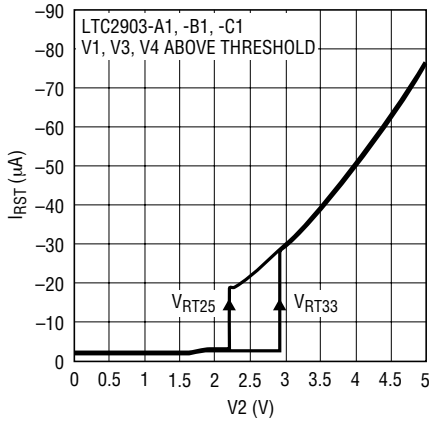

$\overline{RST}$ Pull-Up Current vs V1

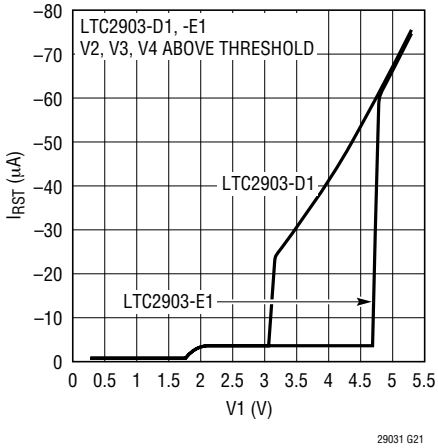

$\overline{RST}$ Pull-Up Current vs External Pull-Down Voltage on $\overline{RST}$

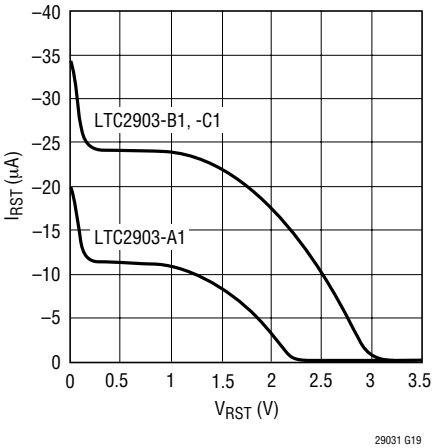

$\overline{RST}$ Pull-Up Current vs External Pull-Down Voltage on $\overline{RST}$

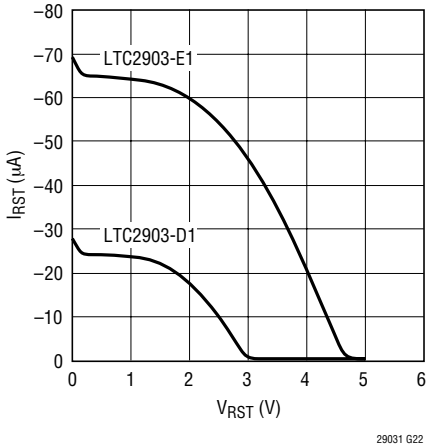

PIN FUNCTIONS

V1 (Pin 1): Voltage Input 1. Internal V_{CC} is generated from the greater voltage on the V1 and V2 inputs. V_{CC} = V1 for options D1 and E1. Bypass this pin to ground with a 0.1μF (or greater) capacitor.

GND (Pin 2): Ground.

V2 (Pin 3): Voltage Input 2. Internal V_{CC} is generated from the greater voltage on the V1 and V2 inputs. V_{CC} = V1 for options D1 and E1. For option A1, B1, C1 bypass this pin to ground with a 0.1μF (or greater) capacitor. V2 is an adjustable input for options D1 and E1. See Table 1b for recommended ADJ resistor values.

V3 (Pin 4): Voltage Input 3. This input assists the $\overline{RST}$ pull-down circuitry below 1V (for options A1, B1 and C1 only). V3 is an adjustable input for options D1 and E1. See Table 1b for recommended ADJ resistor values.

V4 (Pin 5): Voltage Input 4. Table 1 lists the recommended ADJ resistor values for options A1, B1 and C1. See Table 1b for options D1 and E1.

$\overline{RST}$ (Pin 6): Reset Logic Output. Pulls low when any voltage input is below reset threshold and held low for 200ms after all voltage inputs exceed threshold. The pin contains a weak pull-up to V2 (V1 for options D1 and E1). Use an external pull-up for faster rise times or output voltages greater than V2 (V1 for options D1 and E1).

TIMING DIAGRAM

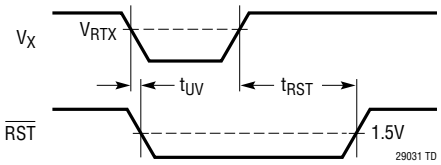

BLOCK DIAGRAMS

(LTC2903-A1, LTC2903-B1)

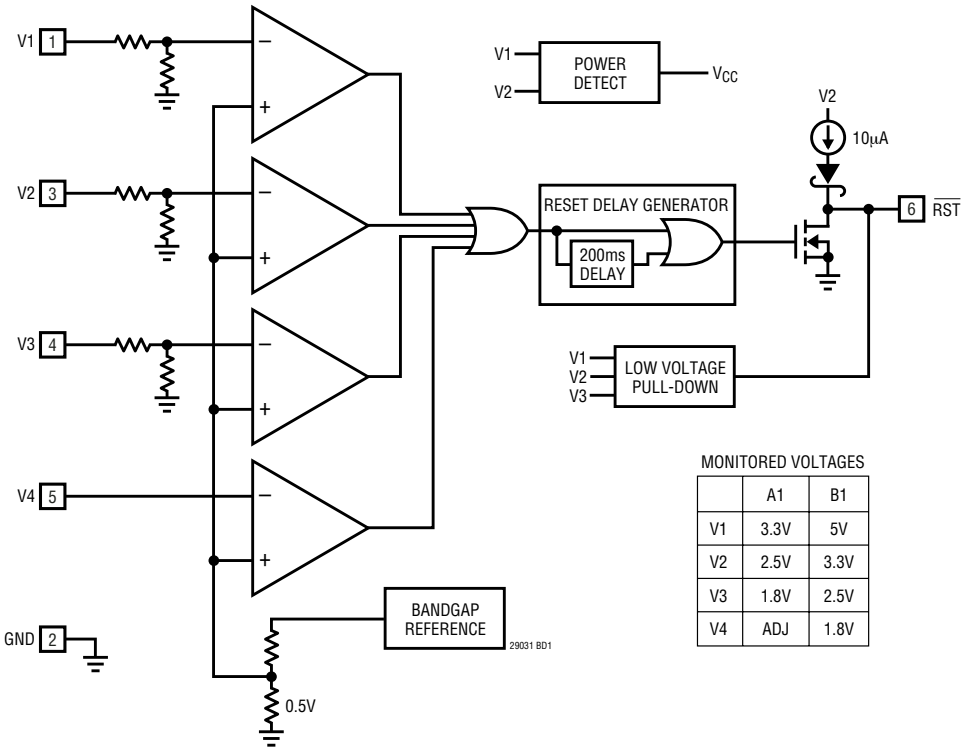

MONITORED VOLTAGES

	A1	B1
V1	3.3V	5V
V2	2.5V	3.3V
V3	1.8V	2.5V
V4	ADJ	1.8V

(LTC2903-C1)

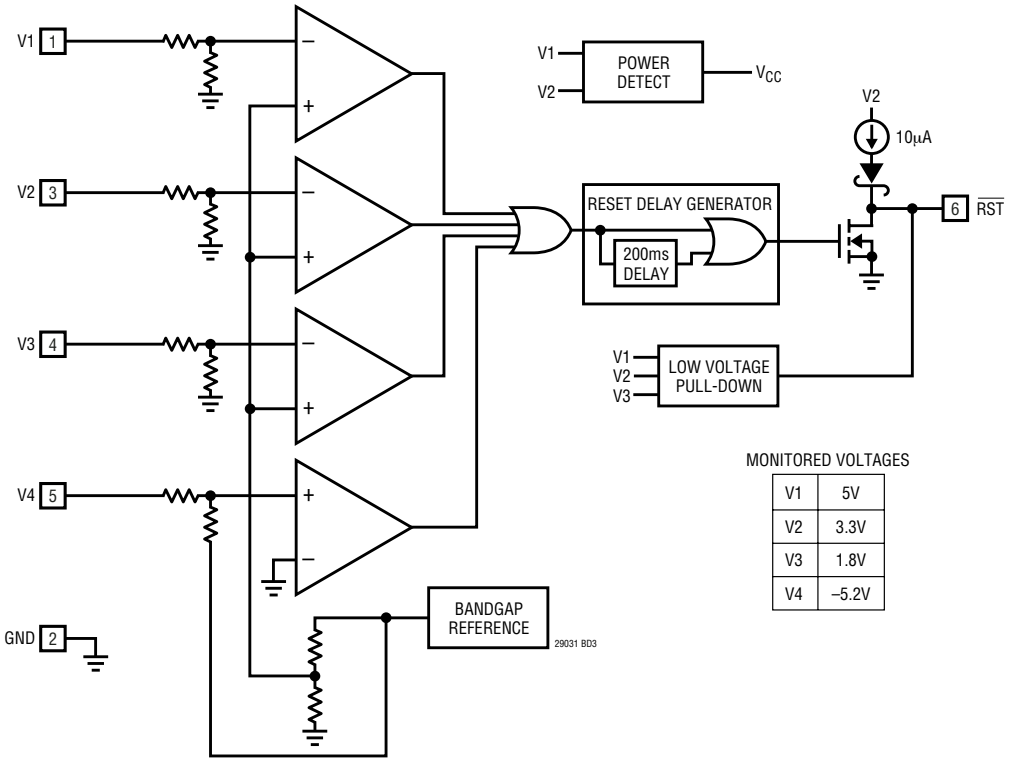

MONITORED VOLTAGES

V1	5V
V2	3.3V
V3	1.8V
V4	–5.2V

BLOCK DIAGRAMS

(LTC2903-D1, LTC2903-E1)

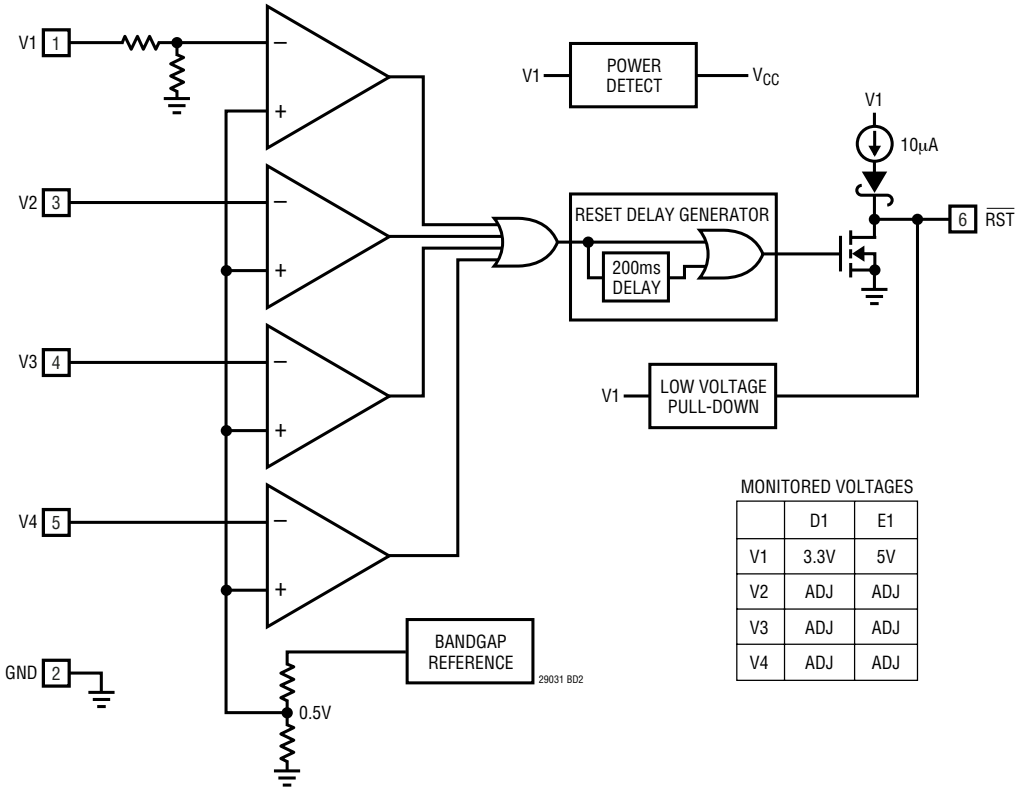

MONITORED VOLTAGES

	D1	E1
V1	3.3V	5V
V2	ADJ	ADJ
V3	ADJ	ADJ
V4	ADJ	ADJ

APPLICATIONS INFORMATION

Power-Up

The LTC2903-1 issues a logic low on the $\overline{RST}$ output when an input supply voltage resides below the prescribed threshold voltage. Ideally, the $\overline{RST}$ logic output would remain low with the input supply voltage down to zero volts. Most supervisors lack pull-down capability below 1V. The LTC2903-1 power supply supervisors incorporate a new low voltage pull-down circuit that can hold the $\overline{RST}$ line low with as little as 200mV of input supply voltage on V1, V2 or V3 (V1 only for options D1 and E1). The pull-down circuit helps maintain a low impedance path to ground, reducing the risk of floating the $\overline{RST}$ node to undetermined voltages. Such voltages may trigger external logic causing erroneous reset operation(s). Furthermore, a mid-scale voltage could cause external circuits to operate in the middle of their voltage transfer characteristic, consuming more quiescent current than normal. These conditions could cause serious system reliability problems.

When V1, V2 and V3 are ramped simultaneously (for options A1, B1 and C1 only), the reset pull-down current increases up to three times the current that may be pulled with a single input. Figure 1 demonstrates the reset pin

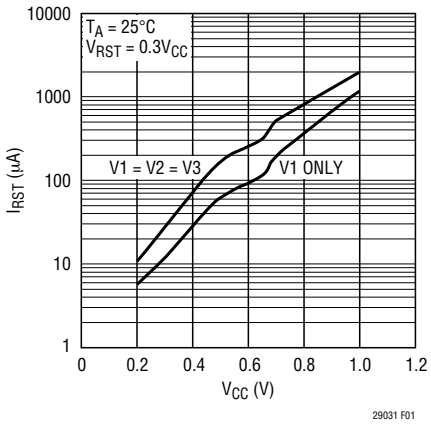

Figure 1. $\overline{RST}$ Pull-Down Current vs V_{CC}

APPLICATIONS INFORMATION

current sinking ability for single supply and triple supply-tracking applications. Figure 2 shows a detailed view of the reset pin voltage with a 10k pull-up resistor to V1.

The LTC2903-1 supervisors derive their internal supply voltage (V_{CC}) automatically from the greater voltage on the V1 and V2 inputs (V_{CC} = V1 for options D1 and E1). With all supply inputs above threshold, the quiescent current drawn from V_{CC} is 20μA (typ).

Supply Monitoring

The LTC2903-1 accurately monitors four inputs in a small 6-lead SOT-23 package. The low voltage reset output includes an integrated 200ms reset delay timer. The reset line pulls high 200ms after all voltage inputs exceed their respective thresholds. The reset output remains low during power-up, power-down and brownout conditions on any of the voltage inputs.

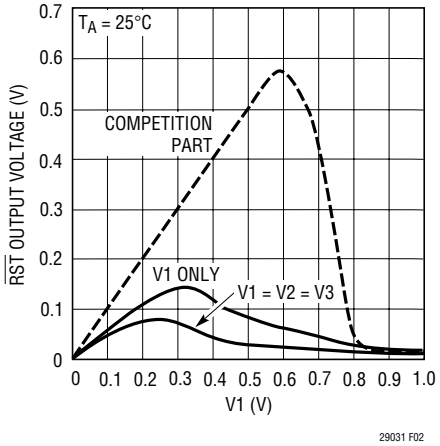

Figure 2. $\overline{RST}$ Output Voltage with a 10k Pull-Up to V1 (Enlarged Area of Detail)

Triple Adjustable Options (LTC2903-D1, LTC2903-E1)

LTC2903-D1 and LTC2903-E1 provide 3 adjustable inputs: V2, V3 and V4. The V1 threshold is 3.086V (3.3V, 5%) for option D1 and 4.675 (5V, 5%) for option E1. For each supply monitored by an adjustable input, connect an external resistor divider (R1 and R2) between the positive voltage being sensed and ground. The tap point for each divider is then connected to each adjustable input. All adjustable inputs are compared to an internal 0.5V reference.

Figure 3 shows how each adjustable input is configured.

Calculate the trip voltage from:

$$V_{TRIP} = 0.5V\left(1+\frac{R1}{R2}\right)$$

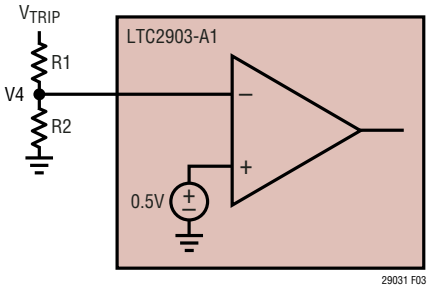

Figure 3. Setting the Positive Adjustable Trip Point

APPLICATIONS INFORMATION

Table 1a contains suggested 1% resistor values for the ADJ inputs to obtain nominal –11.5% thresholds. Connect unused supervisor inputs to the highest supply voltage available.

Table 1a. Suggested 1% Resistor Values for the –11.5% ADJ Inputs

V_{SUPPLY} (V)	V_{TRIP} (V)	R1 (kΩ)	R2(kΩ)
12	10.75	2050	100
10	8.95	1690	100
8	7.15	1330	100
7.5	6.7	1240	100
6	5.38	976	100
5	4.435	787	100
3.3	2.935	487	100
3	2.66	432	100
2.5	2.2	340	100
1.8	1.605	221	100
1.5	1.325	165	100
1.2	1.065	113	100
1	0.884	76.8	100
0.9	0.795	59	100

Table 1b contains suggested 1% resistor values for the ADJ inputs to obtain nominal –6.5% thresholds.

Table 1b. Suggested 1% Resistor Values for the –6.5% ADJ Inputs

V_{SUPPLY} (V)	V_{TRIP} (V)	R1 (kΩ)	R2(kΩ)
12	11.25	2150	100
10	9.4	1780	100
8	7.5	1400	100
7.5	7	1300	100
6	5.6	1020	100
5	4.725	845	100
3.3	3.055	511	100
3	2.82	464	100
2.5	2.325	365	100
1.8	1.685	237	100
1.5	1.410	182	100
1.2	1.120	124	100
1.0	0.933	86.6	100
0.9	0.840	68.1	100
0.8	0.750	49.9	100
0.7	0.655	30.9	100
0.6	0.561	12.1	100

Implications of Threshold Accuracy

Specifying system voltage margin for worst-case operation requires consideration of three factors: power supply tolerance, IC supply voltage tolerance and supervisor reset threshold accuracy. Highly accurate supervisors ease the design challenge by decreasing the overall voltage margin required for reliable system operation. Consider a 5V system with a ±10% power supply tolerance band. System ICs powered by this supply must operate reliably within this band (and a little more, as explained below). The bottom of the supply tolerance band, at 4.5V (5V – 10%), is the exact voltage at which a *perfectly accurate* supervisor generates a reset. Such a perfectly accurate supervisor does not exist—the actual reset threshold may vary over a specified band (±1.5% for the LTC2903-1 supervisors). Figure 4 shows the typical relative threshold accuracy for all four inputs, over temperature.

With this variation of reset threshold in mind, the nominal reset threshold of the supervisor resides *below* the minimum supply voltage, just enough so that the reset threshold band and the power supply tolerance bands do not overlap. If the two bands overlap, the supervisor could generate a false or nuisance reset when the power supply remains within its specified tolerance band (say, at 4.6V).

Adding half of the reset threshold accuracy spread (1.5%) to the ideal 10% thresholds puts the LTC2903-1 thresholds at 11.5% (typ) below the nominal input voltage. For example, the 5V typical threshold is 4.425V, or 75mV below the ideal threshold of 4.500V. The guaranteed threshold lies in the band between 4.500V and 4.350V over temperature.

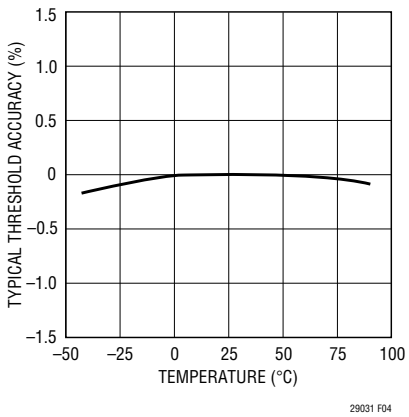

Figure 4. LTC2903 Typical Threshold Accuracy vs Temperature

APPLICATIONS INFORMATION

The powered system must work reliably down to the lowest voltage in the threshold band or risk malfunction before the reset line falls. In the 5V example, using the 1.5% accurate supervisor, the system ICs must work down to 4.35V. System ICs working with a ±2.5% accurate supervisor must operate down to 4.25V, increasing the required system voltage margin and the probability of system malfunction.

In any supervisory application, supply noise riding on the monitored DC voltage can cause spurious resets, particularly when the monitored voltage approaches the reset threshold. A less than desirable but commonly used technique used to mitigate this problem adds hysteresis to the input comparator. The amount of added hysteresis, usually specified as a percentage of the trip threshold, effectively degrades the advertised accuracy of the part. To maintain high accuracy, the LTC2903-1 does not use hysteresis.

To minimize spurious resets while maintaining threshold accuracy, the LTC2903-1 employs two forms of noise filtering. The first line of defense incorporates proprietary tailoring of the comparator transient response. Transient events receive electronic integration in the comparator and must exceed a certain magnitude and duration to cause the comparator to switch. Figure 5 illustrates the typical transient duration versus comparator overdrive (as a percentage of the trip threshold V_{RT}) required to trip the comparators. Once any comparator is switched, the reset line pulls low. The reset time-out counter starts once all inputs return above threshold. The nominal reset delay time is 200ms. The counter clears whenever any input drops back below threshold. This reset delay time effectively provides further filtering of the voltage inputs. A noisy input with frequency components of sufficient magnitude above $f = 1/t_{RST} = 5Hz$ holds the reset line low, preventing oscillatory behavior on the reset line.

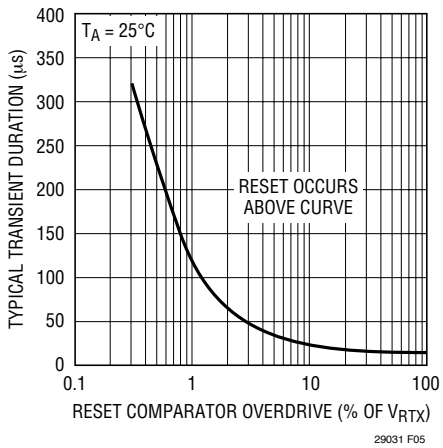

Figure 5. Typical Transient Duration vs Overdrive Required to Trip Comparator

Although all four comparators have built-in glitch filtering, use bypass capacitors on the V1 and V2 inputs because the greater of V1 or V2 supplies the V_{CC} (options A1, B1 and C1) for the part (a 0.1µF ceramic capacitor satisfies most applications). Apply filter capacitors on the V3 and V4 inputs in extremely noisy situations. Options D1 and E1 require a bypass capacitor only on V1. Apply filter capacitors on V2, V3 and V4 adjustable inputs in extremely noisy situations.

Reset Output Rise and Fall Time Estimation

The reset output line contains a weak pull-up current source to the V2 supply (V1 for options D1 and E1). Use an external pull-up resistor when the output needs to pull to another voltage and/or when the reset output needs a faster rise time. The open-drain output allows for wired-OR connections when more than one signal needs to pull down on the reset line. Estimate output rise time for the open-drain output without an external pull-up using:

$$t_{RISE} \approx 2.2 \bullet R_{PU} \bullet C_{LOAD}$$

where R_{PU} is the on-resistance of the pull-up transistor and C_{LOAD} is the external load capacitance on the pin. At room temperature, the average R_{PU} is approximately 50kΩ. When externally pulling up to voltages higher than V2 (V1 for options D1 and E1), an internal network automatically protects the weak pull-up circuitry from reverse currents.

The reset output has very strong pull-down capability. Estimate the output fall time using:

$$t_{FALL} \approx 2.2 \bullet R_{PD} \bullet C_{LOAD}$$

where R_{PD} is the on-resistance of the pull-down transistor and C_{LOAD} is the external load capacitance on the pin. At room temperature, the average R_{PD} is approximately 40Ω. With a 150pF load capacitance the reset line can pull down in about 13ns.

TYPICAL APPLICATIONS

Quad Supply Monitor with Adjustable Input

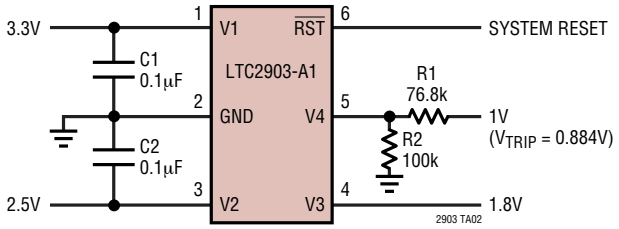

Fixed Quad Supply Monitor with LED Indication on $\overline{RST}$

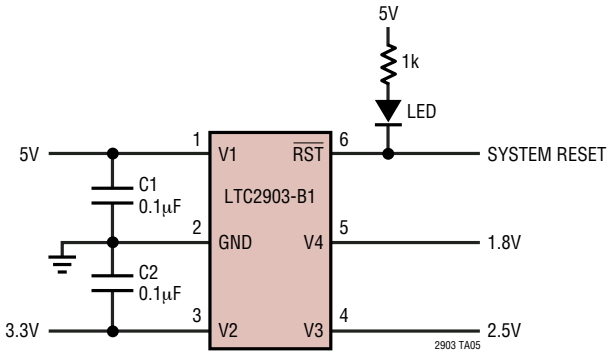

TYPICAL APPLICATIONS

Quad Supply Monitor with Unused Input Pulled Above Threshold

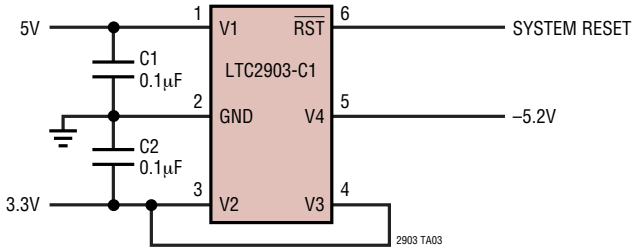

Quad Supply Monitor with 3 Adjustable Inputs Monitoring 5% Supplies

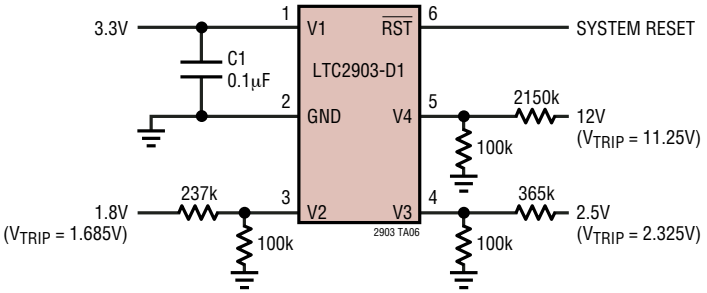

PACKAGE DESCRIPTION

S6 Package
6-Lead Plastic TSOT-23
(Reference LTC DWG # 05-08-1636)

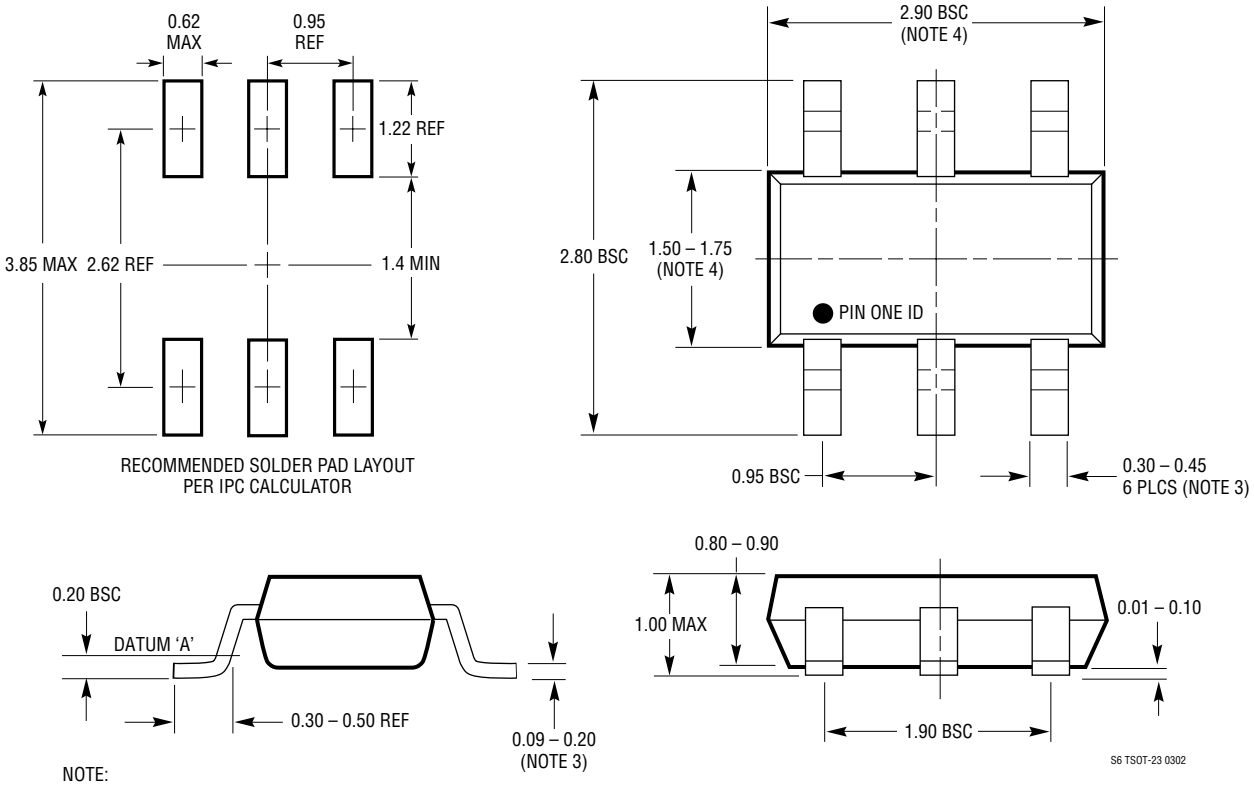

NOTE:
1. DIMENSIONS ARE IN MILLIMETERS
2. DRAWING NOT TO SCALE
3. DIMENSIONS ARE INCLUSIVE OF PLATING
4. DIMENSIONS ARE EXCLUSIVE OF MOLD FLASH AND METAL BURR
5. MOLD FLASH SHALL NOT EXCEED 0.254mm
6. JEDEC PACKAGE REFERENCE IS MO-193

Information furnished by Linear Technology Corporation is believed to be accurate and reliable. However, no responsibility is assumed for its use. Linear Technology Corporation makes no representation that the interconnection of its circuits as described herein will not infringe on existing patent rights.

TYPICAL APPLICATION

Quad Supply Monitor with Manual Reset Button

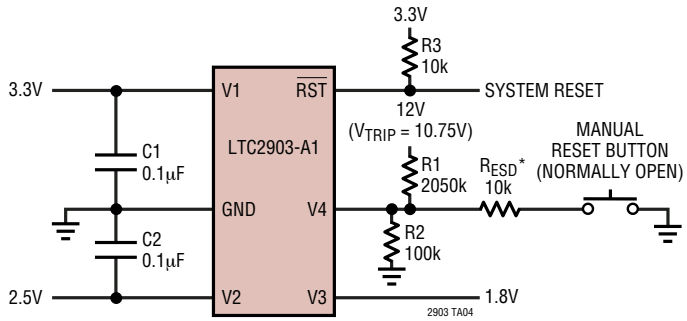

RELATED PARTS

PART NUMBER	DESCRIPTION	COMMENTS
LTC690	5V Supply Monitor, Watchdog Timer and Battery Backup	4.65 Threshold
LTC694-3.3	3.3V Supply Monitor, Watchdog Timer and Battery Backup	2.9V Threshold
LTC699	5V Supply Monitor and Watchdog Timer	4.65 Threshold
LTC1232	5V Supply Monitor, Watchdog Timer and Pushbutton Reset	4.37V/4.62V Threshold
LTC1326	Micropower Precision Triple Supply Monitor for 5V, 3.3V and ADJ	4.725V, 3.118V, 1V Thresholds (±0.75%)
LTC1326-2.5	Micropower Precision Triple Supply Monitor for 2.5V, 3.3V and ADJ	2.363V, 3.118V, 1V Thresholds (±0.75%)
LTC1536	Precision Triple Supply Monitor for PCI Applications	Meets PCI t_{FAIL} Timing Specifications
LTC1726-2.5	Micropower Triple Supply Monitor for 2.5V, 3.3V and ADJ	Adjustable $\overline{\text{RESET}}$ and Watchdog Time Outs
LTC1726-5	Micropower Triple Supply Monitor for 5V, 3.3V and ADJ	Adjustable $\overline{\text{RESET}}$ and Watchdog Time Outs
LTC1727-2.5/LTC1727-5	Micropower Triple Supply Monitors with Open-Drain Reset	Individual Monitor Outputs in MSOP
LTC1728-1.8/LTC1728-3.3	Micropower Triple Supply Monitors with Open-Drain Reset	5-Lead SOT-23 Package
LTC1728-2.5/LTC1728-5	Micropower Triple Supply Monitors with Open-Drain Reset	5-Lead SOT-23 Package
LTC1985-1.8	Micropower Triple Supply Monitor with Push-Pull Reset Output	5-Lead SOT-23 Package
LTC2900	Quad Voltage Monitor in MSOP	16 User Selectable Combinations, ±1.5% Threshold Accuracy
LTC2901	Quad Voltage Monitor with Watchdog	16 User Selectable Combinations, Adjustable Timers
LTC2902	Quad Voltage Monitor with $\overline{\text{RST}}$ Disable	16 User Selectable Combinations, Adjustable Tolerance
LTC2904/LTC2905/ LTC2906/LTC2907	Precision Dual Supply Monitors	Pin Selectable Thresholds
LTC2908	Precision Six Supply Monitor	8-Lead SOT-23 and DFN Packages
LTC2920-1/LTC2920-2	Single/Dual Power Supply Margining Controller	<0.4% Margin Voltage Precision
LTC2921/LTC2922	Power Supply Trackers with Input Monitors	3 (LTC2921) and 5 (LTC2922) Remote Sense Switches
LTC2923	Power Supply Tracking Controller	Tracks Up and Down, Supply Sequencing

Linear Technology Corporation
1630 McCarthy Blvd., Milpitas, CA 95035-7417
(408) 432-1900 • FAX: (408) 434-0507 • www.linear.com

LT/TP 1004 1K • PRINTED IN THE USA
© LINEAR TECHNOLOGY CORPORATION 2003