Improved Industry Standard Serial 12-Bit Multiplying DACs

FEATURES

- **Improved Direct Replacement for AD7543 and DAC-8143**
- **Low Cost**
- **DNL and INL Over Temperature: ±0.5LSB**
- Easy, Fast and Flexible Serial Interface
- Daisy-Chain 3-Wire Interface for Multiple DAC Systems (LTC8143)
- 1LSB Maximum Gain Error Over Temperature Eliminates Adjustment
- Asynchronous Clear Input for Initialization
- Four-Quadrant Multiplication
- Low Power Consumption
- 16-Pin PDIP and SO Packages

APPLICATIONS

- Process Control and Industrial Automation
- Remote Microprocessor-Controlled Systems
- Digitally Controlled Filters and Power Supplies
- Programmable Gain Amplifiers
- Automatic Test Equipment

DESCRIPTION

The LTC®7543/LTC8143 are serial-input 12-bit multiplying digital-to-analog converters (DACs). They are superior pin compatible replacements for the AD7543 and DAC-8143. Improvements include better accuracy, better stability over temperature and supply variations, lower sensitivity to output amplifier offset, tighter timing specifications and lower output capacitance.

An easy-to-use serial interface includes an asynchronous CLEAR input for systems requiring initialization to a known state. The LTC8143 has a serial data output to allow daisy-chaining multiple DACs on a 3-wire interface bus.

These DACs are extremely versatile. They can be used for 2-quadrant and 4-quadrant multiplying, programmable gain and single supply applications, such as noninverting voltage output and biased or offset ground mode.

Parts are available in 16-pin PDIP and SO packages and are specified over the extended industrial temperature range, –40°C to 85°C.

, LTC and LT are registered trademarks of Linear Technology Corporation.

TYPICAL APPLICATION

Multiplying DAC Has Easy 3-Wire Serial Interface

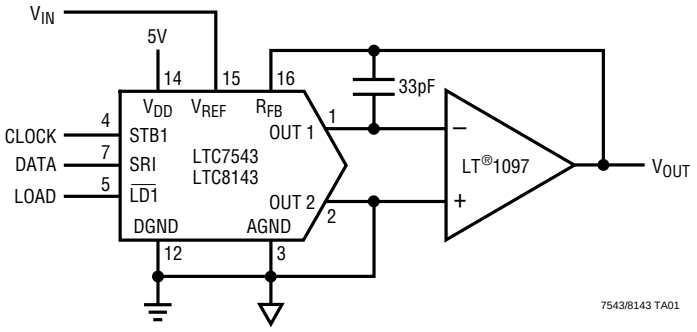

Integral Nonlinearity Over Temperature

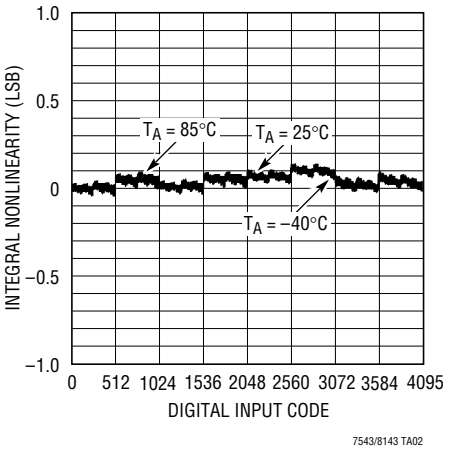

ABSOLUTE MAXIMUM RATINGS

V_{DD} to AGND ..... −0.5V to 7V
V_{DD} to DGND ..... −0.5V to 7V
AGND to DGND ..... V_{DD} + 0.5V
DGND to AGND ..... V_{DD} + 0.5V
Digital Inputs to DGND ..... −0.5V to (V_{DD} + 0.5V)
V_{OUT1}, V_{OUT2} to AGND ..... −0.5V to (V_{DD} + 0.5V)
V_{REF} to AGND, DGND ..... ±25V
V_{RFB} to AGND, DGND ..... ±25V
Maximum Junction Temperature ..... 150°C
Operating Temperature Range ..... −40°C to 85°C
Storage Temperature Range ..... −65°C to 150°C
Lead Temperature (Soldering, 10 sec) ..... 300°C

PACKAGE/ORDER INFORMATION

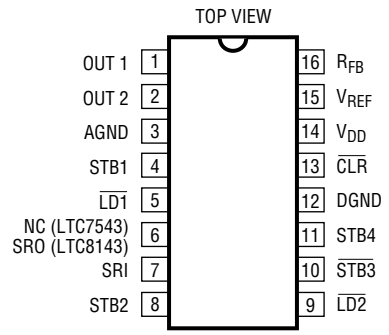

N PACKAGE
16-LEAD PDIP
SW PACKAGE
16-LEAD PLASTIC SO WIDE

T_{JMAX} = 150°C, θ_{JA} = 100°C/W (N)
T_{JMAX} = 150°C, θ_{JA} = 130°C/W (SW)

ORDER PART NUMBER
LTC7543GKN
LTC7543KN
LTC7543GKSW
LTC7543KSW
LTC8143EN
LTC8143FN
LTC8143ESW
LTC8143FSW

Consult factory for Military grade parts.

ACCURACY CHARACTERISTICS – LTC7543

V_{DD} = 5V, V_{REF} = 10V, V_{OUT1} = V_{OUT2} = AGND = DGND =0V, T_A = T_{MIN} to T_{MAX}, unless otherwise specified.

SYMBOL	PARAMETER	CONDITIONS		LTC7543GK MIN	LTC7543GK TYP	LTC7543GK MAX	LTC7543K MIN	LTC7543K TYP	LTC7543K MAX	UNITS
	Resolution		●	12			12			Bits
INL	Integral Nonlinearity (Relative Accuracy)	(Note 1)	●			±0.5			±0.5	LSB
DNL	Differential Nonlinearity	Guaranteed Monotonic, T_{MIN} to T_{MAX}	●			±0.5			±0.5	LSB
GE	Gain Error	(Note 2) T_A = 25°C				±1			±2	LSB
		T_{MIN} to T_{MAX}	●			±1			±2	LSB
	Gain Temperature Coefficient (ΔGain/ΔTemp)	(Note 3)	●		1	5		1	5	ppm/°C
I_{LKG}	Output Leakage Current	(Note 4) T_A = 25°C				±1			±1	nA
		T_{MIN} to T_{MAX}	●			±10			±10	nA
	Zero-Scale Error	T_A = 25°C				±0.006			±0.006	LSB
		T_{MIN} to T_{MAX}	●			±0.06			±0.06	LSB
PSRR	Power Supply Rejection Ratio	V_{DD} = 5V ±5%	●		±0.0001	±0.002		±0.0001	±0.002	%/%

ACCURACY CHARACTERISTICS – LTC8143

V_{DD} = 5V, V_{REF} = 10V, V_{OUT1} = V_{OUT2} = AGND = DGND = 0V, T_A = T_{MIN} to T_{MAX}, unless otherwise specified.

SYMBOL	PARAMETER	CONDITIONS		LTC8143E MIN	LTC8143E TYP	LTC8143E MAX	LTC8143F MIN	LTC8143F TYP	LTC8143F MAX	UNITS
	Resolution		●	12			12			Bits
INL	Integral Nonlinearity (Relative Accuracy)	(Note 1)	●			±0.5			±1	LSB
DNL	Differential Nonlinearity	Guaranteed Monotonic, T_{MIN} to T_{MAX}	●			±0.5			±1	LSB
GE	Gain Error	(Note 2) T_A = 25°C				±1			±2	LSB
		T_{MIN} to T_{MAX}	●			±2			±2	LSB
	Gain Temperature Coefficient (ΔGain/ΔTemp)	(Note 3)	●		1	5		1	5	ppm/°C
I_{LKG}	Output Leakage Current	(Note 4) T_A = 25°C				±5			±5	nA
		T_{MIN} to T_{MAX}	●			±25			±25	nA
	Zero-Scale Error	T_A = 25°C				±0.03			±0.03	LSB
		T_{MIN} to T_{MAX}	●			±0.15			±0.15	LSB
PSRR	Power Supply Rejection Ratio	V_{DD} = 5V ±5%	●		±0.0001	±0.002		±0.0001	±0.002	%/%

ELECTRICAL CHARACTERISTICS – LTC7543/LTC8143

V_{DD} = 5V, V_{REF} = 10V, V_{OUT1} = V_{OUT2} = AGND = DGND = 0V, T_A = T_{MIN} to T_{MAX}, unless otherwise specified.

SYMBOL	PARAMETER	CONDITIONS			LTC7543/LTC8143 ALL GRADES MIN	TYP	MAX	UNITS
Reference Input								
R_{REF}	V_{REF} Input Resistance	(Note 5)		●	8	11	15	kΩ
AC Performance (Note 3)								
	Output Current Settling Time	(Notes 6, 7)		●		0.25	1	µs
	Multiplying Feedthrough Error	V_{REF} = ±10V, 10kHz Sinewave		●		0.8	2	mV_{P-P}
	Digital-to-Analog Glitch Energy	(Notes 6, 8)		●		2	20	nV-sec
THD	Total Harmonic Distortion	(Note 9)		●		–108	–92	dB
	Output Noise Voltage Density	(Note 10)		●			13	nV/√Hz
Analog Outputs (Note 3)								
C_{OUT}	Output Capacitance	DAC Register Loaded to All 1s	C_{OUT1}	●		60	90	pF
			C_{OUT2}	●		20	60	pF
		DAC Register Loaded to All 0s	C_{OUT1}	●		30	60	pF
			C_{OUT2}	●		50	90	pF
Digital Inputs								
V_{IH}	Digital Input High Voltage			●	2.4			V
V_{IL}	Digital Input Low Voltage			●			0.8	V
I_{IN}	Digital Input Current	V_{IN} = 0V to V_{DD}		●		0.001	±1	µA
C_{IN}	Digital Input Capacitance	(Note 3), V_{IN} = 0V		●			8	pF
Digital Outputs: SRO (LTC8143 Only)								
V_{OH}	Digital Output High	I_{OH} = –200µA		●	4			V
V_{OL}	Digital Output Low	I_{OL} = 1.6mA		●			0.4	V

ELECTRICAL CHARACTERISTICS – LTC7543/LTC8143

V_{DD} = 5V, V_{REF} = 10V, V_{OUT1} = V_{OUT2} = AGND = DGND = 0V, T_A = T_{MIN} to T_{MAX}, unless otherwise specified.

SYMBOL	PARAMETER	CONDITIONS		LTC7543/LTC8143 ALL GRADES MIN	TYP	MAX	UNITS
Timing Characteristics (Note 3)							
t_{DS1}	Serial Input to Strobe Setup Time (t_{STB} = 80ns)	STB1 Used as the Strobe	●	50	5		ns
t_{DS2}		STB2 Used as the Strobe	●	20	–5		ns
t_{DS3}		$\overline{STB3}$ Used as the Strobe	●	0	–30		ns
t_{DS4}		STB4 Used as the Strobe	●	0	–30		ns
t_{DH1}	Serial Input to Strobe Hold Time (t_{STB} = 80ns)	STB1 Used as the Strobe	●	30	10		ns
t_{DH2}		STB2 Used as the Strobe	●	50	25		ns
t_{DH3}		$\overline{STB3}$ Used as the Strobe	●	80	55		ns
t_{DH4}		STB4 Used as the Strobe	●	80	55		ns
t_{SRI}	Serial Input Data Pulse Width		●	80			ns
t_{STB1}, t_{STB2}, t_{STB3}, t_{STB4}	Strobe Pulse Width	(Note 11)	●	80			ns
$\overline{t_{STB1}}$, $\overline{t_{STB2}}$, $\overline{t_{STB3}}$, $\overline{t_{STB4}}$	$\overline{Strobe}$ Pulse Width	(Note 12)	●	80			ns
t_{LD1}, t_{LD2}	Load Pulse Width		●	140			ns
t_{ASB}	LSB Strobed into Input Register to Load DAC Register Time		●	0			ns
t_{CLR}	Clear Pulse Width		●	80			ns
SRO Timing Characteristics (LTC8143 Only)							
t_{PD}	STB2, $\overline{STB3}$, STB4 Strobe to SRO Propagation Delay	C_L = 50pF	●	220	120		ns
t_{PD1}	STB1 to SRO Propagation Delay	C_L = 50pF	●	150	80		ns
Power Supply							
V_{DD}	Supply Voltage		●	4.75	5	5.25	V
I_{DD}	Supply Current	Digital Inputs = 0V or V_{DD}	●			0.1	mA
		Digital Inputs = V_{IH} or V_{IL}	●			2	mA

The ● denotes specifications which apply over the full operating temperature range.

Note 1: ±0.5LSB = ±0.012% of full scale.

Note 2: Using internal feedback resistor.

Note 3: Guaranteed by design, not subject to test.

Note 4: I_{OUT1} with DAC register loaded with all 0s or I_{OUT2} with DAC register loaded with all 1s.

Note 5: Typical temperature coefficient is 100ppm/°C.

Note 6: OUT 1 load = 100Ω in parallel with 13pF.

Note 7: To 0.01% for a full-scale change, measured from falling edge of $\overline{LD1}$ or $\overline{LD2}$.

Note 8: V_{REF} = 0V. DAC register contents changed from all 0s to all 1s or from all 1s to all 0s.

Note 9: V_{REF} = 6V_{RMS} at 1kHz. DAC register loaded with all 1s.

Note 10: Calculation from $e_n = \sqrt{4KTRB}$ where: K = Boltzmann constant (J/K°); R = resistance (Ω); T = resistor temperature (°K); B = bandwidth (Hz).

Note 11: Minimum high time for STB1, STB2, STB4. Minimum low time for $\overline{STB3}$.

Note 12. Minimum low time for STB1, STB2, STB4. Minimum high time for $\overline{STB3}$.

BLOCK DIAGRAM

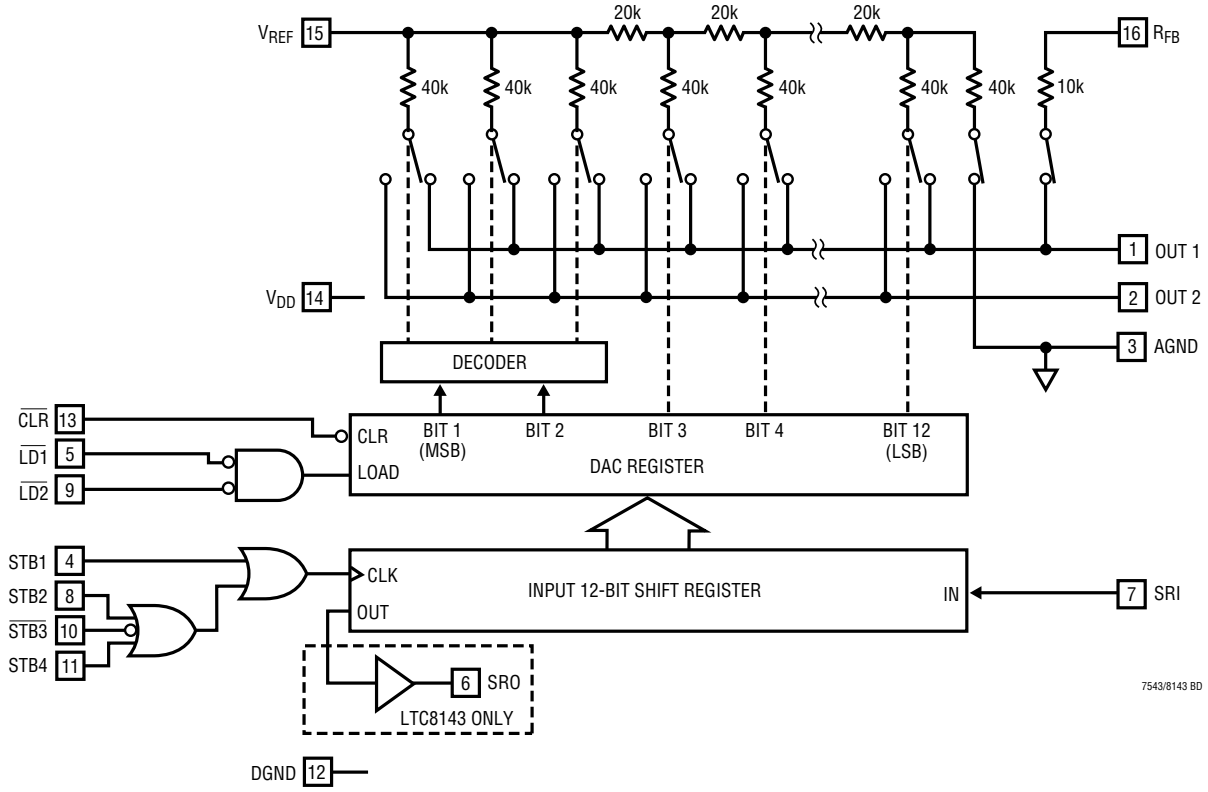

TIMING DIAGRAM

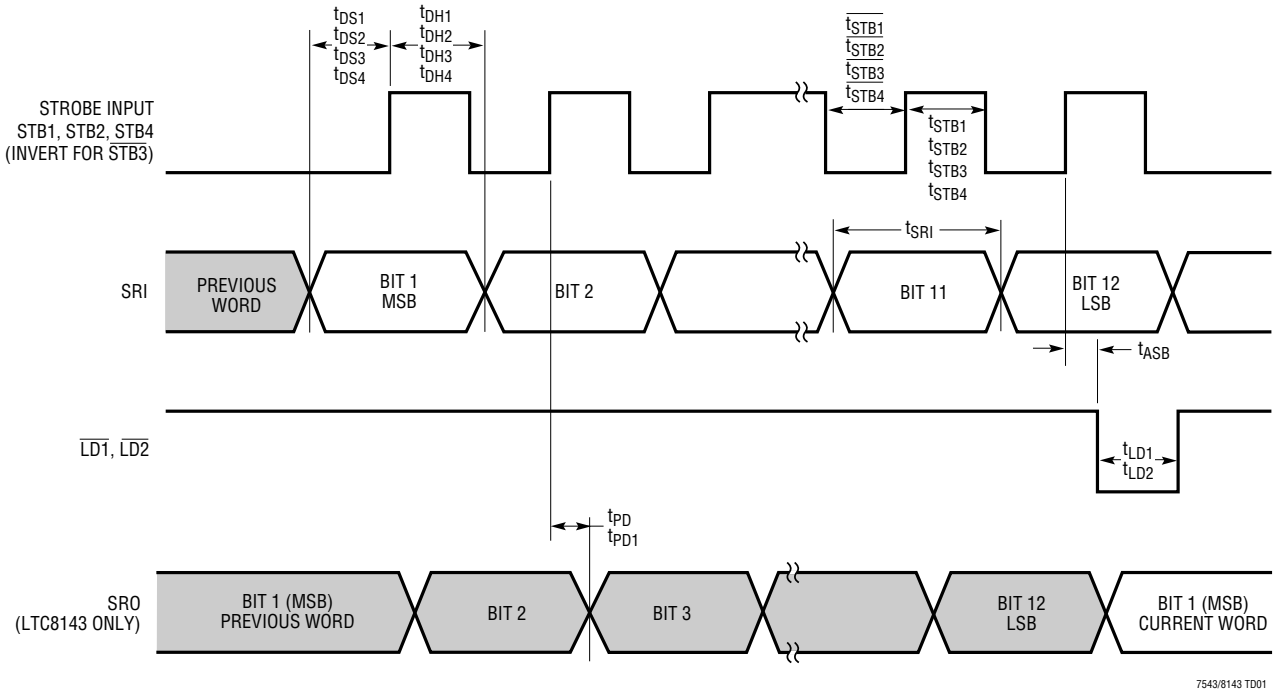

TRUTH TABLES

Table 1. LTC7543/LTC8143 Input Register

CONTROL INPUTS				Input Register Operation
STB1	STB2	$\overline{STB3}$	STB4	(LTC8143: SRO Operation)
↑	0	1	0	Serial Data Bit on SRI Loaded into Input Register, MSB First (LTC8143: Data Bit or SRI Appears on SRO Pin After 12 Clocked Bits)
0	↑	1	0	
0	0	↓	0	
0	0	1	↑	
1	X	X	X	No Input Register Operation (LTC8143: No SRO Operation)
X	1	X	X	
X	X	0	X	
X	X	X	1	

Table 2. LTC7543/LTC8143 DAC Register

CONTROL INPUTS			
$\overline{CLR}$	$\overline{LD1}$	$\overline{LD2}$	DAC Register Operation
0	X	X	Reset DAC Register to All 0s (Asynchronous Operation; No Effect on Input Register)
1	1	X	No DAC Register Operation
1	X	1	
1	0	0	Load DAC Register with the Contents of Input Register

TYPICAL APPLICATIONS

Unipolar Operation (2-Quadrant Multiplication)

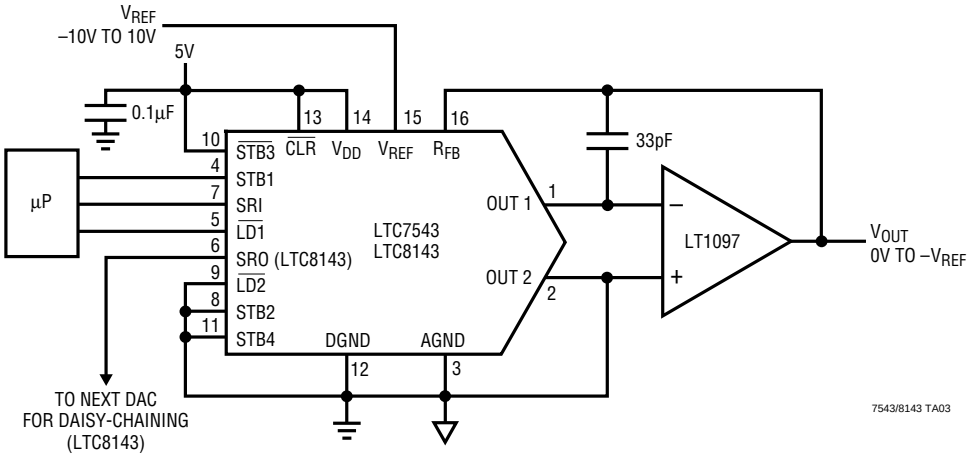

Unipolar Binary Code Table

DIGITAL INPUT BINARY NUMBER IN DAC REGISTER			ANALOG OUTPUT V_{OUT}
MSB		LSB	
1111	1111	1111	$-V_{REF}$ (4095/4096)
1000	0000	0000	$-V_{REF}$ (2048/4096) = $-V_{REF}/2$
0000	0000	0001	$-V_{REF}$ (1/4096)
0000	0000	0000	0V

TYPICAL APPLICATIONS

Bipolar Operation (4-Quadrant Multiplication)

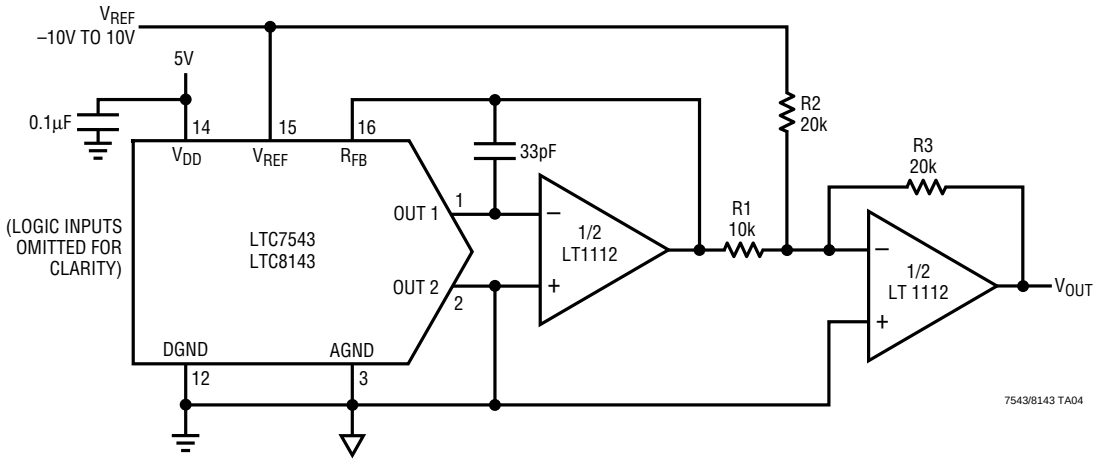

Bipolar Offset Binary Code Table

DIGITAL INPUT BINARY NUMBER IN DAC REGISTER			ANALOG OUTPUT V_{OUT}
MSB		LSB	
1111	1111	1111	V_{REF} (2047/2048)
1000	0000	0001	V_{REF} (1/2048)
1000	0000	0000	0V
0111	1111	1111	$-V_{REF}$ (1/2048)
0000	0000	0000	$-V_{REF}$ (2048/2048) = $-V_{REF}$

Information furnished by Linear Technology Corporation is believed to be accurate and reliable. However, no responsibility is assumed for its use. Linear Technology Corporation makes no representation that the interconnection of its circuits as described herein will not infringe on existing patent rights.

PACKAGE DESCRIPTION

Dimension in inches (millimeters) unless otherwise noted.

N Package
16-Lead Plastic DIP

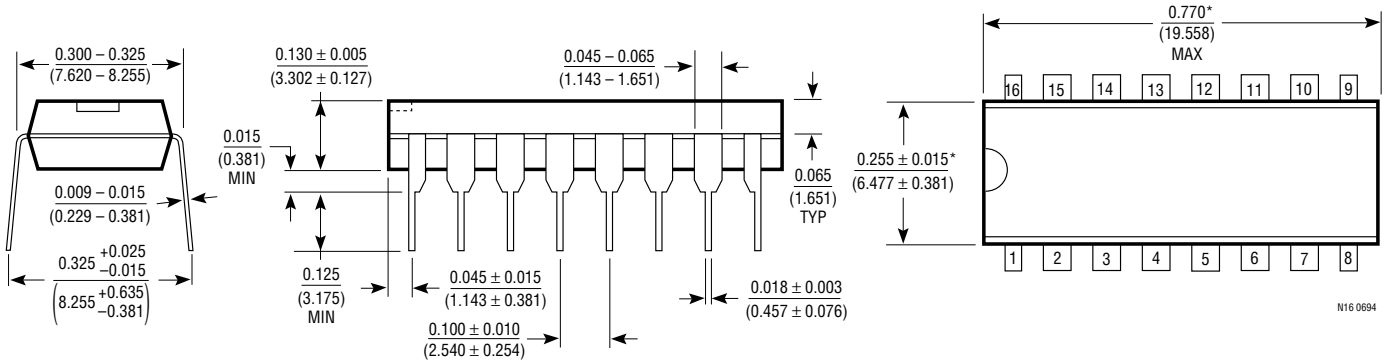

*THESE DIMENSIONS DO NOT INCLUDE MOLD FLASH OR PROTRUSIONS.
MOLD FLASH OR PROTURSIONS SHALL NOT EXCEED 0.010 INCH (0.254mm).

S Package
16-Lead Plastic SOL

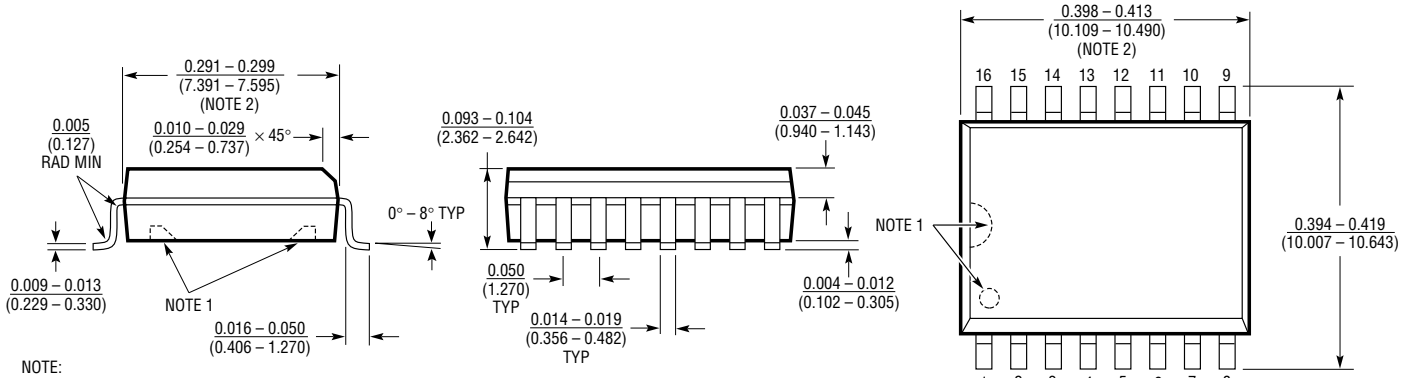

NOTE:
1. PIN 1 IDENT, NOTCH ON TOP AND CAVITIES ON THE BOTTOM OF PACKAGES ARE THE MANUFACTURING OPTIONS. THE PART MAY BE SUPPLIED WITH OR WITHOUT ANY OF THE OPTIONS.
2. THESE DIMENSIONS DO NOT INCLUDE MOLD FLASH OR PROTRUSIONS. MOLD FLASH OR PROTRUSIONS SHALL NOT EXCEED 0.006 INCH (0.15mm).

RELATED PARTS

PART NUMBER	DESCRIPTION	COMMENTS
LTC1257	Complete Serial I/O V_{OUT} 12-Bit DAC	5V to 15V Single Supply in 8-Pin SO and PDIP
LTC1451/LTC1452/LTC1453	Complete Serial I/O V_{OUT} 12-Bit DACs	3V/5V Single Supply in 8-Pin SO and PDIP
LTC7541A	Parallel I/O Mulitplying 12-Bit DAC	12-Bit Wide Input
LTC8043	Serial Mulitplying 12-Bit DAC	8-Pin SO and PDIP

Linear Technology Corporation
1630 McCarthy Blvd., Milpitas, CA 95035-7487
(408) 432-1900 • FAX: (408) 434-0507 • TELEX: 499-3977
LT/GP 0695 10K • PRINTED IN USA
© LINEAR TECHNOLOGY CORPORATION 1995