BIL ED0-P060A-01-S75
BIL0003

BALLUFF
sensors worldwide

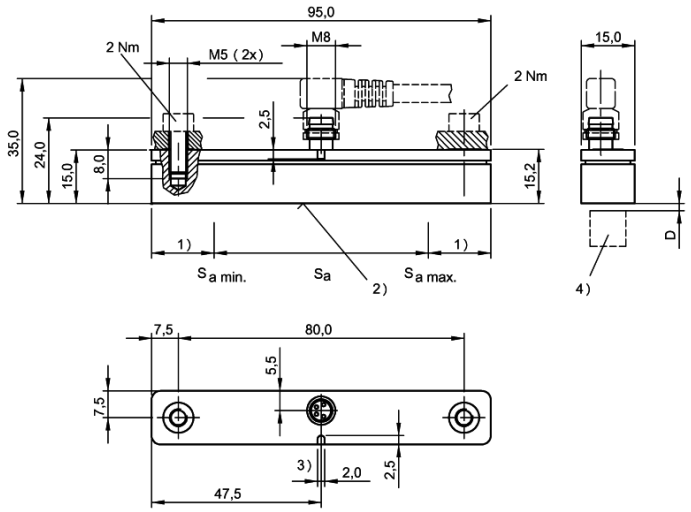

L

Electrical data:

Connection	Connector
Rated operational voltage DC	24 V
Rated supply frequency	DC
Rated insulation voltage (Ui)	75 DC
Electrical type	DC
Ripple of power supply	10 %
Supply voltage max DC (UB)	30 V
Supply voltage min DC (UB)	15 V
Output voltage se	5 V
Output voltage sl max	10 V
Output voltage sl min	0 V
Output current se	12 mA
Output current sl max	20 mA
Output current sl min	4 mA
Limit frequency - 3dB	1500 Hz
Load resistance max (Rl)	500 (Ia) Ohm
Load resistance min (Rl)	2000 (Ua) Ohm
No-load supply current I0 / Ue	30 mA

General data:

Short circuit protected	yes
Degree of protection IP	IP67
Polarity reversal resistant	yes
Protected against reversal	yes
Approval	CE, cULus

Mechanical data:

Ambient temperature max	75 °C
Ambient temperature min	-10 °C
Housing material	PA mod.
Working area max (sa)	60 mm
Working area min (sa)	0 mm
Effective range (se)	30 mm
Linear span max (sl)	55 mm
Linear span min (sl)	5 mm
Opt. working temperature max.	50
Opt. working temperature min.	10
Temp. drift of full scale	±2 %
Temperature coefficient max.	-25 µm/K
Temperature coefficient min.	15 µm/K
Temperature coefficient type	-5 µm/K
Repeat accuracy acc. to BWN	±60 µM
Repeat accuracy of full scale	0,1 %
linearity error	±2,4 mm

Wiring:

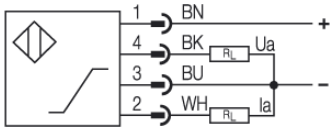

Pinout:
Pinout