DASH NO	CABLES ACCOMMODATED	A DIM	B DIM	C FLATS	D FLATS	E DIA	ASSEMBLE PER
-7	TRC-50-2 TRC-75-2	1.135	.096	.438	.438	.500	TAI-189
-8	8227, BELDEN	1.716	.130	.625	.688	.750	TAI-103
-9	TWC-78-2 TWC-124-2	1.135	.096	.438	.438	.500	TAI-102
-A9	BL782, TIMES BL982, TIMES BL1242, TIMES			4	4		
-10	RG-22 754E, AT&T	1.716	.130	.625	.688	.750	TAI-103
-11	760A, AT&T						
-12	16 PEVL, AT&T V1-AL, GENERAL						TAI-128
-13	TRF-59, TIMES						TAI-129
-13A	8232, BELDEN						TAI-165
-14	8233, BELDEN						TAI-129
-23	250-3884, MICRODOT	1.135	.096	.438	.438	.500	TAI-189
-24	202-3934, MICRODOT						TAI-102
-24A	9530A5117, RAYCHEM						TAI-189
-25	T-43M, GENERAL						TAI-102
-25A	5021H5331, RAYCHEM						TAI-189
-26	7028A5518, RAYCHEM						
-27	T19TPSJ2619EN, WOVEN 202-3927, MICRODOT 202-3942, MICRODOT						TAI-102
-29	TWC-78-1/TWC-124-1A						
-30	761A, AT&T 8441, BELDEN						
-32	TRC-50-1						TAI-189
-33	TRC-75-1						
-42	21-204, ESSEX 4463, CONSOLIDATED						
-43	250-4044/250-4045 293-3930, MICRODOT						
-45	M27500-22TE2T14 1100-66F, STANDARD						TAI-102
-46	9860, BELDEN	1.716	.130	.625	.688	.750	TAI-103
-47	M17/176-00002	1.135	.096	.438	.438	.500	TAI-102
-49	TWAC-78-1F2						
-54	89207, BELDEN	1.716	.130	.625	.688	.750	
-55	89272, BELDEN	1.135	.096	.438	.438	.500	
-56	GC875GC1, GRUMMAN						TAI-189
-57	GC875GB1, GRUMMAN						
-58	GC875TM24H, GRUMMAN						TAI-102
-59	GC875LN1, GRUMMAN						TAI-189
-60	M17/177, THERMATICS 380-10045, BOEING						
-64	7528A5314, RAYCHEM						

6. EXAMPLE OF A COMPLETE MODEL NO.

PL74 -47 5

BASIC MODEL NO. — DASH NO.

5 IF BEND RELIEF SPRING REQD (SEE FIG 1)
ADD SUFFIX "BR" TO MODEL NO
(NOT AVAILABLE WITH CABLE GROUPS -8, -10, -11, -12, -13, -13A, -14, -46 & -54)

4 CLAMP NUT OMITTED

3 2-LUG BAYONET CONCENTRIC TWINAX/TRIAX TRB CABLE PLUG

2. FINISH: TFS-1A (NICKEL)

1. ALL DIM ARE IN INCHES

DATA CONTAINED IN THIS DOCUMENT IS PROPRIETARY TO TROMPETER ELECTRONICS INC. AND SHALL NOT BE DISCLOSED, COPIED OR USED FOR PROCUREMENT OR MANUFACTURE WITHOUT EXPRESS WRITTEN PERMISSION OF TROMPETER ELECTRONICS INC.

REVISIONS		310-0025	SH 1
REV	DESCRIPTION	DATE	APPROVED
U	REVISED PER ECO 14778	11-5-02	[illegible]

FIG 1 5
-9 SHOWN

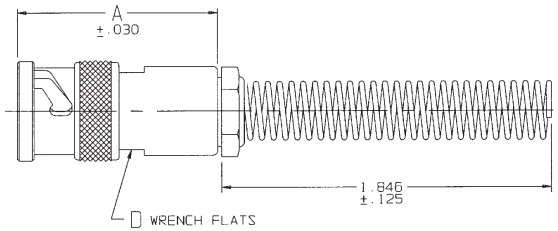

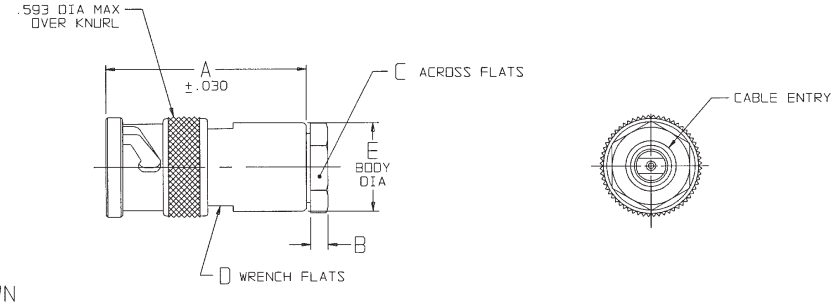

FIG 2
-9 SHOWN

CABLE ENTRY			
DASH NO	DIA	DASH NO	DIA
-7	.274	-29	.191
-8	.345	-30	.235
-9	.285	-32	.191
-A9		-33	.217
-10	.455	-42	.300
-11	.347	-43	.200
-12	.485	-45	.183
-13	.362	-46	.475
-13A	.352	-47	.164
-14	.490	-49	.132
-23	.183	-54	.323
-24	.191	-55	.250
-24A	.200	-56	.191
-25	.285	-57	
-25A		-58	.198
-26	.191	-59	
-27	.145	-60	.217
		-64	.183

RED INDICATES ORIGINAL

TYPE 3	DASH NO/CABLE GROUP																
TWINAX	-8	-9	-A9	-10	-11	-12	-24	-25	-27	-29	-30	-45	-46	-47	-49	-54	-55
TRIAX	-7	-13	-13A	-14	-23	-24A	-25A	-26	-32	-33	-42	-43	-56	-57	-59	-60	-64
QUADRAX	-58																

INTERPRET DRAWING PER MIL-STD-100
DIMENSIONS ARE IN INCHES AND INCLUDE FINISH THICKNESS UNLESS OTHERWISE SPECIFIED

DRAWN AAH 11-4-02
CHECKED 11-4-02
QUALITY 11-5-02
MANUF. 11/5/02
APPROVED 11/4/02

305-0515
NEXT ASSY

CAD FILE NO. 310-0025U

TOL.: UNLESS SPECIFIED
.XX
.XXX ±.005
.XXXX
ANGLES

MATERIAL:

FINISH:

DO NOT SCALE DWG

TROMPETER ELECTRONICS, INC.

TITLE: PL74/PL74BR

SIZE	CAGE CODE	DRAWING NO.	REV.
B	14949	310-0025	U

SCALE NONE | DATE: 3/27/78 | SHEET 1C