PART NAME	INTERNAL CHASSIS	PART No.	C-14242 TO C-14245	REV. DATE	8-30-10

MATERIAL _____ 0.090 THK. ALUMINUM
FINISH _____ NATURAL

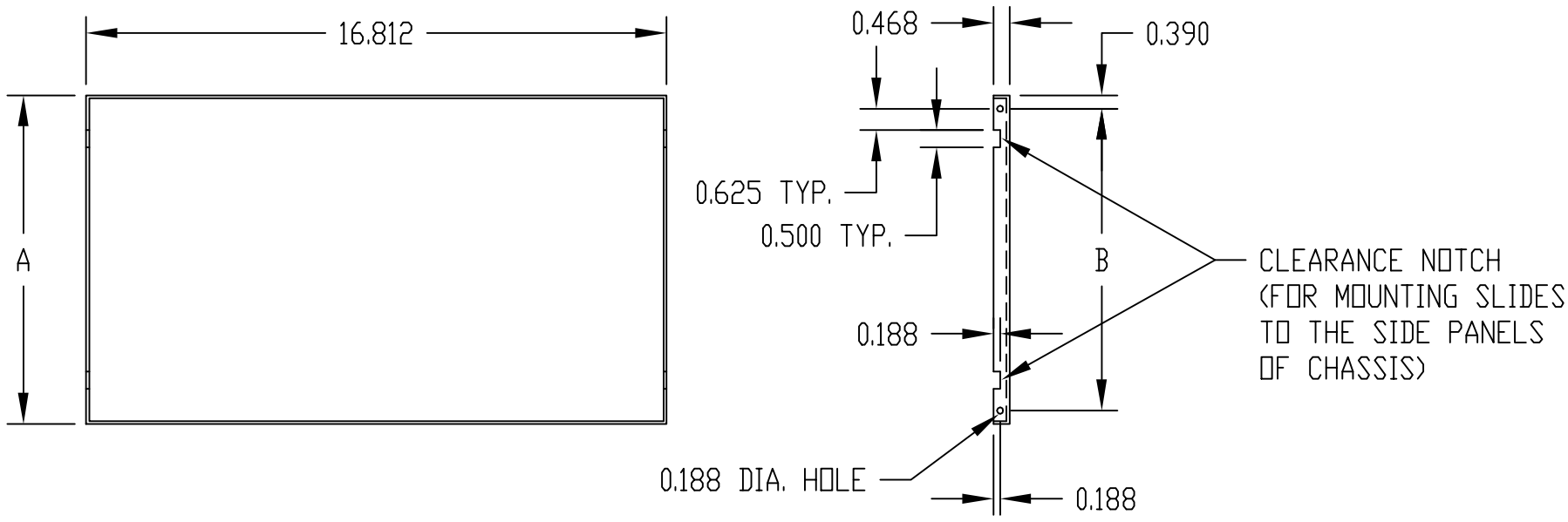

PART No.	DIMENSION A	DIMENSION B
C-14242	4.281	3.500
C-14243	6.031	5.250
C-14244	7.781	7.000
C-14245	9.531	8.750

PART NAME	TOP OR BOTTOM COVER	PART No.	TBC-14252 & TBC-14262 TBC-14253 & TBC-14263

MATERIAL _____ 0.050 THK. ALUMINUM
FINISH _____ NATURAL

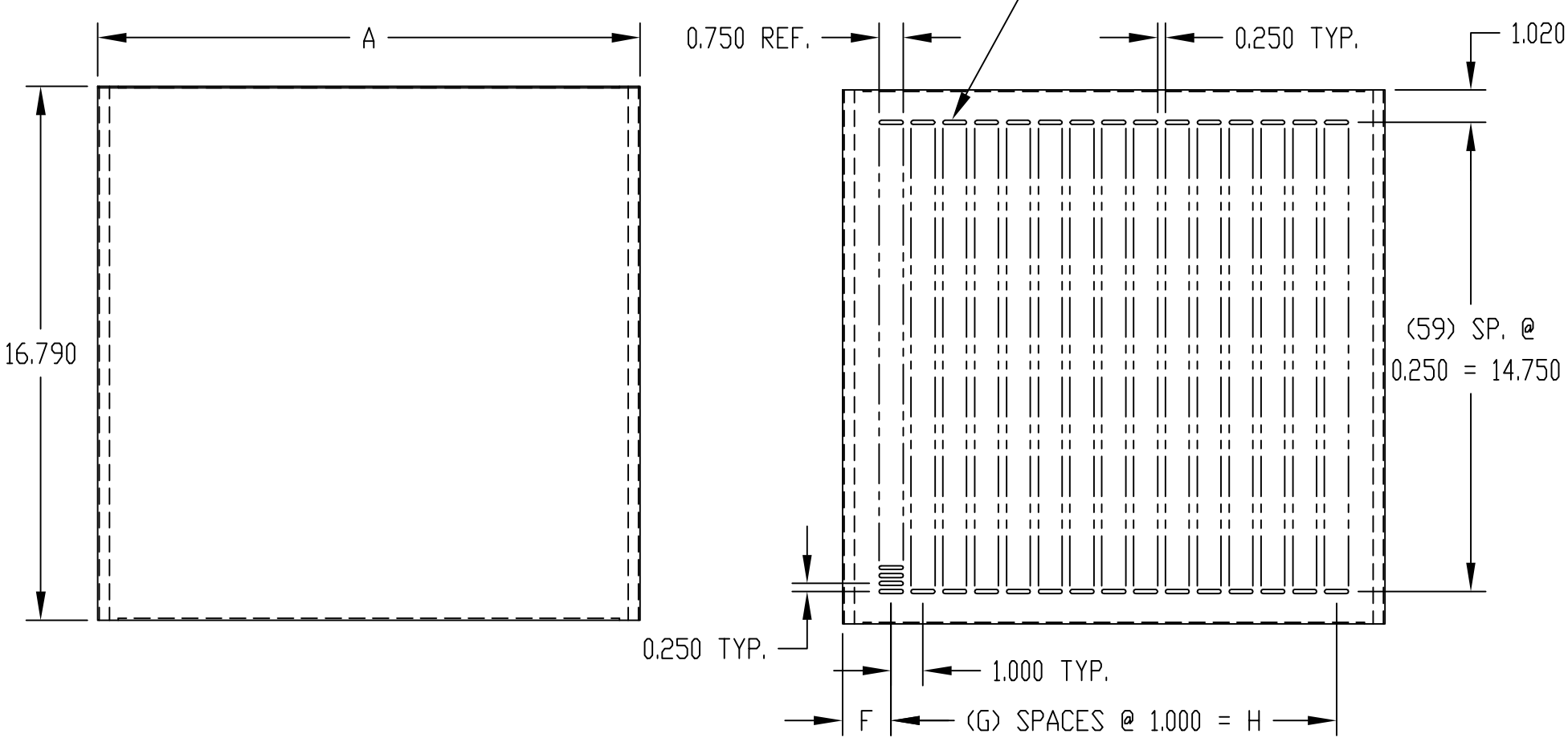

SOLID TOP OR BOTTOM COVER
TBC-14252 & TBC-14253

VENTILATED TOP OR BOTTOM COVER
TBC-14262 & TBC-14263

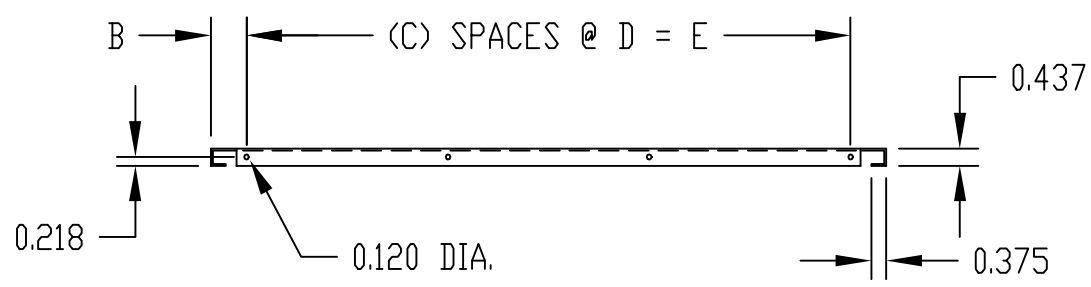

PART No.	DIM. A	DIM. B	QTY. C	DIM. D	DIM. E	DIM. F	QTY. G	DIM. H
TBC-14252	17.062	0.906	2	7.625	15.250	1.531	14	14.000
TBC-14253	21.875	1.000	3	6.625	19.875	1.937	18	18.000
TBC-14262	17.062	0.906	2	7.625	15.250	1.531	14	14.000
TBC-14263	21.875	1.000	3	6.625	19.875	1.937	18	18.000