ATS/ATS-SM Series

Quartz Crystal

FEATURES

- Standard HC-49/US [thru-hole] and HC-49/US-SM [surface mount] Packages
- Stable Frequency Over Temperature and Drive Level
- **Fundamental and 3rd Overtone Crystals**
- Frequency Range 3.2 – 64 MHz
- Frequency Tolerance, ±30 ppm Standard
- Frequency Stability, ±50 ppm Standard
- Operating Temperature, –20°C to +70°C Standard, -40°C to +85°C Available
- Tape & Reel Packaging Available
- **RoHS/Green Compliant [6/6]**

APPLICATIONS

The ATS/ATS-SM crystal series offers excellent long-term stability and reliability in a proven resistance-weld metal package. The excellent shock performance makes it suitable for microprocessor, telecommunication, industrial, consumer electronics and networking applications.

ORDERING INFORMATION

ATS

ATS □□□□ - □□□

PRODUCT OPTIONS
INS - Insulation Spacer

TEMPERATURE RANGE OPTIONS
Blank - Standard, -20°C to +70°C
E - Extended Temperature Range, -40°C to +85°C

PACKAGING OPTIONS
Blank - Bulk
1 - Radial Taping (Ammopak) *

FREQUENCY
Product Frequency/Load Code.
[3 to 4 digits]
Refer to Standard Product Part Numbers tables on Pages 2 and 3.

*** Standard packaging is bulk in a bag.**

ATS-SM

ATS □□□□ SM - □□

TEMPERATURE RANGE OPTIONS
Blank - Standard, -20°C to +70°C
E - Extended Temperature Range, -40°C to +85°C

PACKAGING OPTIONS
Blank - Bulk
1 - Tape and Reel **

FREQUENCY
Product Frequency/Load Code.
[3 to 4 digits]
Refer to Standard Product Part Numbers tables on Pages 2 and 3.

**** Standard packaging is tape and reel.**
CTS Distributors may use -T for tape and reel indicator.

Non-Standard Ordering Options

- Contact your local CTS Representative or CTS Inside Sales Representative for assistance.

STANDARD PRODUCT PART NUMBERS - ATS

Part numbers in **BOLD** are common stock items through CTS authorized distributors. Non-bold part numbers may be stocked or are available for order.

FREQUENCY (MHz)	PART NUMBER -20/70°C	PART NUMBER -40/85°C	LOAD CAPACITANCE	OPERATING MODE
3.579545	ATS036B	ATS036B-E	Series	Fundamental
3.579545	**ATS036**	ATS036-E	18 pF	Fundamental
3.686400	ATS037A	ATS037A-E	Series	Fundamental
3.686400	**ATS037**	ATS037-E	20 pF	Fundamental
3.686400	**ATS037B**	**ATS037B-E**	18 pF	Fundamental
4.000000	ATS04A	ATS04A-E	Series	Fundamental
4.000000	**ATS040**	ATS040-E	20 pF	Fundamental
4.000000	**ATS040B**	**ATS040B-E**	18 pF	Fundamental
4.096000	ATS042A	ATS042A-E	20 pF	Fundamental
4.096000	ATS042B	ATS042B-E	18 pF	Fundamental
4.194304	ATS041C	ATS041C-E	12 pF	Fundamental
4.915200	ATS049A	ATS049A-E	Series	Fundamental
4.915200	**ATS042**	ATS042-E	20 pF	Fundamental
4.915200	**ATS049B**	**ATS049B-E**	18 pF	Fundamental
5.000000	ATS050C	ATS050C-E	Series	Fundamental
5.000000	ATS050A	ATS050A-E	20 pF	Fundamental
5.000000	ATS050B	ATS050B-E	18 pF	Fundamental
5.068800	ATS051	ATS051-E	Series	Fundamental
5.068800	**ATS050**	ATS050-E	20 pF	Fundamental
6.000000	ATS060A	ATS060A-E	Series	Fundamental
6.000000	**ATS060**	ATS060-E	20 pF	Fundamental
6.000000	**ATS060B**	**ATS060B-E**	18 pF	Fundamental
6.000000	ATS060C	ATS060C-E	32 pF	Fundamental
6.144000	ATS061	ATS061-E	20 pF	Fundamental
6.144000	**ATS061B**	**ATS061B-E**	18 pF	Fundamental
6.144000	ATS061C	ATS061C-E	32 pF	Fundamental
7.372800	ATS073A	ATS073A-E	Series	Fundamental
7.372800	ATS073	ATS073-E	20 pF	Fundamental
7.372800	ATS073B	ATS073B-E	18 pF	Fundamental
7.500000	ATS075	ATS075-E	Series	Fundamental
7.500000	ATS075A	ATS075A-E	20 pF	Fundamental
7.500000	ATS075B	ATS075B-E	18 pF	Fundamental
8.000000	ATS080	ATS080-E	Series	Fundamental
8.000000	**ATS08A**	ATS08A-E	20 pF	Fundamental
8.000000	**ATS080B**	**ATS080B-E**	18 pF	Fundamental
8.000000	ATS080C	ATS080C-E	32 pF	Fundamental
8.192000	ATS081B	ATS081B-E	18 pF	Fundamental
9.830400	ATS099	ATS099-E	Series	Fundamental
9.830400	**ATS098**	ATS098-E	20 pF	Fundamental
9.830400	**ATS098B**	**ATS098B-E**	18 pF	Fundamental
10.000000	**ATS100**	ATS100-E	Series	Fundamental
10.000000	ATS10A	ATS10A-E	20 pF	Fundamental
10.000000	**ATS100B**	**ATS100B-E**	18 pF	Fundamental
11.059200	ATS111A	ATS111A-E	Series	Fundamental
11.059200	**ATS111**	ATS111-E	20 pF	Fundamental
11.059200	**ATS111B**	**ATS111B-E**	18 pF	Fundamental
11.059200	ATS111C	ATS111C-E	32 pF	Fundamental
12.000000	**ATS120**	ATS120-E	Series	Fundamental
12.000000	ATS12A	ATS12A-E	20 pF	Fundamental
12.000000	**ATS120B**	**ATS120B-E**	18 pF	Fundamental
12.000000	ATS120C	ATS120C-E	32 pF	Fundamental
12.288000	ATS125	ATS125-E	Series	Fundamental
12.288000	**ATS122**	ATS122-E	20 pF	Fundamental
12.288000	**ATS122B**	**ATS122B-E**	18 pF	Fundamental
12.296000	ATS124	ATS124-E	Series	Fundamental
12.296000	ATS123	ATS123-E	20 pF	Fundamental
12.296000	ATS123B	ATS123B-E	18 pF	Fundamental

FREQUENCY (MHz)	PART NUMBER -20/70°C	PART NUMBER -40/85°C	LOAD CAPACITANCE	OPERATING MODE
12.352000	ATS126	ATS126-E	Series	Fundamental
12.352000	ATS127	ATS127-E	20 pF	Fundamental
13.500000	ATS135	ATS135-E	20 pF	Fundamental
14.318180	**ATS143**	ATS143-E	Series	Fundamental
14.318180	ATS14A	ATS14A-E	20 pF	Fundamental
14.318180	**ATS143B**	**ATS143B-E**	18 pF	Fundamental
14.745600	ATS147	ATS147-E	Series	Fundamental
14.745600	**ATS147A**	**ATS147A-E**	20 pF	Fundamental
14.745600	**ATS147B**	**ATS147B-E**	18 pF	Fundamental
15.000000	ATS150	ATS150-E	Series	Fundamental
15.360000	**ATS15A**	ATS15A-E	20 pF	Fundamental
16.000000	**ATS160**	ATS160-E	Series	Fundamental
16.000000	**ATS16A**	ATS16A-E	20 pF	Fundamental
16.000000	ATS16B	ATS16B-E	18 pF	Fundamental
16.384000	ATS164B	ATS164B-E	18 pF	Fundamental
16.934400	ATS169	ATS169-E	20 pF	Fundamental
18.000000	ATS180A	ATS180A-E	20 pF	Fundamental
18.432000	ATS184	ATS184-E	Series	Fundamental
18.432000	ATS18A	ATS18A-E	20 pF	Fundamental
18.432000	ATS184B	ATS184B-E	18 pF	Fundamental
19.660800	ATS196	ATS196-E	Series	Fundamental
19.660800	ATS19A	ATS19A-E	20 pF	Fundamental
19.660800	ATS196B	ATS196B-E	18 pF	Fundamental
20.000000	**ATS200**	ATS200-E	Series	Fundamental
20.000000	ATS20A	ATS20A-E	20 pF	Fundamental
20.000000	**ATS200C**	**ATS200C-E**	18 pF	Fundamental
20.000000	ATS20B	ATS20B-E	50 pF	Fundamental
20.480000	**ATS204**	ATS204-E	20 pF	Fundamental
22.118400	ATS22A	ATS22A-E	20 pF	Fundamental
22.118400	ATS221B	ATS221B-E	18 pF	Fundamental
24.000000	ATS240	ATS240-E	Series	Fundamental
24.000000	ATS24A	ATS24A-E	20 pF	Fundamental
24.000000	ATS240B	ATS240B-E	18 pF	Fundamental
24.000000	ATS240C	ATS240C-E	12 pF	Fundamental
24.576000	**ATS245**	ATS245-E	Series	Fundamental
24.576000	ATS24B	ATS24B-E	20 pF	Fundamental
24.576000	**ATS245A**	**ATS245A-E**	18 pF	Fundamental
25.000000	**ATS250**	ATS250-E	Series	Fundamental
25.000000	**ATS25A**	ATS25A-E	20 pF	Fundamental
25.000000	**ATS250B**	**ATS250B-E**	18 pF	Fundamental
27.000000	ATS270A	ATS270A-E	20 pF	Fundamental
27.000000	ATS270B	ATS270B-E	18 pF	Fundamental
32.000000	ATS320	ATS320-E	Series	3rd Overtone
32.000000	ATS32A	ATS32A-E	20 pF	3rd Overtone
32.000000	ATS320B	ATS320B-E	18 pF	3rd Overtone
40.000000	ATS400	ATS400-E	Series	3rd Overtone
40.000000	ATS40A	ATS40A-E	20 pF	3rd Overtone
40.000000	ATS400B	ATS400B-E	18 pF	3rd Overtone
48.000000	ATS480A	ATS480A-E	20 pF	3rd Overtone
48.000000	ATS480B	ATS480B-E	18 pF	3rd Overtone
60.000000	ATS600A	ATS600A-E	20 pF	3rd Overtone
60.000000	ATS600B	ATS600B-E	18 pF	3rd Overtone
64.000000	ATS640A	ATS640A-E	20 pF	3rd Overtone
64.000000	ATS640B	ATS640B-E	18 pF	3rd Overtone

STANDARD PRODUCT PART NUMBERS - ATS-SM

Part numbers in **BOLD** are common stock items through CTS authorized distributors. Non-bold part numbers may be stocked or are available for order.

FREQUENCY (MHz)	PART NUMBER -20/70°C	PART NUMBER -40/85°C	LOAD CAPACITANCE	OPERATING MODE
3.579545	ATS036BSM-1	ATS036BSM-1E	Series	Fundamental
3.579545	**ATS036SM-1**	ATS036SM-1E	18 pF	Fundamental
3.686400	ATS037ASM-1	ATS037ASM-1E	Series	Fundamental
3.686400	**ATS037SM-1**	ATS037SM-1E	20 pF	Fundamental
3.686400	**ATS037BSM-1**	ATS037BSM-1E	18 pF	Fundamental
4.000000	ATS04ASM-1	ATS04ASM-1E	Series	Fundamental
4.000000	**ATS040SM-1**	ATS040SM-1E	20 pF	Fundamental
4.000000	**ATS040BSM-1**	ATS040BSM-1E	18 pF	Fundamental
4.096000	ATS042ASM-1	ATS042ASM-1E	20 pF	Fundamental
4.096000	ATS042BSM-1	ATS042BSM-1E	18 pF	Fundamental
4.194304	ATS041BSM-1	ATS041BSM-1E	18 pF	Fundamental
4.194304	ATS041CSM-1	ATS041CSM-1E	12 pF	Fundamental
4.915200	ATS049ASM-1	ATS049ASM-1E	Series	Fundamental
4.915200	**ATS042SM-1**	ATS042SM-1E	20 pF	Fundamental
4.915200	**ATS049BSM-1**	ATS049BSM-1E	18 pF	Fundamental
5.000000	ATS050CSM-1	ATS050CSM-1E	Series	Fundamental
5.000000	ATS050ASM-1	ATS050ASM-1E	20 pF	Fundamental
5.000000	**ATS050BSM-1**	ATS050BSM-1E	18 pF	Fundamental
5.068800	ATS051SM-1	ATS051SM-1E	Series	Fundamental
5.068800	**ATS050SM-1**	ATS050SM-1E	20 pF	Fundamental
6.000000	ATS060ASM-1	ATS060ASM-1E	Series	Fundamental
6.000000	**ATS060SM-1**	ATS060SM-1E	20 pF	Fundamental
6.000000	**ATS060BSM-1**	ATS060BSM-1E	18 pF	Fundamental
6.000000	ATS060CSM-1	ATS060CSM-1E	32 pF	Fundamental
6.144000	ATS061SM-1	ATS061SM-1E	20 pF	Fundamental
6.144000	**ATS061BSM-1**	ATS061BSM--1E	18 pF	Fundamental
6.144000	ATS061CSM-1	ATS061CSM-1E	32 pF	Fundamental
7.372800	ATS073ASM-1	ATS073ASM-1E	Series	Fundamental
7.372800	ATS073SM-1	ATS073SM-1E	20 pF	Fundamental
7.372800	ATS073BSM-1	ATS073BSM-1E	18 pF	Fundamental
8.000000	ATS080SM-1	ATS080SM-1E	Series	Fundamental
8.000000	**ATS08ASM-1**	ATS08ASM-1E	20 pF	Fundamental
8.000000	**ATS080BSM-1**	ATS080BSM-1E	18 pF	Fundamental
8.000000	ATS080CSM-1	ATS080CSM-1E	32 pF	Fundamental
8.192000	ATS081BSM-1	ATS081BSM-1E	18 pF	Fundamental
9.830400	ATS099SM-1	ATS099SM-1E	Series	Fundamental
9.830400	**ATS098SM-1**	ATS098SM-1E	20 pF	Fundamental
9.830400	**ATS098BSM-1**	ATS098BSM-1E	18 pF	Fundamental
10.000000	**ATS100SM-1**	ATS100SM-1E	Series	Fundamental
10.000000	**ATS10ASM-1**	ATS10ASM-1E	20 pF	Fundamental
10.000000	**ATS100BSM-1**	ATS100BSM-1E	18 pF	Fundamental
11.059200	ATS111ASM-1	ATS111ASM-1E	Series	Fundamental
11.059200	**ATS111SM-1**	ATS111SM-1E	20 pF	Fundamental
11.059200	**ATS111BSM-1**	ATS111BSM-1E	18 pF	Fundamental
11.059200	ATS111CSM-1	ATS111CSM-1E	32 pF	Fundamental
12.000000	**ATS120SM-1**	ATS120SM-1E	Series	Fundamental
12.000000	ATS12ASM-1	ATS12ASM-1E	20 pF	Fundamental
12.000000	**ATS120BSM-1**	ATS120BSM-1E	18 pF	Fundamental
12.000000	ATS120CSM-1	ATS120CSM-1E	32 pF	Fundamental
12.288000	ATS125SM-1	ATS125SM-1E	Series	Fundamental
12.288000	**ATS122SM-1**	ATS122SM-1E	20 pF	Fundamental
12.288000	**ATS122BSM-1**	ATS122BSM-1E	18 pF	Fundamental
12.296000	ATS123SM-1	ATS123SM-1E	Series	Fundamental
12.296000	ATS124SM-1	ATS124SM-1E	20 pF	Fundamental
12.352000	ATS127SM-1	ATS127SM-1E	Series	Fundamental
12.352000	ATS126SM-1	ATS126SM-1E	20 pF	Fundamental
12.500000	ATS125BSM-1	ATS125BSM-1E	18 pF	Fundamental
13.000000	ATS130SM-1	ATS130SM-1E	20 pF	Fundamental
13.500000	ATS135SM-1	ATS135SM-1E	20 pF	Fundamental
13.500000	ATS135BSM-1	ATS135BSM-1E	18 pF	Fundamental
14.000000	ATS140BSM-1	ATS140BSM-1E	18 pF	Fundamental

FREQUENCY (MHz)	PART NUMBER -20/70°C	PART NUMBER -40/85°C	LOAD CAPACITANCE	OPERATING MODE
14.318180	**ATS143SM-1**	ATS143SM-1E	Series	Fundamental
14.318180	ATS14ASM-1	ATS14ASM-1E	20 pF	Fundamental
14.318180	**ATS143BSM-1**	ATS143BSM-1E	18 pF	Fundamental
14.745600	ATS147SM-1	ATS147SM-1E	Series	Fundamental
14.745600	**ATS147ASM-1**	ATS147ASM-1E	20 pF	Fundamental
14.745600	**ATS147BSM-1**	ATS147BSM-1E	18 pF	Fundamental
15.000000	ATS150SM-1	ATS150SM-1E	Series	Fundamental
15.000000	ATS150BSM-1	ATS150BSM-1E	18 pF	Fundamental
15.360000	**ATS15ASM-1**	ATS15ASM-1E	20 pF	Fundamental
16.000000	**ATS160SM-1**	ATS160SM-1E	Series	Fundamental
16.000000	ATS16ASM-1	ATS16ASM-1E	20 pF	Fundamental
16.000000	ATS16BSM-1	ATS16BSM-1E	18 pF	Fundamental
16.384000	ATS164BSM-1	ATS164BSM-1E	18 pF	Fundamental
16.934400	ATS169SM-1	ATS169SM-1E	20 pF	Fundamental
18.432000	ATS184SM-1	ATS184SM-1E	Series	Fundamental
18.432000	ATS18ASM-1	ATS18ASM-1E	20 pF	Fundamental
18.432000	ATS184BSM-1	ATS184BSM-1E	18 pF	Fundamental
19.660800	ATS196SM-1	ATS196SM-1E	Series	Fundamental
19.660800	ATS19ASM-1	ATS19ASM-1E	20 pF	Fundamental
19.660800	ATS196BSM-1	ATS196BSM-1E	18 pF	Fundamental
20.000000	**ATS200SM-1**	ATS200SM-1E	Series	Fundamental
20.000000	ATS20ASM-1	ATS20ASM-1E	20 pF	Fundamental
20.000000	**ATS200CSM-1**	ATS200CSM-1E	18 pF	Fundamental
20.000000	ATS20BSM-1	ATS20BSM-1E	50 pF	Fundamental
20.480000	**ATS204SM-1**	ATS204SM-1E	20 pF	Fundamental
22.118400	ATS22ASM-1	ATS22ASM-1E	20 pF	Fundamental
22.118400	ATS221BSM-1	ATS221BSM-1E	18 pF	Fundamental
22.579200	ATS225BSM-1	ATS225BSM-1E	18 pF	Fundamental
24.000000	ATS240SM-1	ATS240SM-1E	Series	Fundamental
24.000000	ATS24ASM-1	ATS24ASM-1E	20 pF	Fundamental
24.000000	ATS240BSM-1	ATS240BSM-1E	18 pF	Fundamental
24.000000	ATS240CSM-1	ATS240CSM-1E	12 pF	Fundamental
24.576000	**ATS245SM-1**	ATS245SM-1E	Series	Fundamental
24.576000	ATS24BSM-1	ATS24BSM-1E	20 pF	Fundamental
24.576000	**ATS245ASM-1**	ATS245ASM-1E	18 pF	Fundamental
25.000000	ATS250SM-1	ATS250SM-1E	Series	Fundamental
25.000000	ATS25ASM-1	ATS25ASM-1E	20 pF	Fundamental
25.000000	ATS250BSM-1	ATS250BSM-1E	18 pF	Fundamental
26.000000	ATS260ASM-1	ATS260ASM-1E	20 pF	Fundamental
26.000000	ATS260BSM-1	ATS260BSM-1E	18 pF	Fundamental
27.000000	ATS270ASM-1	ATS270ASM-1E	20 pF	Fundamental
27.000000	ATS270BSM-1	ATS270BSM-1E	18 pF	Fundamental
28.636360	ATS286ASM-1	ATS286ASM-1E	20 pF	Fundamental
30.000000	ATS300ASM-1	ATS300ASM-1E	20 pF	Fundamental
30.000000	ATS300BSM-1	ATS300BSM-1E	18 pF	Fundamental
32.000000	ATS320SM-1	ATS320SM-1E	Series	3rd Overtone
32.000000	ATS32ASM-1	ATS32ASM-1E	20 pF	3rd Overtone
32.000000	ATS320BSM-1	ATS320BSM-1E	18 pF	3rd Overtone
33.000000	ATS330ASM-1	ATS330ASM-1E	20 pF	3rd Overtone
33.000000	ATS330BSM-1	ATS330BSM-1E	18 pF	3rd Overtone
36.000000	ATS360ASM-1	ATS360ASM-1E	20 pF	3rd Overtone
36.000000	ATS360BSM-1	ATS360BSM-1E	18 pF	3rd Overtone
40.000000	ATS400SM-1	ATS400SM-1E	Series	3rd Overtone
40.000000	ATS40ASM-1	ATS40ASM-1E	20 pF	3rd Overtone
40.000000	ATS400BSM-1	ATS400BSM-1E	18 pF	3rd Overtone
48.000000	ATS480ASM-1	ATS480ASM-1E	20 pF	3rd Overtone
48.000000	ATS480BSM-1	ATS480BSM-1E	18 pF	3rd Overtone
60.000000	ATS600ASM-1	ATS600ASM-1E	20 pF	3rd Overtone
60.000000	ATS600BSM-1	ATS600BSM-1E	18 pF	3rd Overtone
64.000000	ATS640ASM-1	ATS640ASM-1E	20 pF	3rd Overtone
64.000000	ATS640BSM-1	ATS640BSM-1E	18 pF	3rd Overtone

ELECTRICAL CHARACTERISTICS

	PARAMETER	VALUE
ELECTRICAL PARAMETERS	Frequency Range	3.2 MHz to 64.0 MHz
	Operating Mode	Fundamental or 3rd Overtone
	Crystal Cut	AT-Cut
	Frequency Tolerance @ +25°C	± 30 ppm Standard *
	Frequency Stability Tolerance (Operating Temperature Range, Referenced to 25°C Reading)	± 50 ppm Standard *
	Operating Temperature Range	-20°C to +70°C * -40°C to +85°C Available, See Ordering Information
	Equivalent Series Resistance	See ESR Table
	Load Capacitance or Resonance Mode	See Standard Part Numbers tables *
	Shunt Capacitance (C_0)	7.0 pF Maximum
	Drive Level	100 µW Typical, 1,000 µW Maximum
	Aging @ +25°C	±3 ppm/yr Typical, ±5 ppm/yr Maximum
	Insulation Resistance	500 Ohms @ DC 100V
	Storage Temperature Range	-40°C to +85°C
	Reflow Condition, per JEDEC J-STD-020	+260°C Maximum, 10 Seconds Maximum

* Custom requirements may be available upon request.

EQUIVALENT SERIES RESISTANCE TABLE

FREQUENCY RANGE	OSCILLATION MODE	ESR MAXIMUM
3.20 MHz - < 4.00 MHz	Fundamental	150 Ohms
4.00 MHz - < 5.00 MHz	Fundamental	120 Ohms
5.00 MHz - < 8.00 MHz	Fundamental	80 Ohms
8.00 MHz - < 12.00 MHz	Fundamental	60 Ohms
12.00 MHz - < 20.00 MHz	Fundamental	40 Ohms
20.00 MHz - < 30.00 MHz	Fundamental	30 Ohms
27.00 MHz - 64.00 MHz	3rd Overtone	80 Ohms

ATS PACKAGE DRAWING

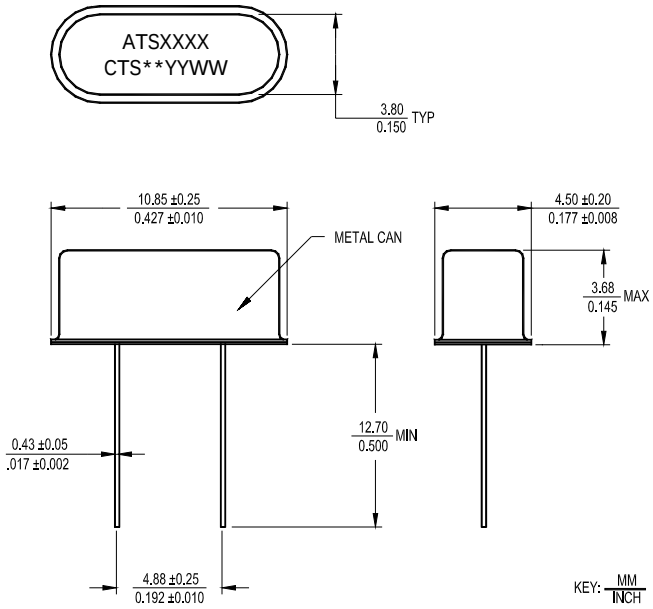

MARKING INFORMATION

1. ATSXXXX - CTS Part Number.
   a) The package code "1" is not required in the marking.
   b) The –E is required in the marking for extended temperature range parts.
   [See Standard Product Part Numbers tables.]
2. ** - Manufacturing Site Code.
3. YYWW – Date Code, YY – year, WW – week.
4. Complete CTS part number, frequency value and date code information must appear on bag and box labels.

NOTES

1. Lead finish (e1), SnAgCu.
2. MSL = 1.

ATS-SM PACKAGE DRAWING

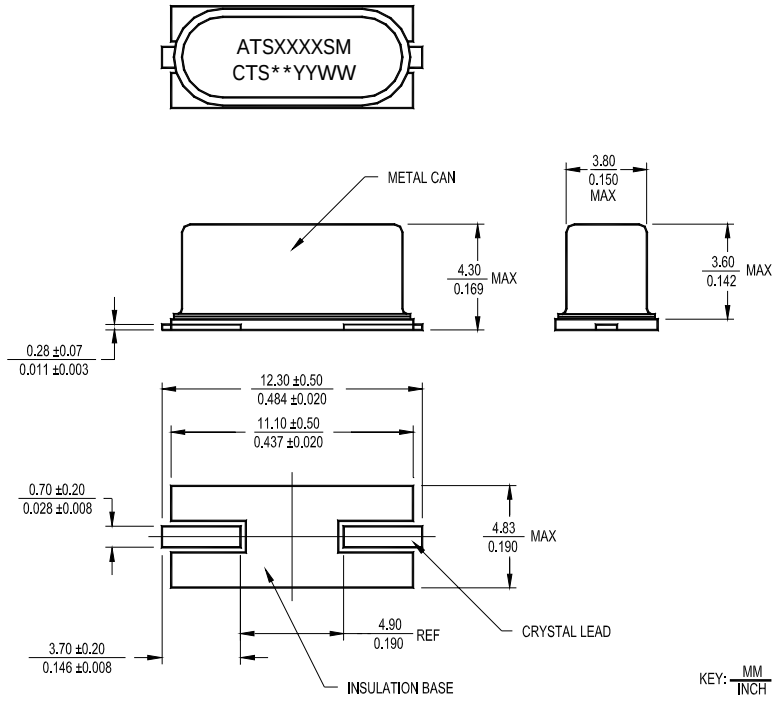

MARKING INFORMATION

1. ATSXXXXXSM - CTS Part Number.
   a) The package code "1" is not required in the marking.
   b) The –E is required in the marking for extended temperature range parts.
   [See Standard Product Part Numbers tables.]
2. ** - Manufacturing Site Code.
3. YYWW – Date Code, YY – year, WW – week.
4. Complete CTS part number, frequency value and date code information must appear on bag and box labels.

NOTES

1. Lead finish (e1), SnAgCu.
2. MSL = 1.

SUGGESTED SOLDER PAD GEOMETRY

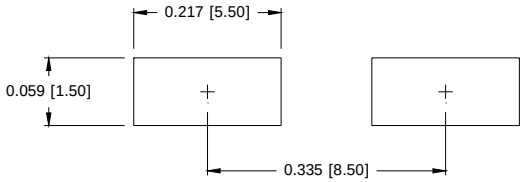

PACKAGING INFORMATION

ATS Radial Taping (Ammopak)

DIMENSIONS IN MILLIMETERS

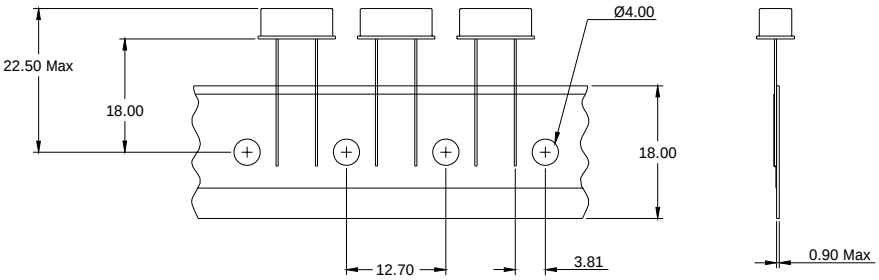

ATS-SM Tape and Reel
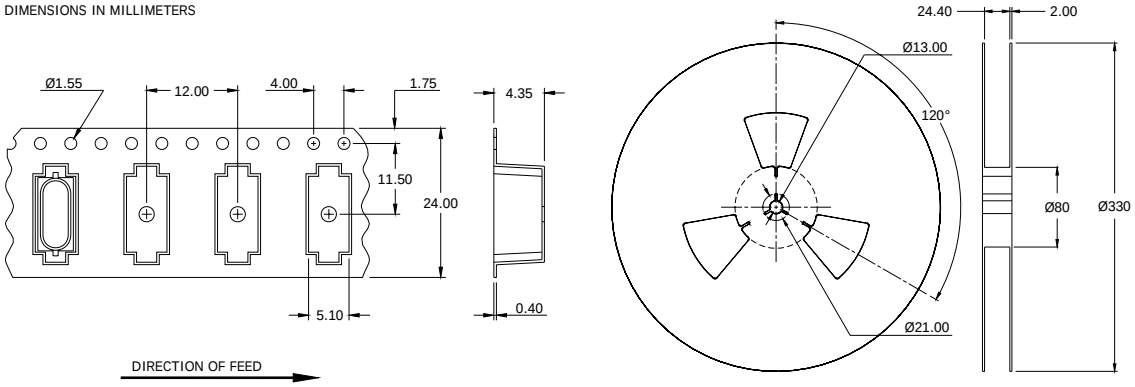
DIMENSIONS IN MILLIMETERS