Model CB3 & CB3LV

HCMOS/TTL Clock Oscillator

Part Dimensions:
7.0 × 5.0 × 1.8mm • 171.497mg

Features

- Ceramic Surface Mount Package
- Fundamental and 3rd Overtone Crystal Designs
- Frequency Range 1.0 – 200MHz *
- +3.3V and +5.0V Operation
- Operating Temperature Range to -40°C to +85°C
- Output Enable Standard
- Tape and Reel Packaging, EIA-418

Standard Frequencies

* See Page 6 for common frequencies.
Check with factory for availability of frequencies not listed.

Applications

- Internet of Things [IoT, IIoT]
- Microcontrollers and FPGAs
- Wireless Communication
- Networking Equipment
- Data Communications
- Computers and Peripherals
- Ethernet/GbE/SyncE
- Portable Devices
- Test and Measurement

Description

CTS Model CB3 and CB3LV are low cost, low voltage clock oscillators supporting HCMOS output. Employing the latest IC technology, CB3/CB3LV have excellent stability and low phase jitter performance.

Ordering Information

Model	Supply Voltage		Frequency Stability		Temperature Range		Frequency Code [MHz]
CB3	LV	-	3		C	-	XXXMXXXXXX

Code	Voltage
LV	+3.3Vdc
Blank	+5.0Vdc

Code	Temp. Range
C	-20°C to +70°C
I	-40°C to +85°C

Code	Stability
6	±20ppm [1]
5	±25ppm
7	±32ppm [2]
3	±50ppm
2	±100ppm [2]

Code	Frequency
	Product Frequency Code [3]

Notes:

1] Consult factory for availability of 6I Stability/Temperature combination.
2] These stabilities are not recommended for new designs.
3] Frequency is recorded with 1, 2 or 3 leading significant digits before and 6 significant digits [including zeroes] after the "M".
[Ex. 3.579545MHz = 3M57954, 14.31818MHz = 14M318180, 25MHz = 25M000000, 125MHz = 125M000000]
[Ex. part numbers - CB3LV-3C-25M000000, CB3-3C-14M318180]
4] CTS Distributors may add a -T or -1 at the end of the part number to indicate Tape and Reel packaging.

Not all performance combinations and frequencies may be available.
Contact your local CTS Representative or CTS Customer Service for availability.

This product is specified for use only in standard commercial applications. Supplier disclaims all express and implied warranties and liability in connection with any use of this product in any non-commercial applications or in any application that may expose the product to conditions that are outside of the tolerances provided in its specification.

©2017 CTS® Corporation. Information/product(s) subject to change. No warranty that product(s) will meet the stated specifications for customer specific applications or test equipment. Visit www.ctscorp.com for list of applicable patent(s), more information, or to request a quote.

Electrical Specifications

Operating Conditions

PARAMETER	SYMBOL	CONDITIONS	MIN	TYP	MAX	UNIT
Maximum Supply Voltage	V_{CC}	-	-0.5	-	7.0	V
Supply Voltage	V_{CC}	±10%	2.97 4.50	3.3 5.0	3.63 5.50	V
Supply Current		Frequency Range @ Tested load for typical values				
CB3	I_{CC}	1.0MHz to 20MHz @ C_L = 30pF	-	10	25	mA
		20.001MHz to 80MHz @ C_L = 30pF	-	30	50	
		80.001MHz to 107MHz @ C_L = 15pF	-	40	70	
CB3LV		1.0MHz to 20MHz @ CL = 15pF	-	7	12	
		20.001MHz to 80MHz @ CL = 15pF	-	20	35	
		80.001MHz to 200MHz @ CL = 15pF	-	30	60	
Output Load	C_L	1.0MHz to 50MHz	-	30	50	pF
		50.001MHz to 80MHz	-	15	30	
		80.001MHz to 200MHz	-	-	15	
Operating Temperature	T_A	-	-20 -40	+25	+70 +85	°C
Storage Temperature	T_{STG}	-	-55	-	+125	°C

Frequency Stability

PARAMETER	SYMBOL	CONDITIONS	MIN	TYP	MAX	UNIT
Frequency Range	f_O	CB3		1.0 - 107		MHz
		CB3LV		1.0 - 200		
Frequency Stability [Note 1]	$\Delta f/f_O$	-		20, 25 or 50		±ppm
Aging	$\Delta f/f_{25}$	First Year @ +25°C, nominal V_{CC}	-5	±3	5	ppm

1.] Inclusive of initial tolerance at time of shipment, changes in supply voltage, load, temperature and 1st year aging.

Output Parameters

PARAMETER	SYMBOL	CONDITIONS	MIN	TYP	MAX	UNIT
Output Type	-	-		HCMOS		-
Output Voltage Levels	V_{OH}	Logic '1' Level, CMOS Load	$0.9V_{CC}$	-	-	V
		Logic '1' Level, TTL Load	V_{CC} - 0.6V	-	-	
	V_{OL}	Logic '0' Level, CMOS Load	-	-	$0.1V_{CC}$	
		Logic '0' Level, TTL Load	-	-	0.4	
Output Current Levels	I_{OH}	V_{OH} = +2.2V/+3.9V V_{CC} = +3.0V/+4.5V	-	-	-8, -16	mA
	I_{OL}	V_{OL} = 0.4V V_{CC} = +3.0V, +4.5V	-	-	+8, +16	
Output Duty Cycle	SYM	@ 50% Level	45	-	55	%
Rise and Fall Time [Note 2]		@ 10%/90% Levels, Frequency Range @ Tested load for typical values				
CB3	T_R, T_F	1.0MHz to 20MHz @ C_L = 30pF	-	8	10	ns
		20.001MHz to 80MHz @ C_L = 30pF	-	5	8	
		80.001MHz to 107MHz @ C_L = 15pF		2.5	5	
CB3LV		1.0MHz to 20MHz @ CL = 15pF		6	8	
		20.001MHz to 80MHz @ CL = 15pF		3	5	
		80.001MHz to 200MHz @ CL = 15pF	-	1.5	3	
Start Up Time	T_S	Application of V_{CC}	-	5	10	ms

2.] Parameters are worst case and account for comprehensive range of product specification. Performance may vary by application and must be validated by end user.

©2017 CTS® Corporation. Information/product(s) subject to change. No warranty that product(s) will meet the stated specifications for customer specific applications or test equipment. Visit www.ctscorp.com for list of applicable patent(s), more information, or to request a quote.

Electrical Specifications

Output Parameters

PARAMETER	SYMBOL	CONDITIONS	MIN	TYP	MAX	UNIT
Enable Function	Tri-State					
Enable Input Voltage	V_{IH}	Pin 1 Logic '1', Output Enabled	2.0	-	-	V
Disable Input Voltage	V_{IL}	Pin 1 Logic '0', Output Disabled	-	-	0.8	V
Enable Current	I_{STB}	Pin 1 Logic '0', Output Disabled	-	-	10	µA
Enable Time	T_{PLZ}	Pin 1 Logic '1'	-	-	10	ms
Phase Jitter, RMS	tjrms	Bandwidth 12 kHz - 20 MHz	-	0.5	< 1	ps

Enable Truth Table

Pin 1	Pin 3
Logic '1'	Output
Open	Output
Logic '0'	High Imp.

Test Circuit

HCMOS

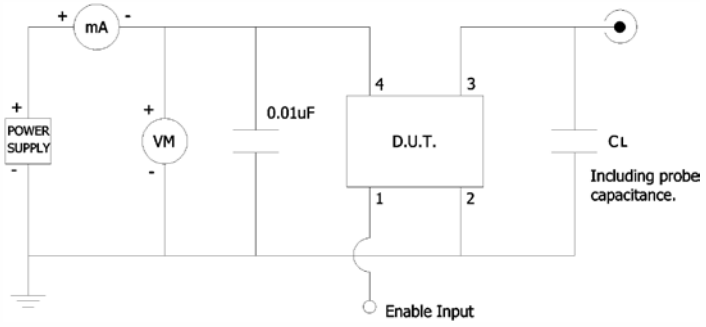

Output Waveform

HCMOS

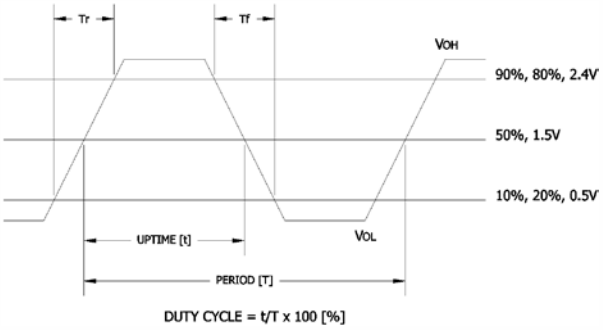

©2017 CTS® Corporation. Information/product(s) subject to change. No warranty that product(s) will meet the stated specifications for customer specific applications or test equipment. Visit www.ctscorp.com for list of applicable patent(s), more information, or to request a quote.

Mechanical Specifications

Package Drawing

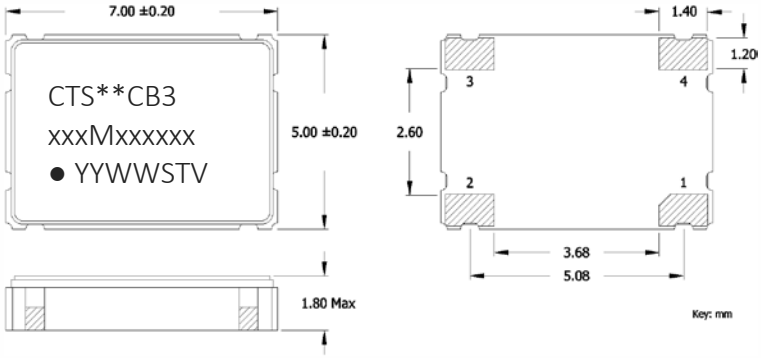

Marking Information

1. ** – Manufacturing Site Code.
   [Note a dash may follow the site code and is acceptable.]
2. xxxMxxxxxx – Frequency is marked with 1,2 or 3 leading significant digits before the "M" and 6 digits after the "M" [including zeroes].

Ex. xMxxxxxx [3M579545]
xxMxxxxxx [14M318180]
xxMxxxxxx [25M000000]
xxMxxxxxx [125M000000]

3. YYWW – Date Code; YY = year, WW = week.
4. ST – Frequency Stability/Temperature Code.
   [Refer to ordering information for codes.]
5. V – Voltage Code; 3 = +3.3V, 5 = +5.0V.

Recommended Pad Layout

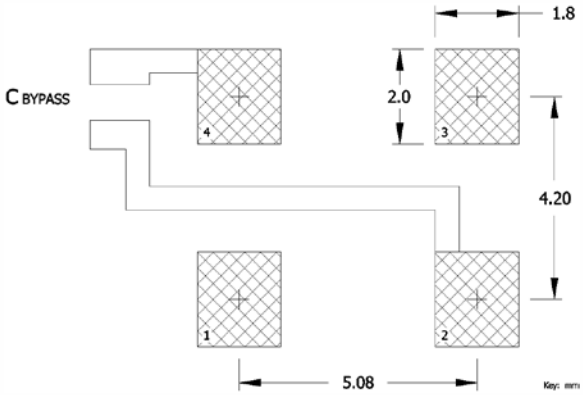

Notes

1. JEDEC termination code (e4). Barrier-plating is nickel [Ni] with gold [Au] flash plate.
2. Reflow conditions per JEDEC J-STD-020; +260°C maximum, 20 seconds.
3. MSL = 1.

Pin Assignments

Pin	Symbol	Function
1	EOH	Enable
2	GND	Circuit & Package Ground
3	Output	RF Output
4	V_{CC}	Supply Voltage

©2017 CTS® Corporation. Information/product(s) subject to change. No warranty that product(s) will meet the stated specifications for customer specific applications or test equipment. Visit www.ctscorp.com for list of applicable patent(s), more information, or to request a quote.

Packaging - Tape and Reel

Tape Drawing

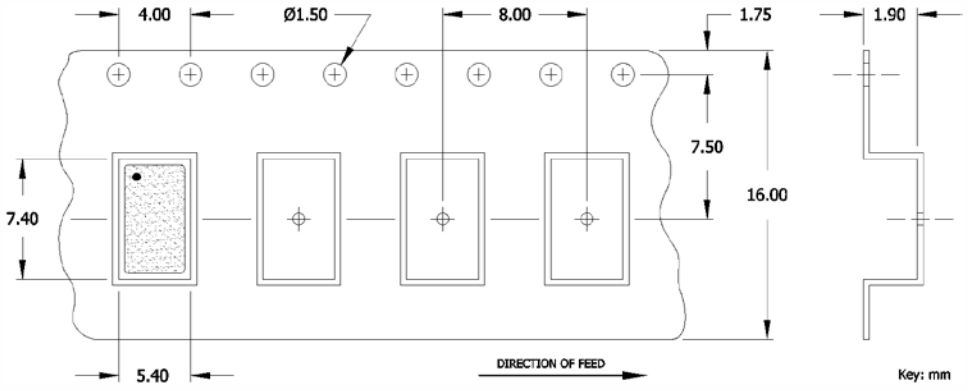

Reel Drawing

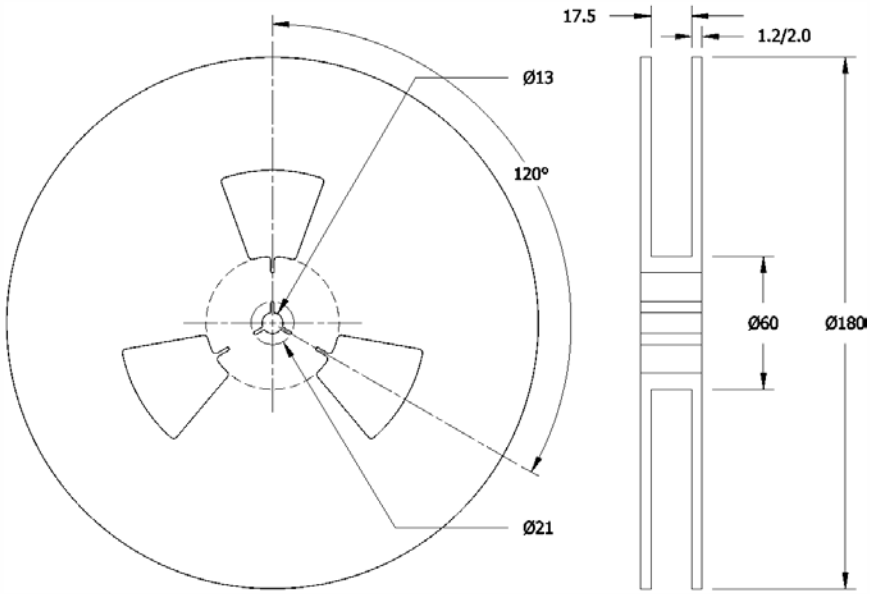

Notes

1. Device quantity is 1k pieces maximum per 180mm reel.
2. Complete CTS part number, frequency value and date code information must appear on reel and carton labels.

©2017 CTS® Corporation. Information/product(s) subject to change. No warranty that product(s) will meet the stated specifications for customer specific applications or test equipment. Visit www.ctscorp.com for list of applicable patent(s), more information, or to request a quote.

Addendum

Common Frequencies – MHz

FREQUENCY	FREQUENCY	FREQUENCY	FREQUENCY	FREQUENCY	FREQUENCY
1.000000	5.000000	16.384000	27.120000	45.000000	74.250000
1.024000	6.144000	16.666700	30.000000	48.000000	74.752800
1.042000	6.176000	16.667000	30.720000	49.152000	77.760000
1.440000	7.372800	16.670000	32.000000	50.000000	80.000000
1.544000	7.680000	18.192000	32.768000	52.000000	98.304000
1.843200	8.000000	18.432000	33.000000	54.000000	100.000000
2.000000	8.192000	19.200000	33.330000	60.000000	106.250000
2.048000	9.600000	19.440000	33.333000	61.140000	125.000000
2.176000	9.830400	19.660800	33.333300	64.000000	125.009375
2.400000	10.000000	20.000000	33.333330	65.536000	127.000000
2.457600	10.240000	20.480000	34.368000	66.000000	133.000000
2.500000	11.059200	22.118400	34.560000	66.660000	148.500000
3.072000	12.000000	24.000000	35.000000	66.666000	150.000000
3.088000	12.288000	24.545454	36.000000	66.666600	153.600000
3.579545	13.000000	24.574600	37.400000	66.666660	155.520000
3.686400	13.560000	24.576000	38.400000	66.666700	156.250000
4.000000	14.318180	25.000000	40.000000	66.667000	160.000000
4.096000	14.745600	25.000625	40.960000	66.670000	166.000000
4.500000	15.360000	26.000000	42.500000	74.175800	
4.915200	16.000000	27.000000	44.000000	74.175824	

©2017 CTS® Corporation. Information/product(s) subject to change. No warranty that product(s) will meet the stated specifications for customer specific applications or test equipment. Visit www.ctscorp.com for list of applicable patent(s), more information, or to request a quote.