ATSSMTS

Tight Stability Quartz Crystal

FEATURES

- **Standard HC-49/US-SM (surface mount) Package**
- **Fundamental and 3rd Overtone Crystals**
- Stable Frequency Over Temperature and Drive Level
- Frequency Range 3.2 – 64 MHz
- Frequency Tolerance, Options from ±10 ppm to ±30 ppm
- Frequency Stability, Options from ± 10 ppm to ±50 ppm
- Operating Temperature, –20°C to +70°C & -40°C to +85°C Standard
- Tape & Reel Packaging Standard
- **RoHS/Green Compliant (6/6)**

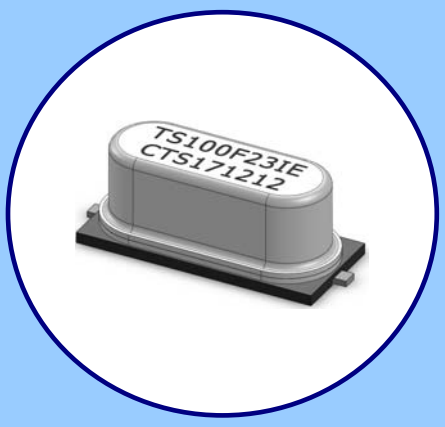

APPLICATIONS

The ATSSMTS [Tight Stability] crystal series offers excellent long-term stability and reliability in a proven resistance-weld metal package. The excellent shock performance makes it suitable for microprocessor, telecommunication, industrial, consumer electronics and networking applications.

ORDERING INFORMATION

TS □□□□□□□□□

FREQUENCY

Product Frequency Code [3 digits]

Refer to document 016-1454-0, Frequency Code Tables.

MODE OF OSCILLATION

F = Fundamental
T = 3rd Overtone

FREQUENCY TOLERANCE @ 25°C

1 = ± 10 ppm [1]	Y = ± 25 ppm
X = ± 15 ppm	3 = ± 30 ppm
2 = ± 20 ppm	

STABILITY TOLERANCE

Over Operating Temperature Range (Referenced to 25°C Reading)

1 = ± 10 ppm [1]	Y = ± 25 ppm
X = ± 15 ppm	3 = ± 30 ppm
2 = ± 20 ppm	5 = ± 50 ppm

PACKAGING OPTIONS

B - Bulk
T - Tape and Reel

LOAD CAPACITANCE

A = 10 pF	G = 30 pF
B = 13 pF	H = 32 pF
C = 16 pF	J = 9 pF
D = 18 pF	K = 8 pF
E = 20 pF	L = 12 pF
F = 24 pF	S = Series

TEMPERATURE RANGE OPTIONS

C - -20°C to +70°C
I - -40°C to +85°C [1]

1] Check factory availability for "11I" Tolerance/Stability/Temperature combination.

Not all performance combinations and frequencies may be available.
Contact your local CTS Representative or CTS Inside Sales Representative for availability.

ELECTRICAL CHARACTERISTICS

	PARAMETER	VALUE
ELECTRICAL PARAMETERS	Frequency Range	3.2 MHz to 64.0 MHz
	Operating Mode	Fundamental or 3rd Overtone
	Crystal Cut	AT-Cut
	Frequency Tolerance @ +25°C *	±10, ±15, ±20, ±25, ±30 ppm
	Frequency Stability Tolerance * (Over Operating Temperature Range, Referenced to +25°C Reading)	±10, ±15, ±20, ±25, ±30, ± 50 ppm
	Operating Temperature Range *	-20°C to +70°C and -40°C to +85°C
	Equivalent Series Resistance	See ESR Table
	Load Capacitance	See Ordering Information
	Shunt Capacitance (C_0)	7.0 pF Maximum
	Drive Level	100 µW Typical, 1,000 µW Maximum
	Aging @ +25°C	±3 ppm/yr Typical, ±5 ppm/yr Maximum
	Storage Temperature Range	-40°C to +85°C

* See Ordering Information

EQUIVALENT SERIES RESISTANCE TABLE

FREQUENCY RANGE	OSCILLATION MODE	ESR MAXIMUM
3.20 MHz - < 4.00 MHz	Fundamental	150 Ohms
4.00 MHz - < 5.00 MHz	Fundamental	120 Ohms
5.00 MHz - < 8.00 MHz	Fundamental	80 Ohms
8.00 MHz - < 12.00 MHz	Fundamental	60 Ohms
12.00 MHz - < 20.00 MHz	Fundamental	40 Ohms
20.00 MHz - < 30.00 MHz	Fundamental	30 Ohms
27.00 MHz - 64.00 MHz	3rd Overtone	80 Ohms

SCHEMATIC

MECHANICAL SPECIFICATIONS

PACKAGE DRAWING

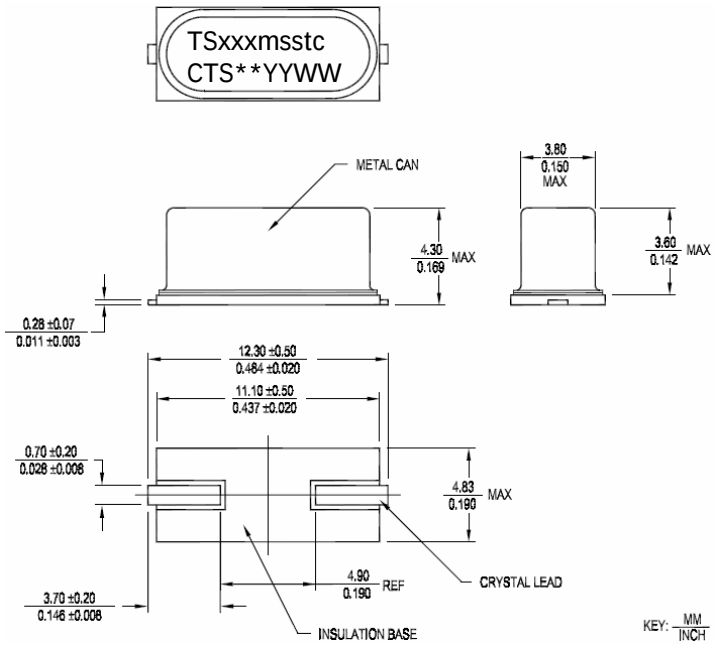

MARKING INFORMATION

1. TSxxxmsstc – Truncated CTS Part Number.
   [Packaging code is not required in the marking.]
   a) TS – ATSSMTS platform.
   b) xxx – 3-digit Frequency Code. [Reference document 016-1454-01]
2. m – Operating Mode; F = fundamental, T = 3rd Overtone.
   c) sstc – Tolerance, Stability, Temperature and Load Capacitance codes. Reference Ordering Information.
2. ** - Manufacturing Site Code.
3. YYWW – Date Code, YY – year, WW – week.
4. Complete CTS part number, frequency value and date code information must appear on bag and box labels.

NOTES

1. Lead finish (e1), SnAgCu.
2. Reflow conditions per JEDEC J-STD-020; 260°C maximum, 10 sec.
3. MSL = 1.

SUGGESTED SOLDER PAD GEOMETRY

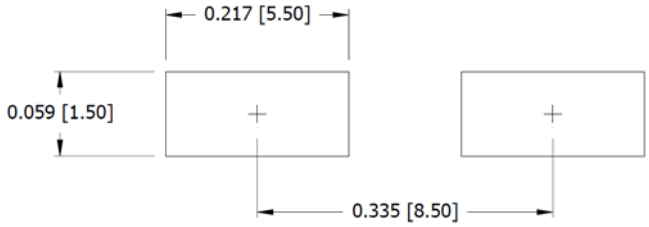

Key: Inch [mm]

PACKAGING INFORMATION
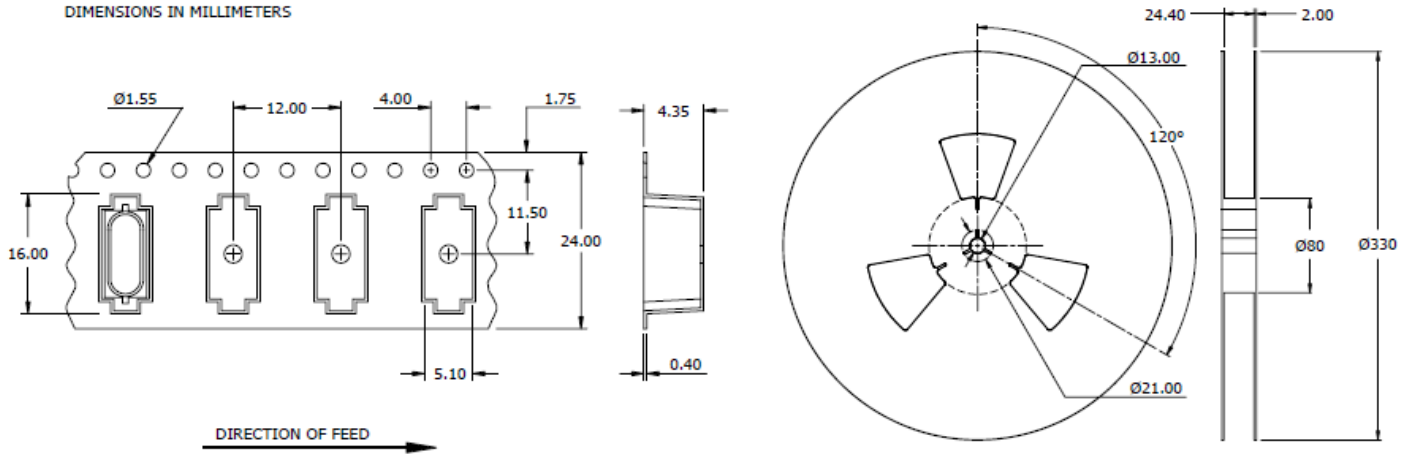
ATS-SM Tape and Reel [For Reference]