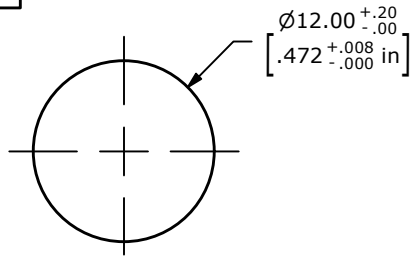

RECOMMENDED
PANEL CUT-OUT
1-6mm THICKNESS

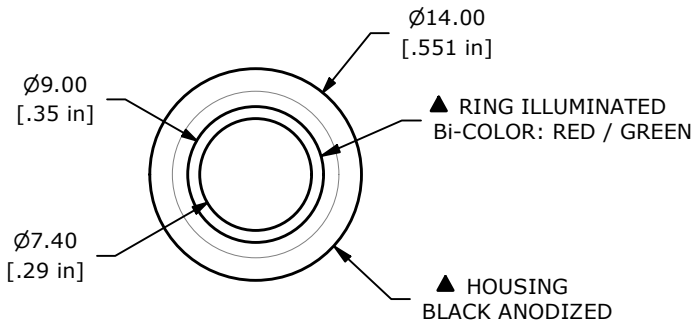

▲

SWITCH FUNCTION	
POS. 1	POS. 2
OFF	(ON)
OPEN	1-2

(ON) = MOMENTARY

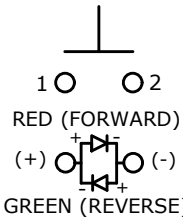

SPST OFF - (ON)
▲ CONTACT CONFIGURATION

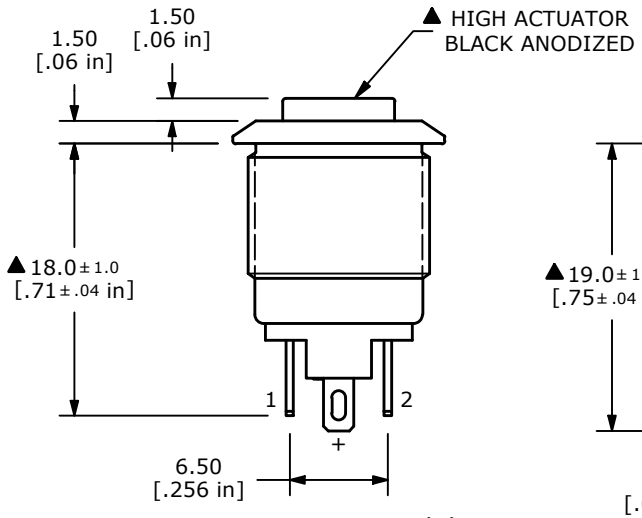

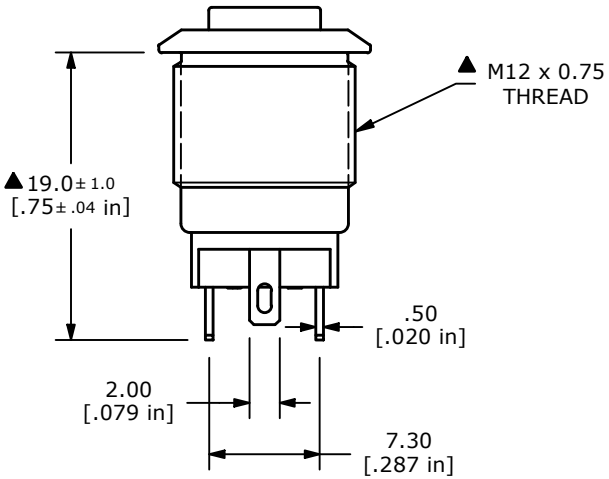

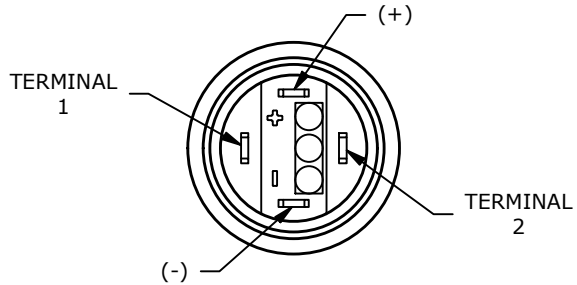

NOTE:
1. ALL DIMENSIONS IN MM [INCH]
2. GENERAL TOLERANCE: X.X = ± 0.4
   X.XX = ± 0.25
3. TERMINAL NOS. FOR REF. ONLY
4. RATING: 2A @ 36VDC
5. CONTACT RESISTANCE: 50mΩ MAX. @ 1A 12VDC
6. INSULATION RESISTANCE: 1,000MΩ @ 500VDC
7. DIELECTRIC STRENGTH: 2,000VAC MIN. FOR 1 MINUTE
8. ELECTRICAL LIFE: 200,000 CYCLES
9. CONTACT MATERIAL: SILVER
10. OPERATING TEMPERATURE: -20°C to 55°C
11. INGRESS PROTECTION: IP65
12. ▲ LED VOLTAGE: 1.8V 20mA (Forward), 2.8V 20mA (Reverse)
13. ▲ DENOTES CRITICAL PARAMETER
14. HARDWARE INCLUDED: HEX NUT AND O-RING (NOT SHOWN)

REV	PCR NO	DESCRIPTION	DATE	BY
C	24582	HOUSING UPDATE	11/9/20	JM
B	23191	UPDATED THREAD FROM ..0.5 TO ..0.75	1/29/18	MJR
A	22945	Release For Production	8/1/17	MW

THE INFORMATION CONTAINED IN THIS DOCUMENT IS PROPRIETARY TO E-SWITCH AND IS NOT TO BE COPIED OR TRANSFERRED

E-SWITCH®

OBJECT ID 000002287

TITLE PV0H24011-3G1

SCALE	DATE	DR	DWG	REV
2:1	8/1/2017	MW	52-PV0H240113G1	C

Mouser Electronics

Authorized Distributor

Click to View Pricing, Inventory, Delivery & Lifecycle Information:

E-Switch:

PV0H24011-3G1