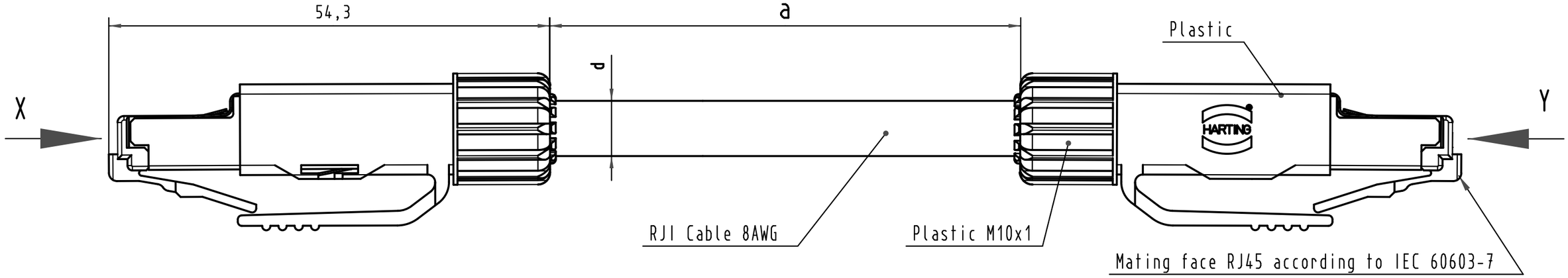

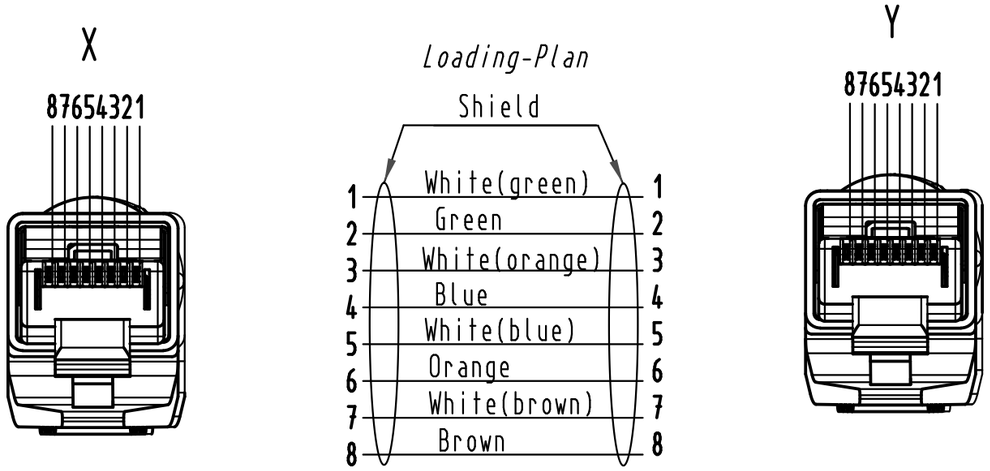

-Transmission properties in accordance
with ISO/IEC 11801:2002: Class E for a < 20 m
For a > 20 m class E performance can not be guaranteed
-Protection level: IP20
-Temperature range: -40°C ...+70°C

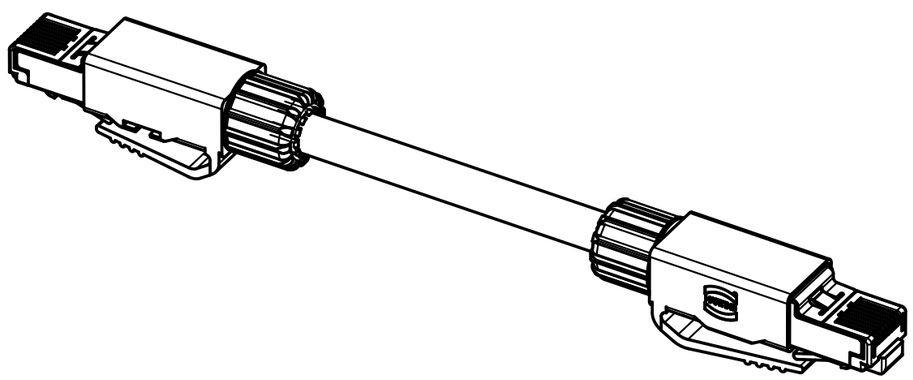

Cont-No.	Part-No.	Type of cable	Dim. d [mm]	Dim. a [mm]
33	09 45 751 1574	8xAWG 27/7, stranded, PUR, Cat6	ø 6.7	20.000
32	09 45 751 1573	8xAWG 27/7, stranded, PUR, Cat6	ø 6.7	15.000
31	09 45 751 1572	8xAWG 27/7, stranded, PUR, Cat6	ø 6.7	10.000
30	09 45 751 1571	8xAWG 27/7, stranded, PUR, Cat6	ø 6.7	9.000
29	09 45 751 1570	8xAWG 27/7, stranded, PUR, Cat6	ø 6.7	8.000
28	09 45 751 1569	8xAWG 27/7, stranded, PUR, Cat6	ø 6.7	7.000
27	09 45 751 1568	8xAWG 27/7, stranded, PUR, Cat6	ø 6.7	6.000
26	09 45 751 1567	8xAWG 27/7, stranded, PUR, Cat6	ø 6.7	5.000
25	09 45 751 1566	8xAWG 27/7, stranded, PUR, Cat6	ø 6.7	4.000
24	09 45 751 1565	8xAWG 27/7, stranded, PUR, Cat6	ø 6.7	3.000
23	09 45 751 1564	8xAWG 27/7, stranded, PUR, Cat6	ø 6.7	2.000
22	09 45 751 1563	8xAWG 27/7, stranded, PUR, Cat6	ø 6.7	1.500
21	09 45 751 1562	8xAWG 27/7, stranded, PUR, Cat6	ø 6.7	1.000
20	09 45 751 1561	8xAWG 27/7, stranded, PUR, Cat6	ø 6.7	500
19	09 45 751 1534	8xAWG 28/7, stranded, PVC, Cat6	ø 6.6	8.500
18	09 45 751 1533	8xAWG 28/7, stranded, PVC, Cat6	ø 6.6	7.500
17	09 45 751 1532	8xAWG 28/7, stranded, PVC, Cat6	ø 6.6	6.500
16	09 45 751 1557	8xAWG 28/7, stranded, PVC, Cat6	ø 6.6	40.000
15	09 45 751 1554	8xAWG 28/7, stranded, PVC, Cat6	ø 6.6	600
14	09 45 751 1553	8xAWG 28/7, stranded, PVC, Cat6	ø 6.6	20.000
13	09 45 751 1552	8xAWG 28/7, stranded, PVC, Cat6	ø 6.6	15.000
12	09 45 751 1551	8xAWG 28/7, stranded, PVC, Cat6	ø 6.6	10.000
11	09 45 751 1531	8xAWG 28/7, stranded, PVC, Cat6	ø 6.6	9.000
10	09 45 751 1530	8xAWG 28/7, stranded, PVC, Cat6	ø 6.6	8.000
9	09 45 751 1529	8xAWG 28/7, stranded, PVC, Cat6	ø 6.6	7.000
8	09 45 751 1528	8xAWG 28/7, stranded, PVC, Cat6	ø 6.6	6.000
7	09 45 751 1527	8xAWG 28/7, stranded, PVC, Cat6	ø 6.6	5.000
6	09 45 751 1526	8xAWG 28/7, stranded, PVC, Cat6	ø 6.6	4.000
5	09 45 751 1525	8xAWG 28/7, stranded, PVC, Cat6	ø 6.6	3.000
4	09 45 751 1524	8xAWG 28/7, stranded, PVC, Cat6	ø 6.6	2.000
3	09 45 751 1523	8xAWG 28/7, stranded, PVC, Cat6	ø 6.6	1.500
2	09 45 751 1522	8xAWG 28/7, stranded, PVC, Cat6	ø 6.6	1.000
1	09 45 751 1521	8xAWG 28/7, stranded, PVC, Cat6	ø 6.6	500

All Dimensions in mm
Original Size DIN A 3

Techn. Character.

Nicht tolerierte Maße/ *Free size tolerances*

				Dat.	Name
DRS474A	25.02.09	MS	Detail.	27.03.07	MS
35037	04.11.08	MS	Insp.		
34511	23.11.07	MR	Stand.		
34115	11.10.07	MS			
34076					
Mod.	Dat.	Name			

Maßstab/*Scale* 2:1

HARTING Electronics GmbH & Co. KG
D-32339 ESPELKAMP

RJI Cord 8AWG, IP20
2x RJ45 Plastic

TB 09 45 751 15xx

Blatt/ *page*

Sub.

Alle Rechte vorbehalten/ *All rights reserved*

Mouser Electronics

Authorized Distributor

Click to View Pricing, Inventory, Delivery & Lifecycle Information:

HARTING:
09457511523 09457511525 09457511527 09457511551 09457511553 09457511522 09457511524 09457511529 09457511531 09457511532 09457511533 09457511534 09457511554 09457511561 09457511563 09457511565 09457511567 09457511569 09457511572 09457511574