Customer Information Sheet

DRAWING No.: M80-510XXXX	SHEET 2 OF 2	IF IN DOUBT - ASK	©	NOT TO SCALE	THIRD ANGLE PROJECTION	ALL DIMENSIONS IN mm

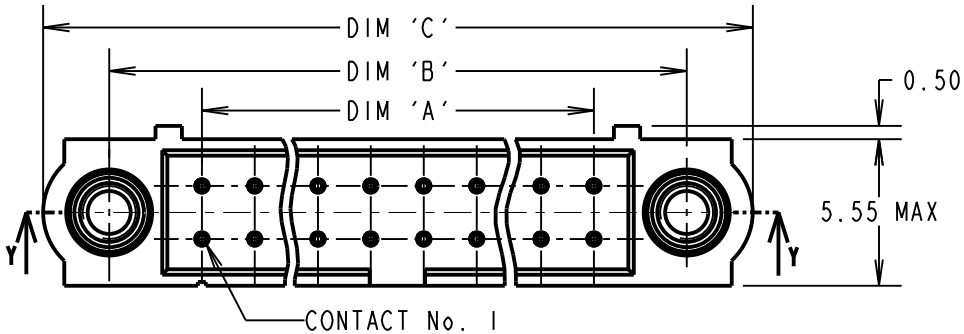

ORDER CODE:

M80-510XXXX

No. OF CONTACTS
04 TO 50
(EVEN NUMBERS ONLY)

FINISH
- 05 - GOLD ALL OVER
- 22 - SELECTIVE GOLD + TIN/LEAD
- 42 - SELECTIVE GOLD + 100% TIN OVER NICKEL

SPECIFICATIONS:
MATERIAL:
MOULDING = GLASS-FILLED PPS, UL94V-0, BLACK
CONTACT = PHOSPHOR BRONZE
JACKSCREW = STAINLESS STEEL
FINISH (CONTACTS):
22 = 0.75µ GOLD ON CONTACT AREA, 3µ 90/10 TIN/LEAD ON TAILS
42 = 0.75µ GOLD ON CONTACT AREA, 3µ 100% TIN OVER NICKEL ON TAILS
05 = 0.75µ GOLD ALL OVER
ELECTRICAL:
CURRENT RATING AT 25°C = 3.0A MAX
CURRENT RATING AT 85°C = 2.2A MAX
WORKING VOLTAGE = 800V AC/DC
VOLTAGE PROOF = 1200V AC/DC
CONTACT RESISTANCE = 25 mΩ MAX
INSULATION RESISTANCE = 100 MΩ MIN
MECHANICAL:
DURABILITY = 500 OPERATIONS
ENVIRONMENTAL:
TEMPERATURE RANGE = -55°C TO +125°C
PACKING: TUBE
FOR COMPLETE SPECIFICATION, SEE COMPONENT SPECIFICATION C005XX (LATEST ISSUE)

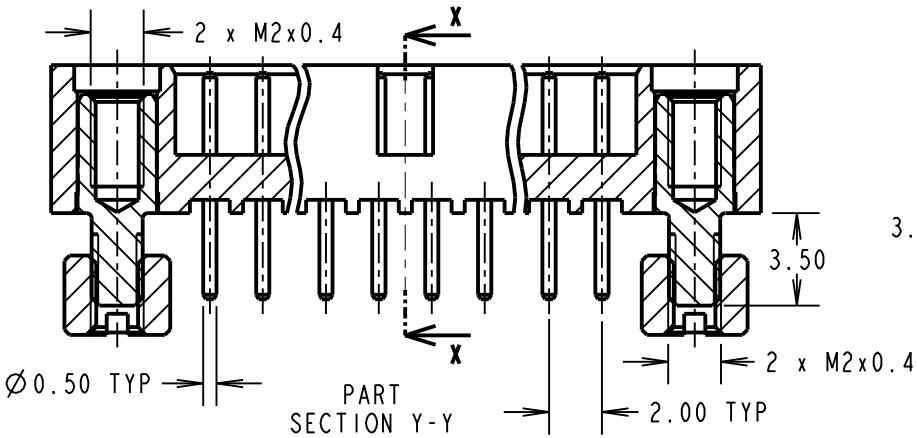

PART SECTION Y-Y

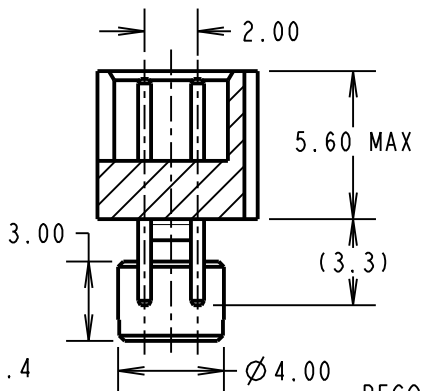

SECTION X-X

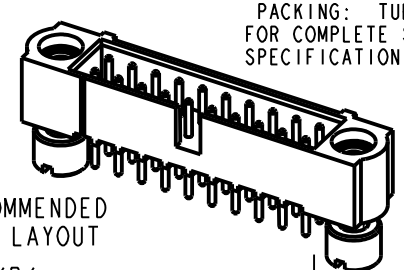

RECOMMENDED PCB LAYOUT

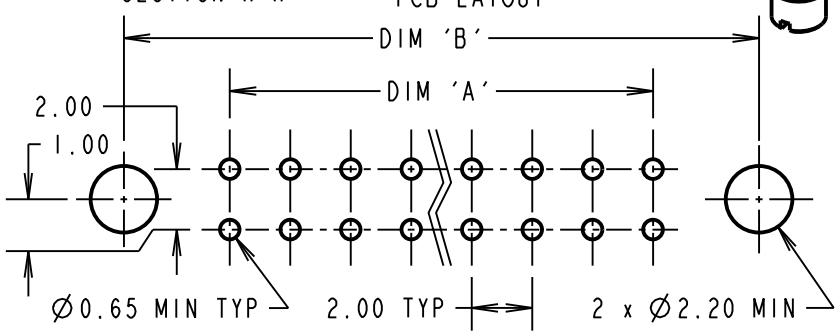

DIMENSION	CALCULATION
DIM 'A'	TOTAL No. OF CONTACTS - 2
DIM 'B'	TOTAL No. OF CONTACTS + 5
DIM 'C'	TOTAL No. OF CONTACTS + 10

EXAMPLE: CONNECTOR WITH 20 CONTACTS, GOLD ON CONTACT AREA AND 100% TIN OVER NICKEL ON TAIL, M80-5102042

DIM 'A' = 18.00mm DIM 'B' = 25.00mm DIM 'C' = 30.00mm

NAME	ISS.	DATE	C/NOTE
MGP	2	28.03.13	11987

APPROVED: MGP
CHECKED: SB
DRAWN: W. J. BOURNE
CUSTOMER REF.:
ASSEMBLY DRG:

HARWIN

www.harwin.com
technical@harwin.com

THIS DRAWING AND ANY INFORMATION OR DESCRIPTIVE MATTER SET OUT HEREON ARE CONFIDENTIAL AND COPYRIGHT PROPERTY OF THE HARWIN GROUP AND MUST NOT BE DISCLOSED, LOANED, COPIED OR USED FOR MANUFACTURING, TENDERING OR FOR ANY OTHER PURPOSE WITHOUT THEIR WRITTEN PERMISSION.

TOLERANCES
X. = ±1mm
X.X = ±0.25mm
X.XX = ±0.10mm
X.XXX = ±0.01mm
ANGLES = ±5°
UNLESS STATED

MATERIAL: SEE ABOVE
FINISH: SEE ABOVE
S/AREA: mm²

TITLE: DATAMATE J-TEK DIL VERT 3.0mm PC TAIL MALE ASSY WITH BOARD MOUNT

DRAWING NUMBER: M80-510XXXX

SHT 2 OF 2