Feb.1.2018 Copyright 2018 HIROSE ELECTRIC CO., LTD. All Rights Reserved.

| | COUNT | DESCRIPTION OF REVISIONS | BY | CHKD | DATE | | COUNT | DESCRIPTION OF REVISIONS | BY | CHKD | DATE |
|---|---|---|---|---|---|---|---|---|---|---|---|
| △ | | | | | . . | △ | | | | | . . |
| △ | | | | | . . | △ | | | | | . . |
| △ | | | | | . . | △ | | | | | . . |

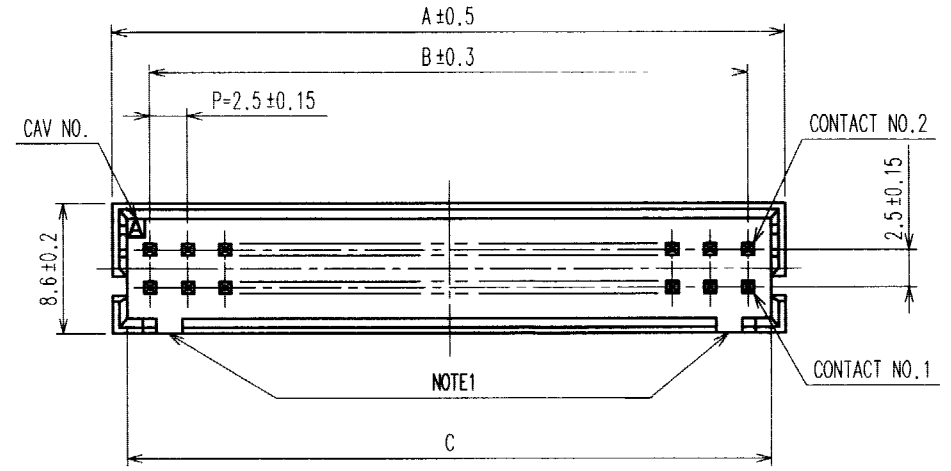


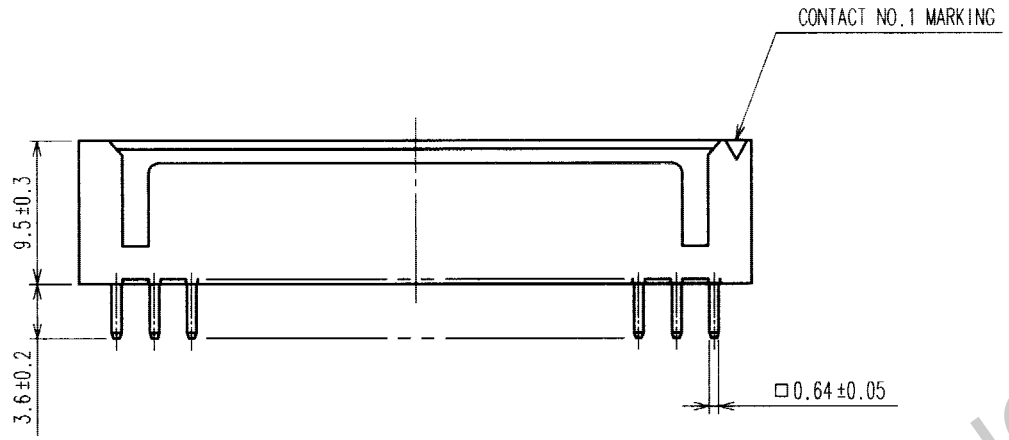


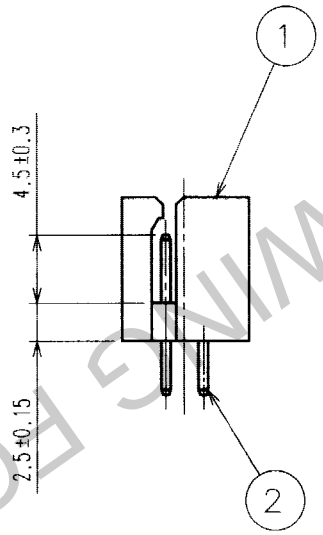


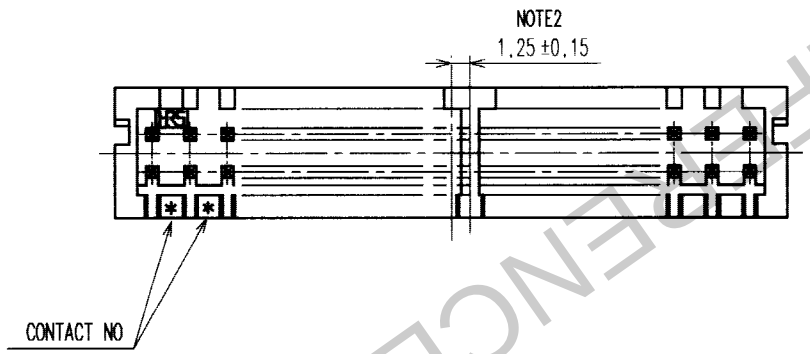


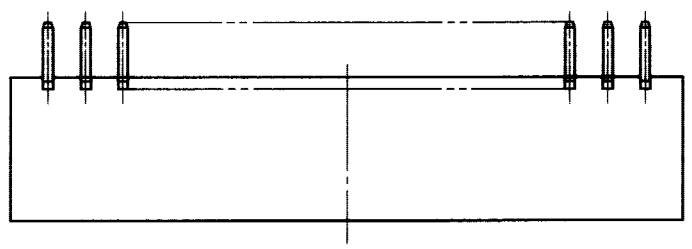

NOTE1: 4 POSITIONS AND 6 POSITIONS HEADERS HAVE ONE POLARIZING SLOT AT CENTER. OTHER POSITIONS HAVE 2 POLARIZING SLOTS AS PER DRAWING.

NOTE2: WHEN THE NUMBERS OF CONTACTS OF FIRST ROW IS ODD, THE STAND-OFF SHIFTS 1.25 RIGHTWARD. (STAND-OFF AVAILABLE FROM 8 POSITIONS UP.)

| HRS NO. | PART NO. | NUMBER OF CONTACT | A | B | C |
|---|---|---|---|---|---|
| CL541-0651-5-01 | DF1B- 4DP-2.5DSA(01) | 4 | 7.5 | 2.5 | 5.6 |
| CL541-0652-8-01 | DF1B- 6DP-2.5DSA(01) | 6 | 10.0 | 5.0 | 8.1 |
| CL541-0653-0-01 | DF1B- 8DP-2.5DSA(01) | 8 | 12.5 | 7.5 | 10.6 |
| CL541-0616-4-01 | DF1B-10DP-2.5DSA(01) | 10 | 15.0 | 10.0 | 13.1 |
| CL541-0617-7-01 | DF1B-12DP-2.5DSA(01) | 12 | 17.5 | 12.5 | 15.6 |
| CL541-0618-0-01 | DF1B-14DP-2.5DSA(01) | 14 | 20.0 | 15.0 | 18.1 |
| CL541-0619-2-01 | DF1B-16DP-2.5DSA(01) | 16 | 22.5 | 17.5 | 20.6 |
| CL541-0620-1-01 | DF1B-18DP-2.5DSA(01) | 18 | 25.0 | 20.0 | 23.1 |
| CL541-0621-4-01 | DF1B-20DP-2.5DSA(01) | 20 | 27.5 | 22.5 | 25.6 |
| CL541-0622-7-01 | DF1B-22DP-2.5DSA(01) | 22 | 30.0 | 25.0 | 28.1 |
| CL541-0623-0-01 | DF1B-24DP-2.5DSA(01) | 24 | 32.5 | 27.5 | 30.6 |
| CL541-0624-2-01 | DF1B-26DP-2.5DSA(01) | 26 | 35.0 | 30.0 | 33.1 |
| CL541-0625-5-01 | DF1B-28DP-2.5DSA(01) | 28 | 37.5 | 32.5 | 35.6 |
| CL541-0626-8-01 | DF1B-30DP-2.5DSA(01) | 30 | 40.0 | 35.0 | 38.1 |
| CL541-0628-3-01 | DF1B-34DP-2.5DSA(01) | 34 | 45.0 | 40.0 | 43.1 |
| CL541-0629-6-01 | DF1B-36DP-2.5DSA(01) | 36 | 47.5 | 42.5 | 45.6 |
| CL541-0631-8-01 | DF1B-40DP-2.5DSA(01) | 40 | 52.5 | 47.5 | 50.6 |

RECOMMENDED PATTERN ( 5 : 1 )

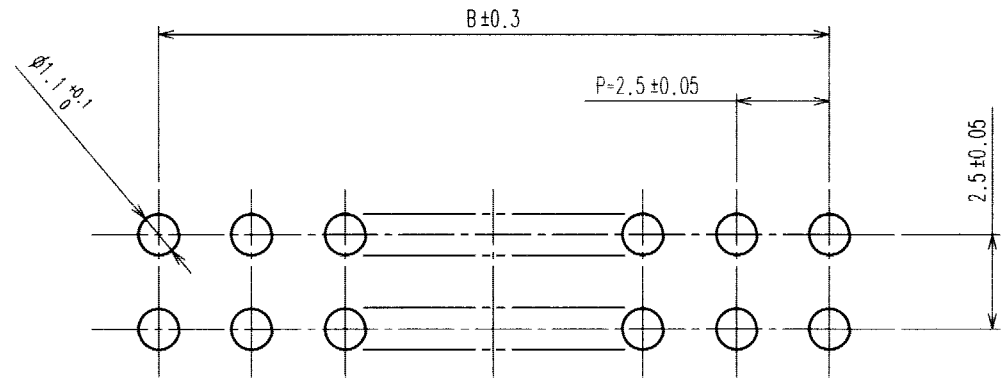


| NO. | MATERIAL | FINISH, REMARKS | NO. | MATERIAL | FINISH, REMARKS |
|---|---|---|---|---|---|
| 1 | POLYAMIDE | NATURAL(WHITE), UL94V-0 | 2 | BRASS | UNDER PLATING:NICKEL PLATED 1μm MIN<br>OVERPLATING:GOLD PLATED 0.2μm MIN |

| CODE NO.(OLD) | DRAWN | DESIGNED | CHECKED | APPROVED | RELEASED |
|---|---|---|---|---|---|
| CL | M.KURAMASHI 03.03.13 | T.Kumagawa 03.03.17 | H.Umehara 03.03.17 | K.Katayama '03.3.17 | . . |

| | | |
|---|---|---|
| SCALE 2 : 1 | DRAWING NO. EDC3-071800-01 | PART NO. DF1B-*DP-2.5DSA(01) |
| UNITS mm | HRS HIROSE ELECTRIC CO., LTD | CODE NO. CL541 1/1 |

TO

FOR REFERENCE