International
IOR Rectifier

IRGB4062DPbF
IRGP4062DPbF

INSULATED GATE BIPOLAR TRANSISTOR WITH ULTRAFAST SOFT RECOVERY DIODE

Features

- Low $V_{CE\ (ON)}$ Trench IGBT Technology
- Low switching losses
- Maximum Junction temperature 175 °C
- 5 µS short circuit SOA
- Square RBSOA
- 100% of the parts tested for 4X rated current (I_{LM})
- Positive $V_{CE\ (ON)}$ Temperature co-efficient
- Ultra fast soft Recovery Co-Pak Diode
- Tight parameter distribution
- Lead Free Package

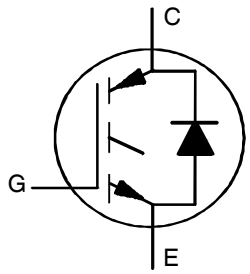

n-channel

V_{CES} = 600V

I_C = 24A, T_C = 100°C

$t_{SC} \geq$ 5µs, $T_{J(max)}$ = 175°C

$V_{CE(on)}$ typ. = 1.65V

Benefits

- High Efficiency in a wide range of applications
- Suitable for a wide range of switching frequencies due to Low $V_{CE\ (ON)}$ and Low Switching losses
- Rugged transient Performance for increased reliability
- Excellent Current sharing in parallel operation
- Low EMI

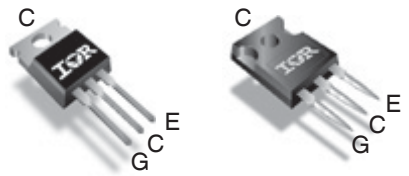

TO-220AB TO-247AC

G	C	E
Gate	Collector	Emitter

Absolute Maximum Ratings

	Parameter	Max.	Units
V_{CES}	Collector-to-Emitter Voltage	600	V
I_C @ T_C = 25°C	Continuous Collector Current	48	A
I_C @ T_C = 100°C	Continuous Collector Current	24	
I_{CM}	Pulse Collector Current	96	
I_{LM}	Clamped Inductive Load Current ①	96	
I_F @ T_C = 25°C	Diode Continous Forward Current	48	
I_F @ T_C = 100°C	Diode Continous Forward Current	24	
I_{FM}	Diode Maximum Forward Current ③	96	
V_{GE}	Continuous Gate-to-Emitter Voltage	±20	V
	Transient Gate-to-Emitter Voltage	±30	
P_D @ T_C = 25°C	Maximum Power Dissipation	250	W
P_D @ T_C = 100°C	Maximum Power Dissipation	125	
T_J T_{STG}	Operating Junction and Storage Temperature Range	-55 to +175	°C
	Soldering Temperature, for 10 sec.	300 (0.063 in. (1.6mm) from case)	
	Mounting Torque, 6-32 or M3 Screw	10 lbf·in (1.1 N·m)	

Thermal Resistance

	Parameter	Min.	Typ.	Max.	Units
$R_{\theta JC}$ (IGBT)	Thermal Resistance Junction-to-Case-(each IGBT) TO-220AB	——	——	0.60	°C/W
$R_{\theta JC}$ (Diode)	Thermal Resistance Junction-to-Case-(each Diode) TO-220AB	——	——	1.53	
$R_{\theta JC}$ (IGBT)	Thermal Resistance Junction-to-Case-(each IGBT) TO-247AC	——	——	0.65	
$R_{\theta JC}$ (Diode)	Thermal Resistance Junction-to-Case-(each Diode) TO-247AC	——	——	1.62	
$R_{\theta CS}$	Thermal Resistance, Case-to-Sink (flat, greased surface)	——	0.50	——	
$R_{\theta JA}$	Thermal Resistance, Junction-to-Ambient (typical socket mount)	——	80	——	

Electrical Characteristics @ T_J = 25°C (unless otherwise specified)

	Parameter	Min.	Typ.	Max.	Units	Conditions	Ref.Fig
$V_{(BR)CES}$	Collector-to-Emitter Breakdown Voltage	600	—	—	V	V_{GE} = 0V, I_C = 100μA ④	CT6
$\Delta V_{(BR)CES}/\Delta T_J$	Temperature Coeff. of Breakdown Voltage	—	0.30	—	V/°C	V_{GE} = 0V, I_C = 1mA (25°C-175°C)	CT6
$V_{CE(on)}$	Collector-to-Emitter Saturation Voltage	—	1.60	1.95	V	I_C = 24A, V_{GE} = 15V, T_J = 25°C	5,6,7
		—	2.03	—		I_C = 24A, V_{GE} = 15V, T_J = 150°C	9,10,11
		—	2.04	—		I_C = 24A, V_{GE} = 15V, T_J = 175°C	
$V_{GE(th)}$	Gate Threshold Voltage	4.0	—	6.5	V	V_{CE} = V_{GE}, I_C = 700μA	9, 10,
$\Delta V_{GE(th)}/\Delta TJ$	Threshold Voltage temp. coefficient	—	-18	—	mV/°C	V_{CE} = V_{GE}, I_C = 1.0mA (25°C - 175°C)	11, 12
gfe	Forward Transconductance	—	17	—	S	V_{CE} = 50V, I_C = 24A, PW = 80μs	
I_{CES}	Collector-to-Emitter Leakage Current	—	2.0	25	μA	V_{GE} = 0V, V_{CE} = 600V	
		—	775	—		V_{GE} = 0V, V_{CE} = 600V, T_J = 175°C	
V_{FM}	Diode Forward Voltage Drop	—	1.80	2.6	V	I_F = 24A	8
		—	1.28	—		I_F = 24A, T_J = 175°C	
I_{GES}	Gate-to-Emitter Leakage Current	—	—	±100	nA	V_{GE} = ±20V	

Switching Characteristics @ T_J = 25°C (unless otherwise specified)

	Parameter	Min.	Typ.	Max.	Units	Conditions	Ref.Fig
Q_g	Total Gate Charge (turn-on)	—	50	75	nC	I_C = 24A	24
Q_{ge}	Gate-to-Emitter Charge (turn-on)	—	13	20		V_{GE} = 15V	CT1
Q_{gc}	Gate-to-Collector Charge (turn-on)	—	21	31		V_{CC} = 400V	
E_{on}	Turn-On Switching Loss	—	115	201	μJ	I_C = 24A, V_{CC} = 400V, V_{GE} = 15V	CT4
E_{off}	Turn-Off Switching Loss	—	600	700		R_G = 10Ω, L = 200μH, L_S = 150nH, T_J = 25°C	
E_{total}	Total Switching Loss	—	715	901		Energy losses include tail & diode reverse recovery	
$t_{d(on)}$	Turn-On delay time	—	41	53	ns	I_C = 24A, V_{CC} = 400V, V_{GE} = 15V	CT4
t_r	Rise time	—	22	31		R_G = 10Ω, L = 200μH, L_S = 150nH, T_J = 25°C	
$t_{d(off)}$	Turn-Off delay time	—	104	115			
t_f	Fall time	—	29	41			
E_{on}	Turn-On Switching Loss	—	420	—	μJ	I_C = 24A, V_{CC} = 400V, V_{GE}=15V	13, 15
E_{off}	Turn-Off Switching Loss	—	840	—		R_G=10Ω, L=100μH, L_S=150nH, T_J = 175°C ④	CT4
E_{total}	Total Switching Loss	—	1260	—		Energy losses include tail & diode reverse recovery	WF1, WF2
$t_{d(on)}$	Turn-On delay time	—	40	—	ns	I_C = 24A, V_{CC} = 400V, V_{GE} = 15V	14, 16
t_r	Rise time	—	24	—		R_G = 10Ω, L = 200μH, L_S = 150nH	CT4
$t_{d(off)}$	Turn-Off delay time	—	125	—		T_J = 175°C	WF1
t_f	Fall time	—	39	—			WF2
C_{ies}	Input Capacitance	—	1490	—	pF	V_{GE} = 0V	23
C_{oes}	Output Capacitance	—	129	—		V_{CC} = 30V	
C_{res}	Reverse Transfer Capacitance	—	45	—		f = 1.0Mhz	
RBSOA	Reverse Bias Safe Operating Area	FULL SQUARE				T_J = 175°C, I_C = 96A V_{CC} = 480V, Vp =600V Rg = 10Ω, V_{GE} = +15V to 0V	4 CT2
SCSOA	Short Circuit Safe Operating Area	5	—	—	μs	V_{CC} = 400V, Vp =600V Rg = 10Ω, V_{GE} = +15V to 0V	22, CT3 WF4
Erec	Reverse Recovery Energy of the Diode	—	621	—	μJ	T_J = 175°C	17, 18, 19
t_{rr}	Diode Reverse Recovery Time	—	89	—	ns	V_{CC} = 400V, I_F = 24A	20, 21
I_{rr}	Peak Reverse Recovery Current	—	37	—	A	V_{GE} = 15V, Rg = 10Ω, L =200μH, L_s = 150nH	WF3

Notes:

① V_{CC} = 80% (V_{CES}), V_{GE} = 20V, L = 100μH, R_G = 10Ω.
② This is only applied to TO-220AB package.
③ Pulse width limited by max. junction temperature.
④ Refer to AN-1086 for guidelines for measuring $V_{(BR)CES}$ safely.

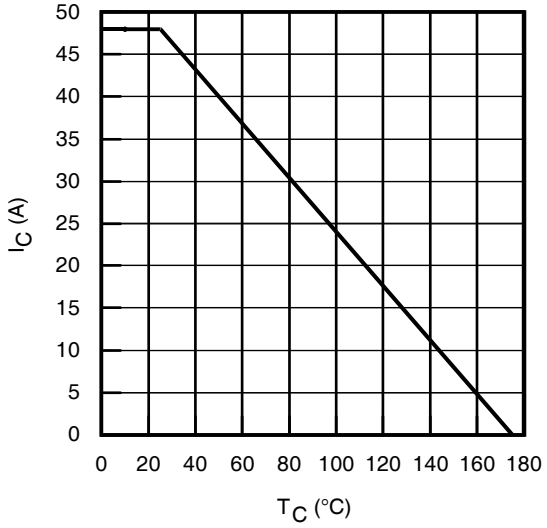

Fig. 1 - Maximum DC Collector Current vs. Case Temperature

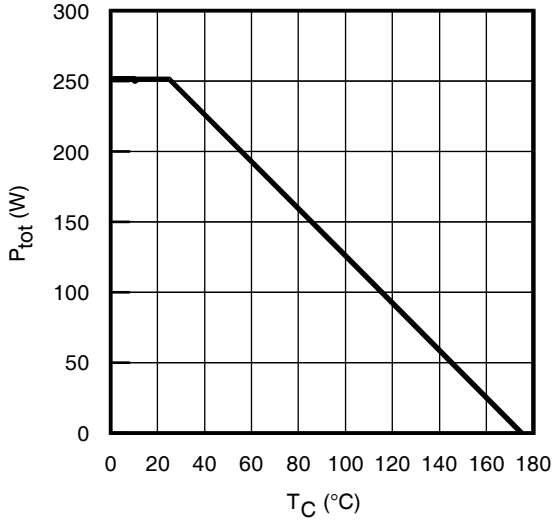

Fig. 2 - Power Dissipation vs. Case Temperature

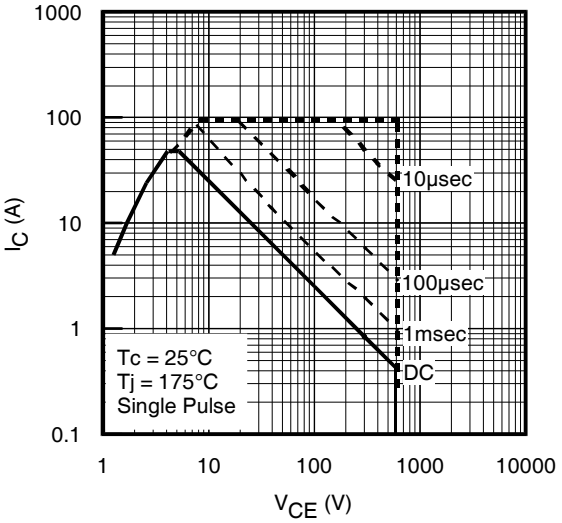

Fig. 3 - Forward SOA
T_C = 25°C, $T_J \leq$ 175°C; V_{GE} =15V

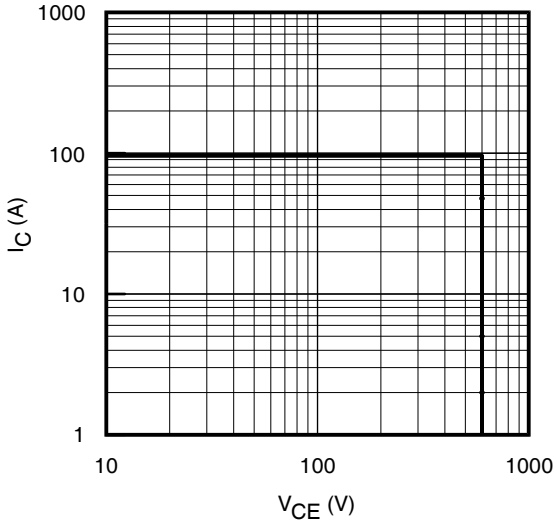

Fig. 4 - Reverse Bias SOA
T_J = 175°C; V_{GE} =15V

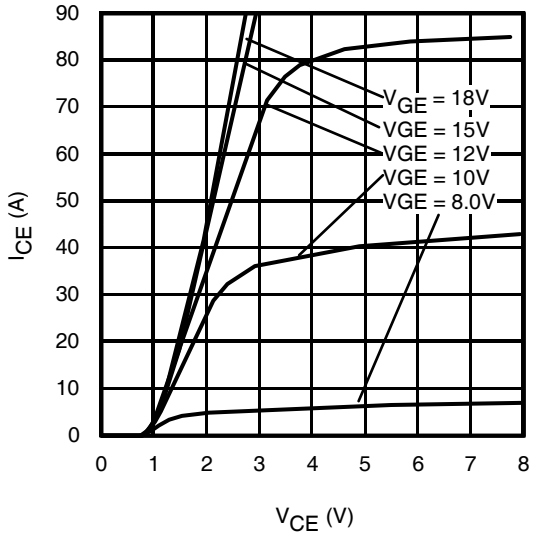

Fig. 5 - Typ. IGBT Output Characteristics
T_J = -40°C; tp = 80µs

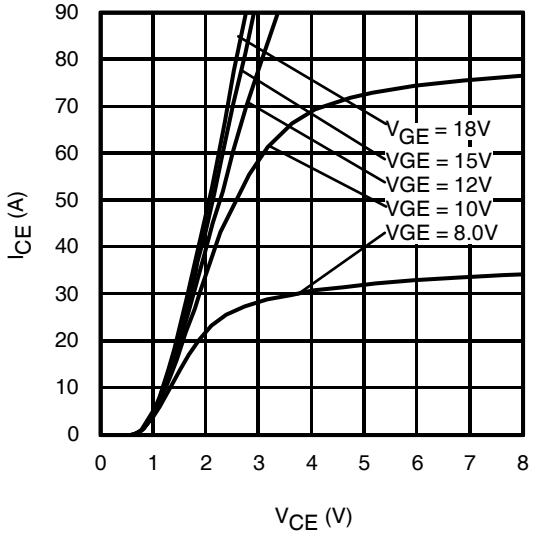

Fig. 6 - Typ. IGBT Output Characteristics
T_J = 25°C; tp = 80µs

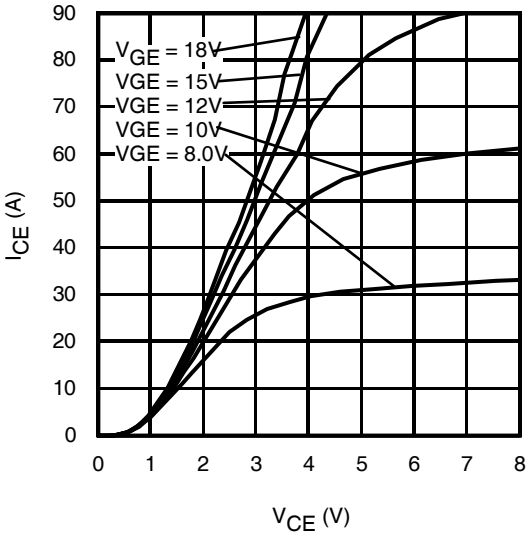

Fig. 7 - Typ. IGBT Output Characteristics
T_J = 175°C; tp = 80µs

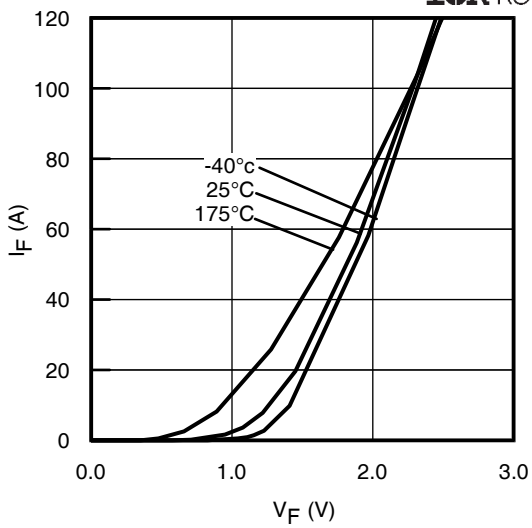

Fig. 8 - Typ. Diode Forward Characteristics
tp = 80µs

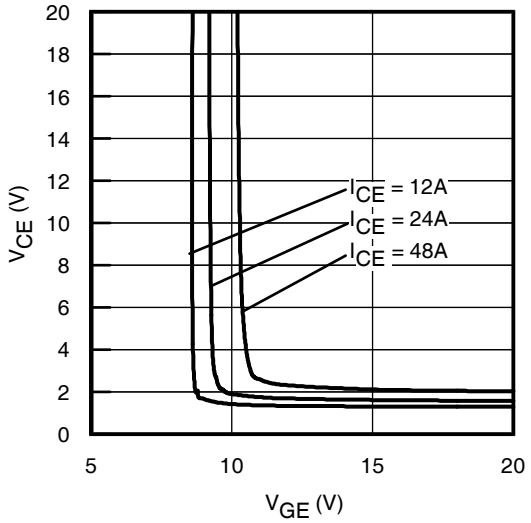

Fig. 9 - Typical V_{CE} vs. V_{GE}
T_J = -40°C

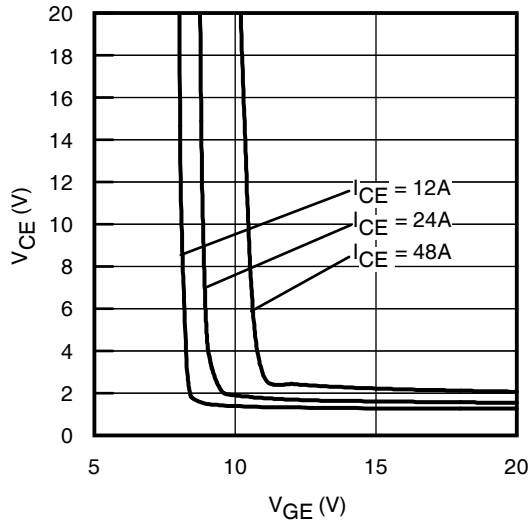

Fig. 10 - Typical V_{CE} vs. V_{GE}
T_J = 25°C

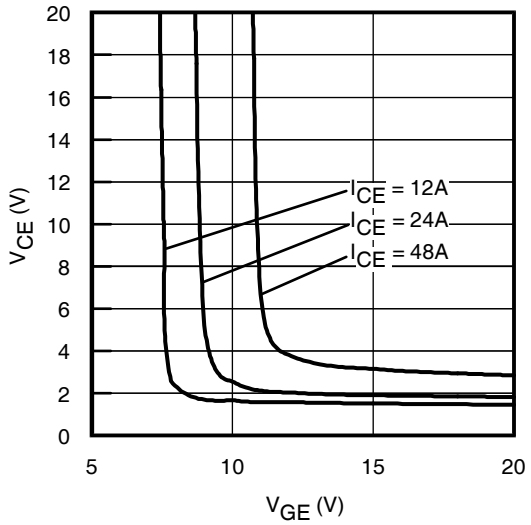

Fig. 11 - Typical V_{CE} vs. V_{GE}
T_J = 175°C

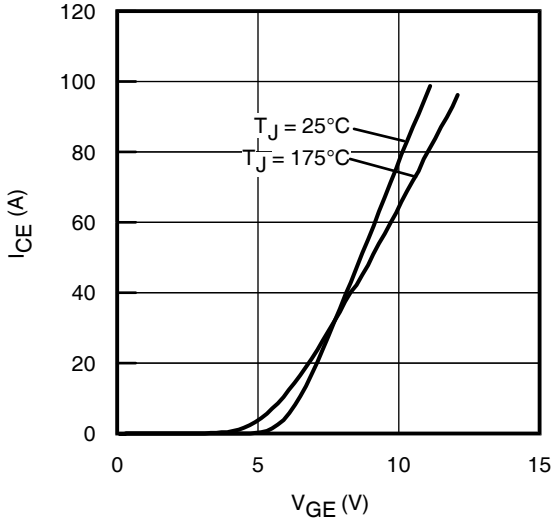

Fig. 12 - Typ. Transfer Characteristics
V_{CE} = 50V; tp = 10µs

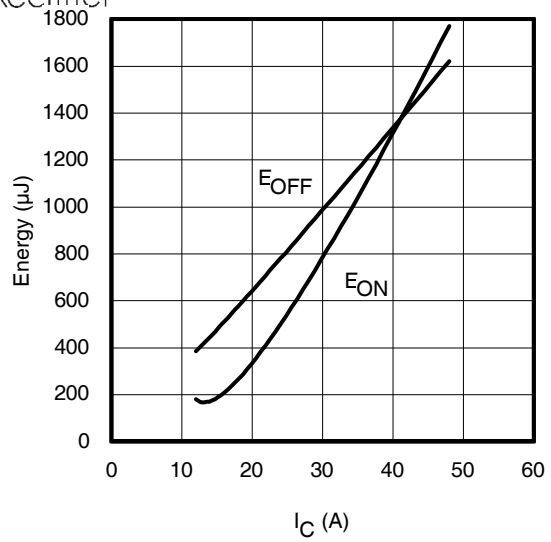

Fig. 13 - Typ. Energy Loss vs. I_C
T_J = 175°C; L = 200µH; V_{CE} = 400V, R_G = 10Ω; V_{GE} = 15V

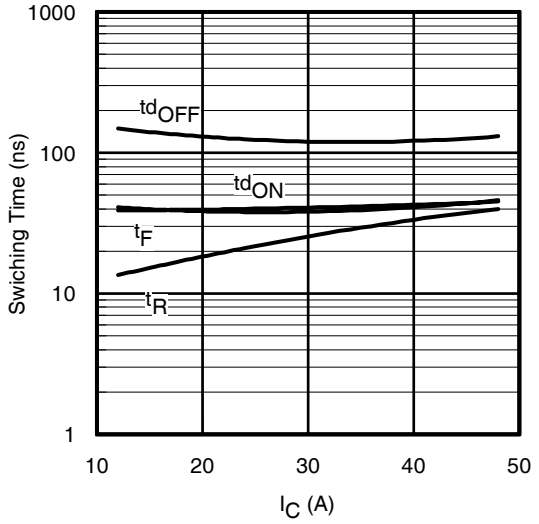

Fig. 14 - Typ. Switching Time vs. I_C
T_J = 175°C; L = 200µH; V_{CE} = 400V, R_G = 10Ω; V_{GE} = 15V

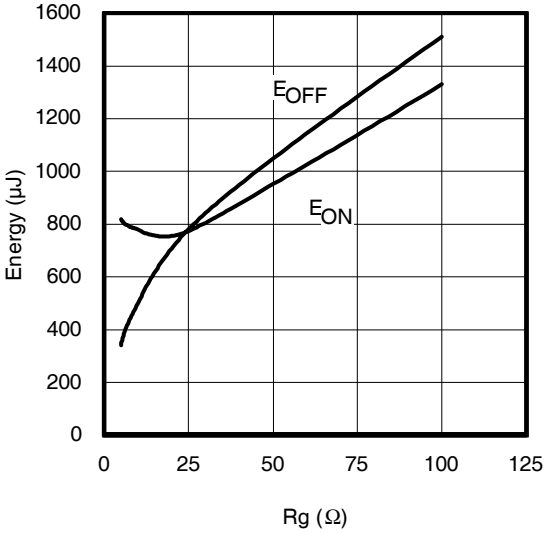

Fig. 15 - Typ. Energy Loss vs. R_G
T_J = 175°C; L = 200µH; V_{CE} = 400V, I_{CE} = 24A; V_{GE} = 15V

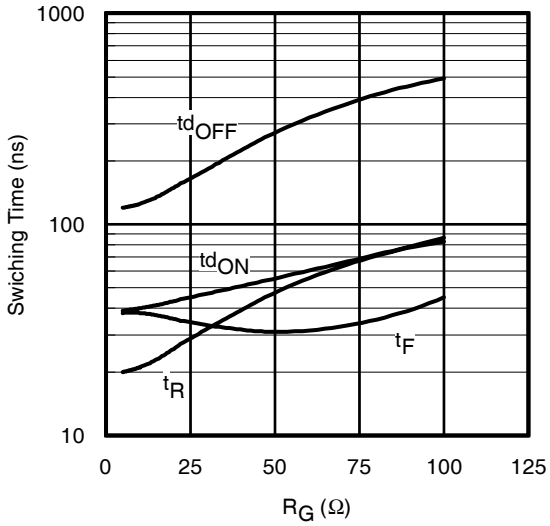

Fig. 16 - Typ. Switching Time vs. R_G
T_J = 175°C; L = 200µH; V_{CE} = 400V, I_{CE} = 24A; V_{GE} = 15V

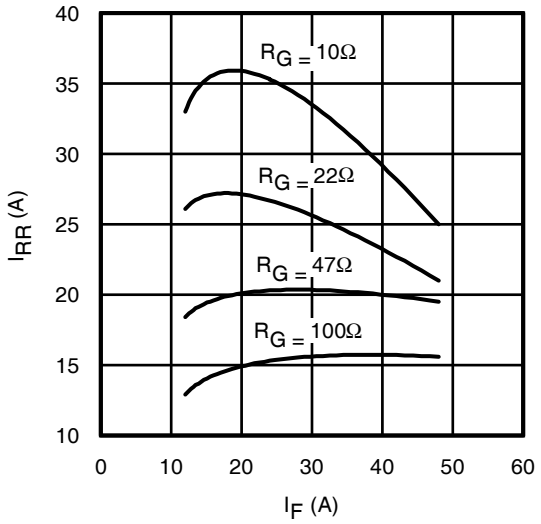

Fig. 17 - Typ. Diode I_{RR} vs. I_F
T_J = 175°C

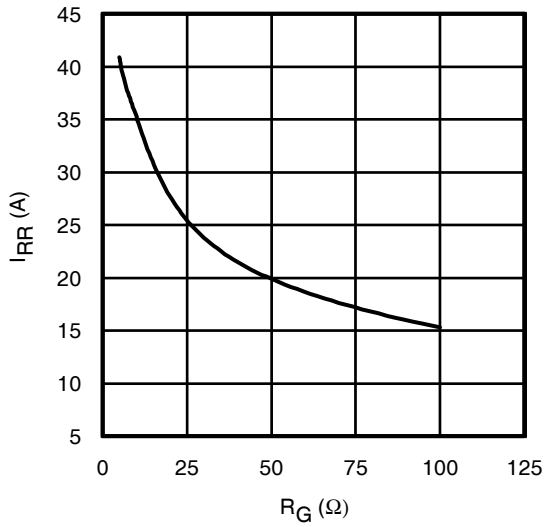

Fig. 18 - Typ. Diode I_{RR} vs. R_G
T_J = 175°C

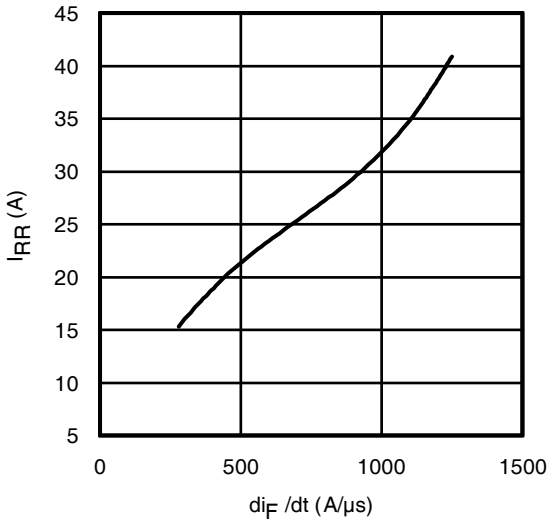

Fig. 19 - Typ. Diode I_{RR} vs. di_F/dt
V_{CC} = 400V; V_{GE} = 15V; I_F = 24A; T_J = 175°C

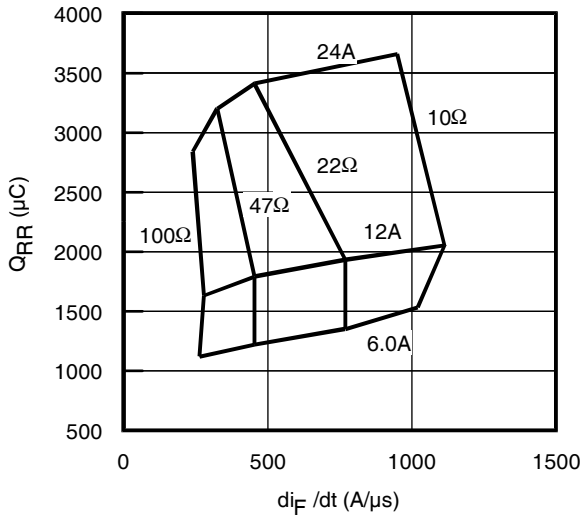

Fig. 20 - Typ. Diode Q_{RR} vs. di_F/dt
V_{CC} = 400V; V_{GE} = 15V; T_J = 175°C

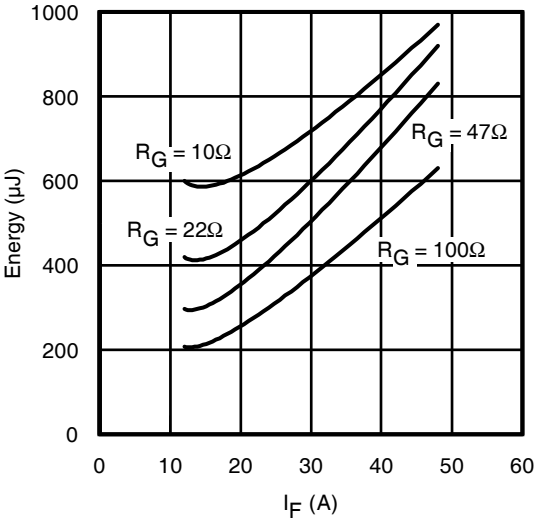

Fig. 21 - Typ. Diode E_{RR} vs. I_F
T_J = 175°C

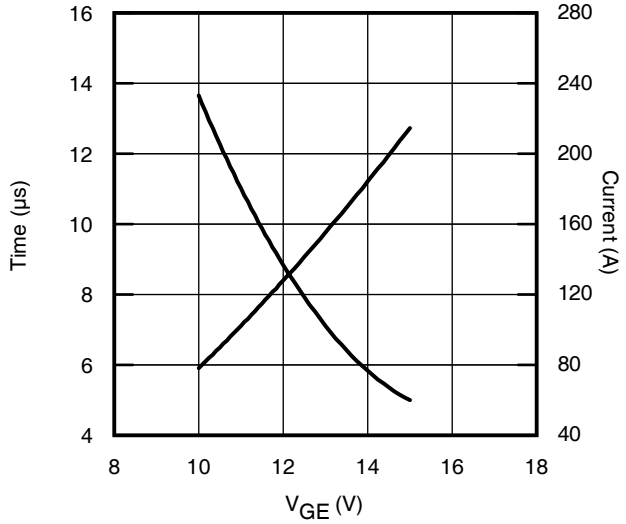

Fig. 22 - V_{GE} vs. Short Circuit Time
V_{CC} = 400V; T_C = 25°C

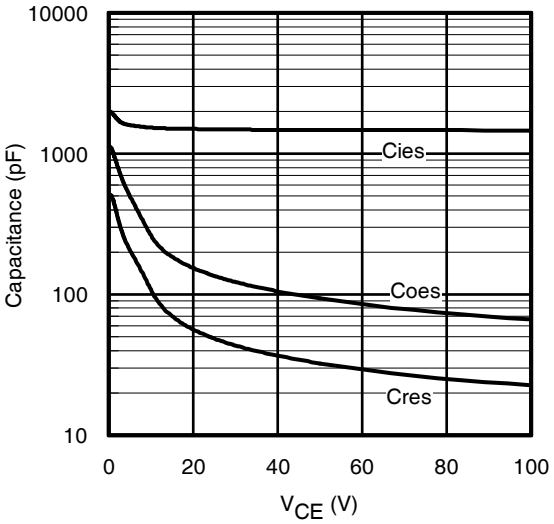

Fig. 23 - Typ. Capacitance vs. V_{CE}
V_{GE}= 0V; f = 1MHz

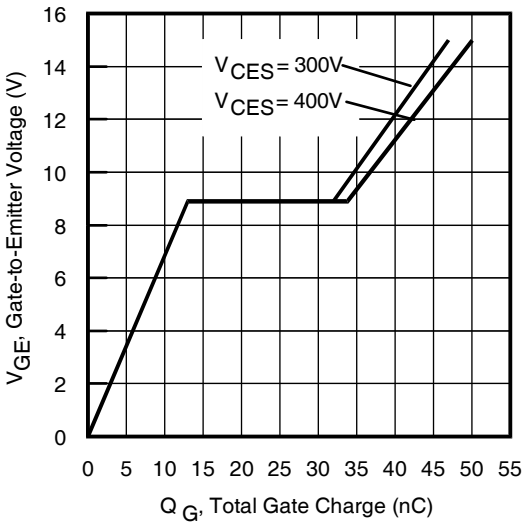

Fig. 24 - Typical Gate Charge vs. V_{GE}
I_{CE} = 24A; L = 600µH

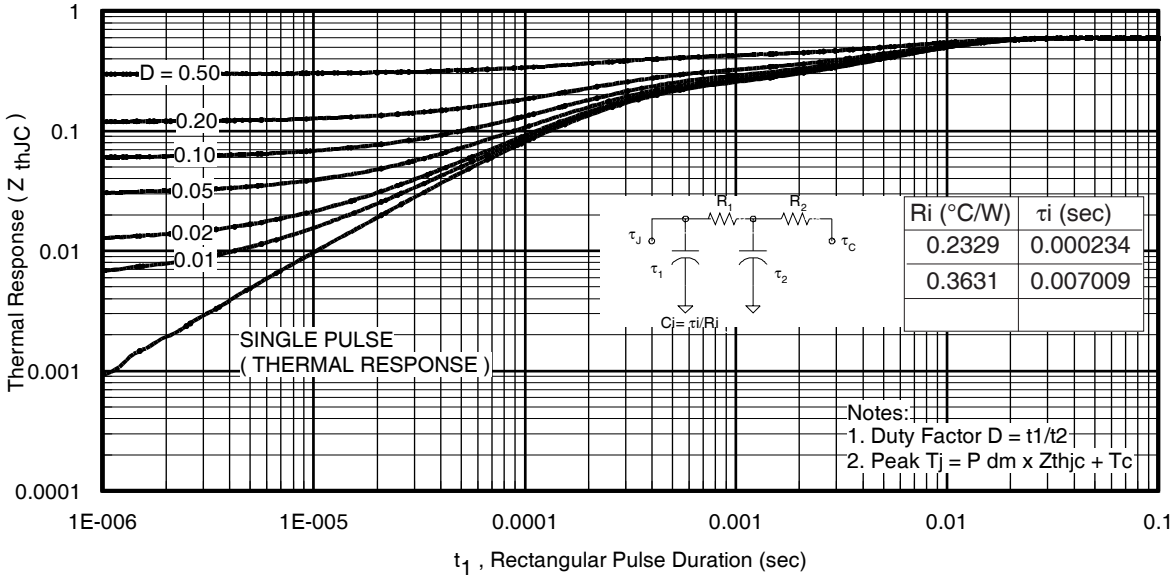

Fig 23. Maximum Transient Thermal Impedance, Junction-to-Case (IGBT) TO-220AB

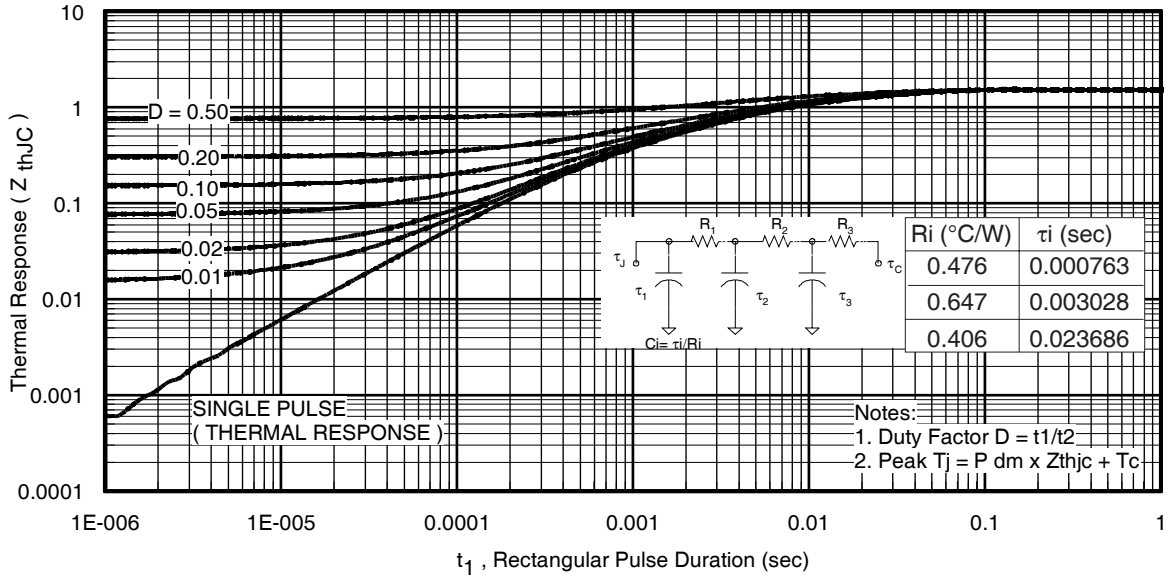

Fig. 24. Maximum Transient Thermal Impedance, Junction-to-Case (DIODE) TO-220AB

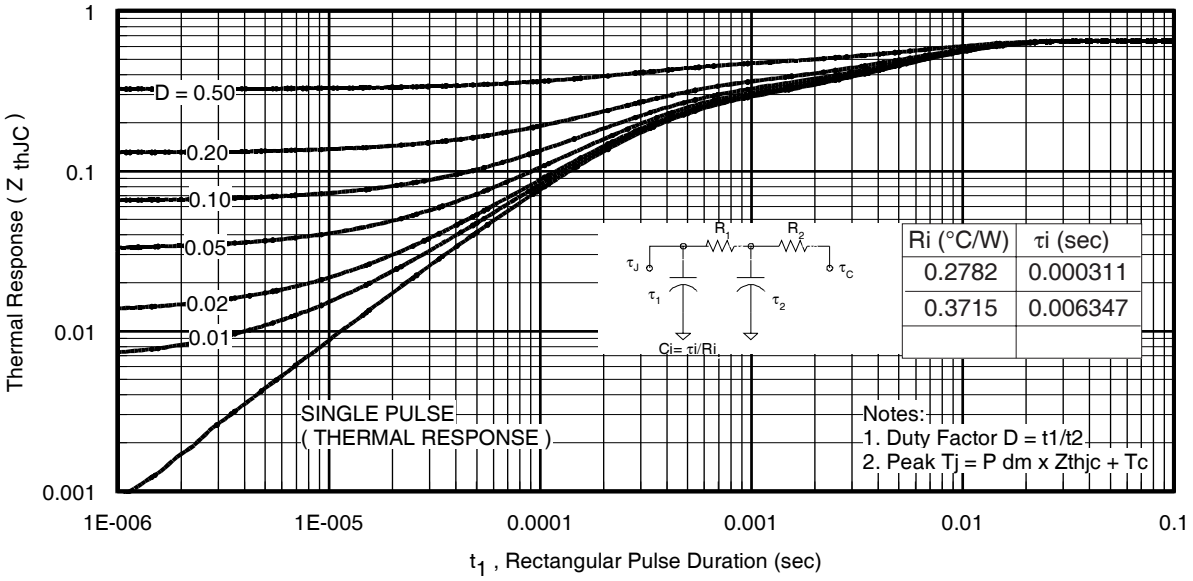

Fig 23. Maximum Transient Thermal Impedance, Junction-to-Case (IGBT) TO-247AC

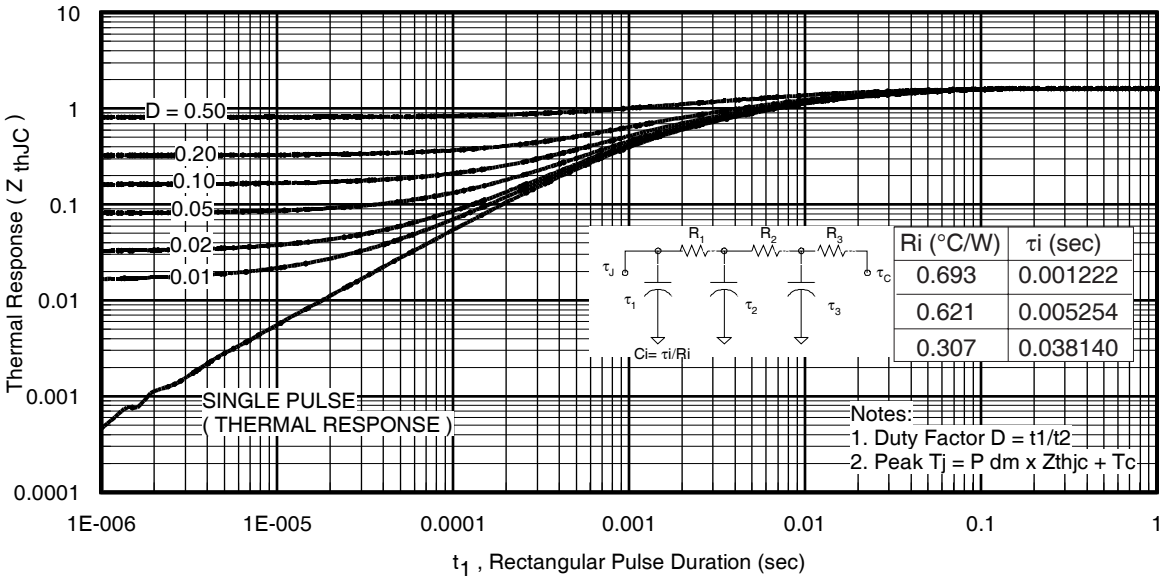

Fig. 24. Maximum Transient Thermal Impedance, Junction-to-Case (DIODE) TO-247AC

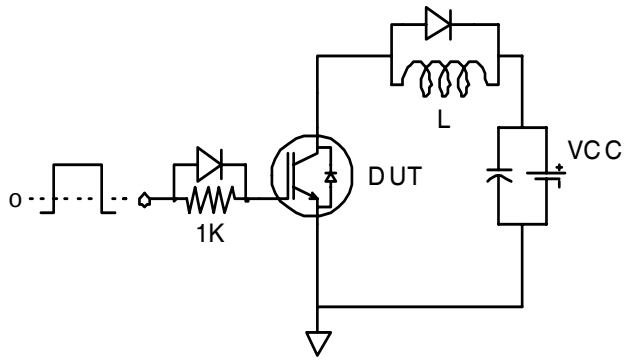

Fig.C.T.1 - Gate Charge Circuit (turn-off)

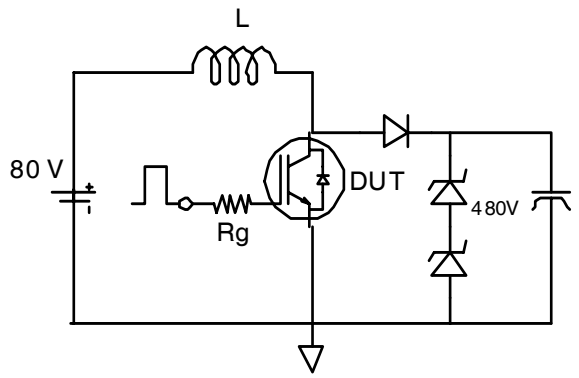

Fig.C.T.2 - RBSOA Circuit

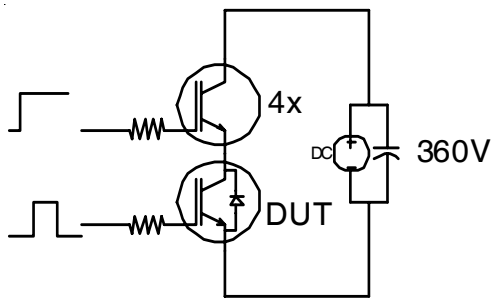

Fig.C.T.3 - S.C. SOA Circuit

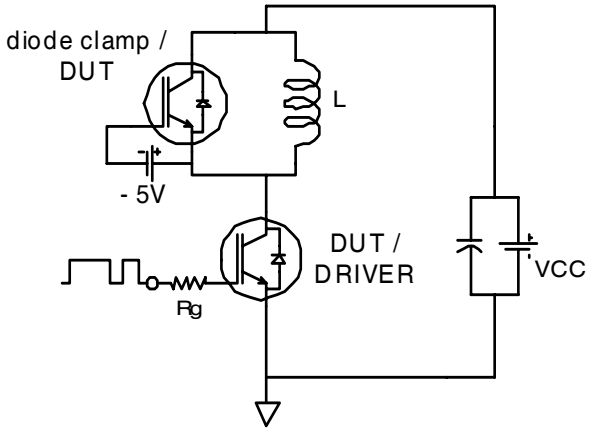

Fig.C.T.4 - Switching Loss Circuit

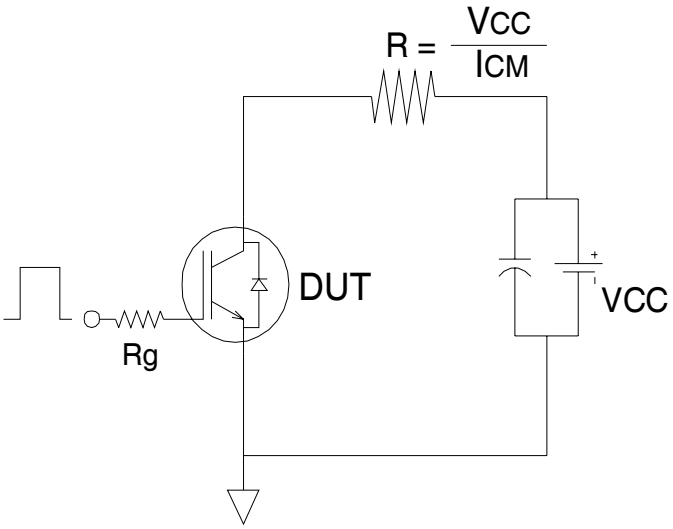

Fig.C.T.5 - Resistive Load Circuit

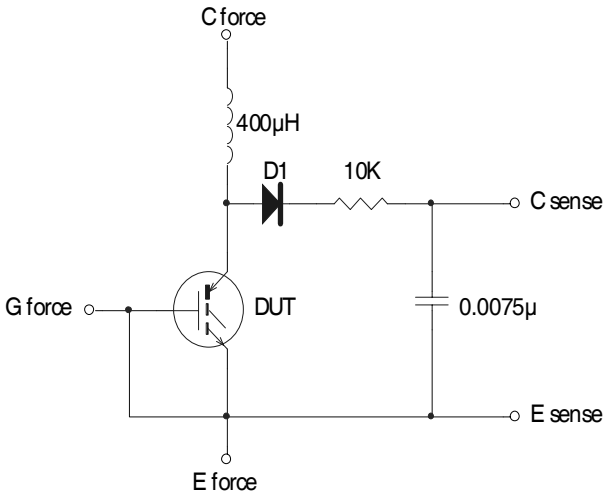

Fig.C.T.6 - BVCES Filter Circuit

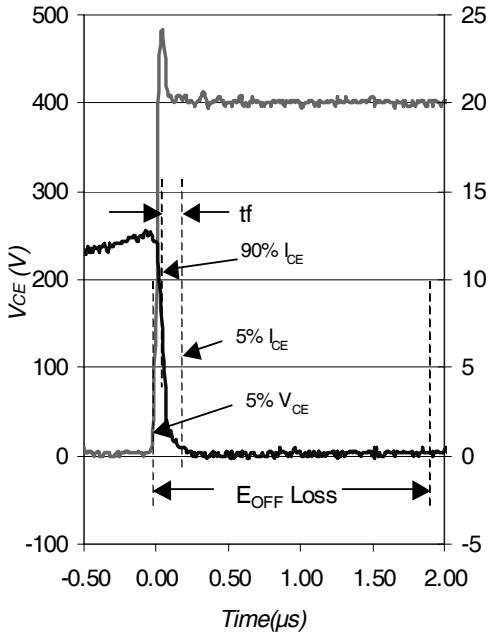

Fig. WF1 - Typ. Turn-off Loss Waveform
@ T_J = 175°C using Fig. CT.4

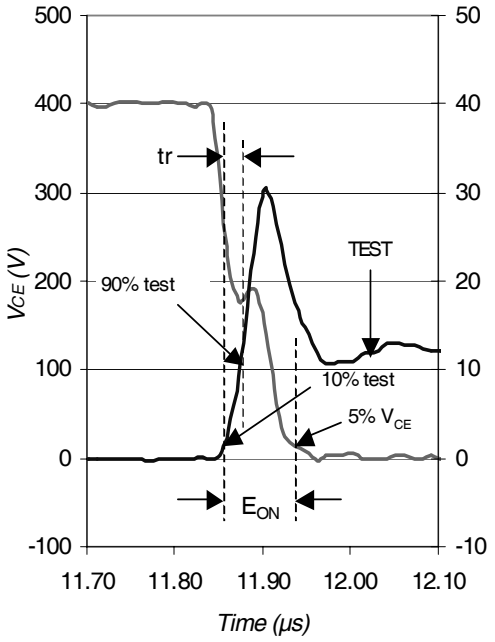

Fig. WF2 - Typ. Turn-on Loss Waveform
@ T_J = 175°C using Fig. CT.4

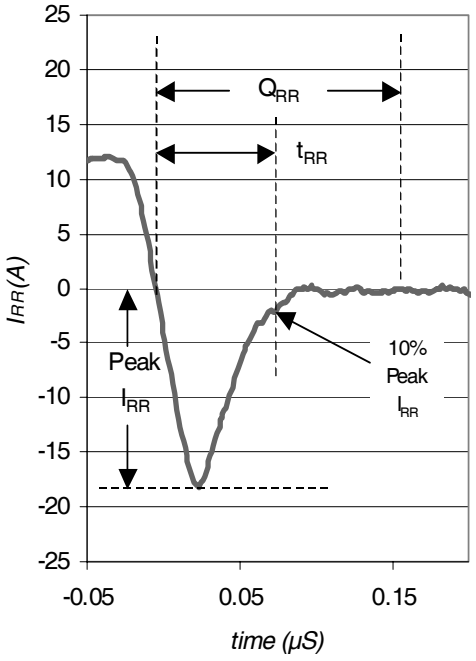

Fig. WF3 - Typ. Diode Recovery Waveform
@ T_J = 175°C using Fig. CT.4

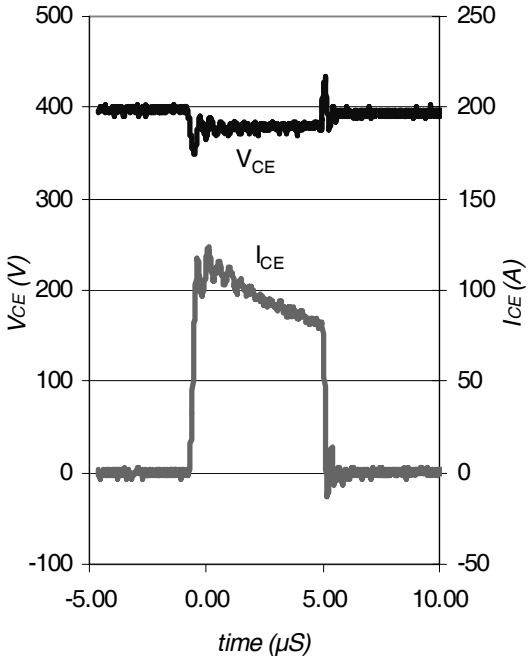

Fig. WF4 - Typ. S.C. Waveform
@ T_J = 25°C using Fig. CT.3

TO-220AB Package Outline

Dimensions are shown in millimeters (inches)

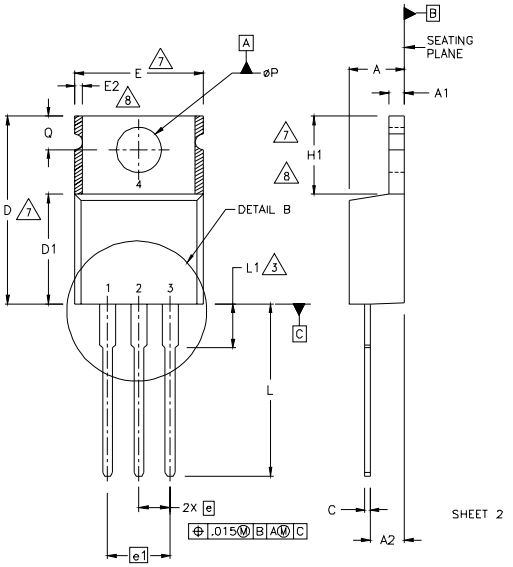

NOTES:

1 DIMENSIONING AND TOLERANCING PER ASME Y14.5 M- 1994.
2 DIMENSIONS ARE SHOWN IN INCHES [MILLIMETERS].
3 LEAD DIMENSION AND FINISH UNCONTROLLED IN L1.
4 DIMENSION D & E DO NOT INCLUDE MOLD FLASH. MOLD FLASH SHALL NOT EXCEED .005" (0.127) PER SIDE. THESE DIMENSIONS ARE MEASURED AT THE OUTERMOST EXTREMES OF THE PLASTIC BODY.
5 DIMENSION b1 & c1 APPLY TO BASE METAL ONLY.
6 CONTROLLING DIMENSION : INCHES.
7 THERMAL PAD CONTOUR OPTIONAL WITHIN DIMENSIONS E,H1,D2 & E1
8 DIMENSION E2 X H1 DEFINE A ZONE WHERE STAMPING AND SINGULATION IRREGULARITIES ARE ALLOWED.

LEAD ASSIGNMENTS

HEXFET
1.- GATE
2.- DRAIN
3.- SOURCE

IGBTs, CoPACK
1.- GATE
2.- COLLECTOR
3.- EMITTER

DIODES
1.- ANODE/OPEN
2.- CATHODE
3.- ANODE

SYMBOL	DIMENSIONS				NOTES
	MILLIMETERS		INCHES		
	MIN.	MAX.	MIN.	MAX.	
A	3.56	4.82	.140	.190	
A1	0.51	1.40	.020	.055	
A2	2.04	2.92	.080	.115	
b	0.38	1.01	.015	.040	
b1	0.38	0.96	.015	.038	5
b2	1.15	1.77	.045	.070	
b3	1.15	1.73	.045	.068	
c	0.36	0.61	.014	.024	
c1	0.36	0.56	.014	.022	5
D	14.22	16.51	.560	.650	4
D1	8.38	9.02	.330	.355	
D2	12.19	12.88	.480	.507	7
E	9.66	10.66	.380	.420	4,7
E1	8.38	8.89	.330	.350	7
e	2.54 BSC		.100 BSC		
e1	5.08		.200 BSC		
H1	5.85	6.55	.230	.270	7,8
L	12.70	14.73	.500	.580	
L1	–	6.35	–	.250	3
øP	3.54	4.08	.139	.161	
Q	2.54	3.42	.100	.135	
ø	90°-93°		90°-93°		

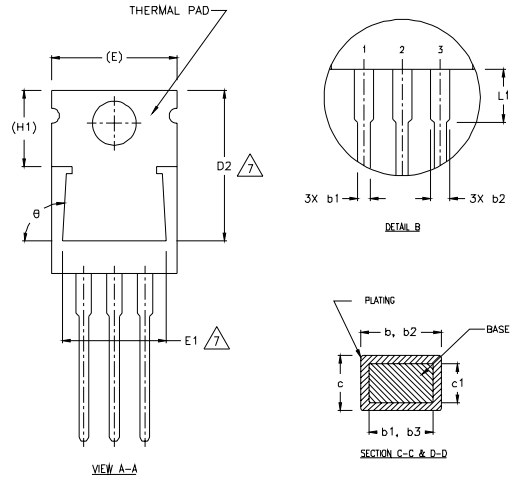

TO-220AB Part Marking Information

EXAMPLE: THIS IS AN IRF1010
LOT CODE 1789
ASSEMBLED ON WW 19, 2000
IN THE ASSEMBLY LINE "C"

Note: "P" in assembly line position indicates "Lead - Free"

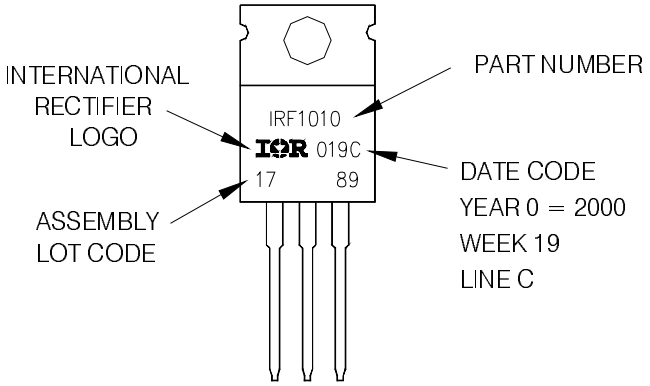

TO-220AB package is not recommended for Surface Mount Application.

TO-247AC Package Outline

Dimensions are shown in millimeters (inches)

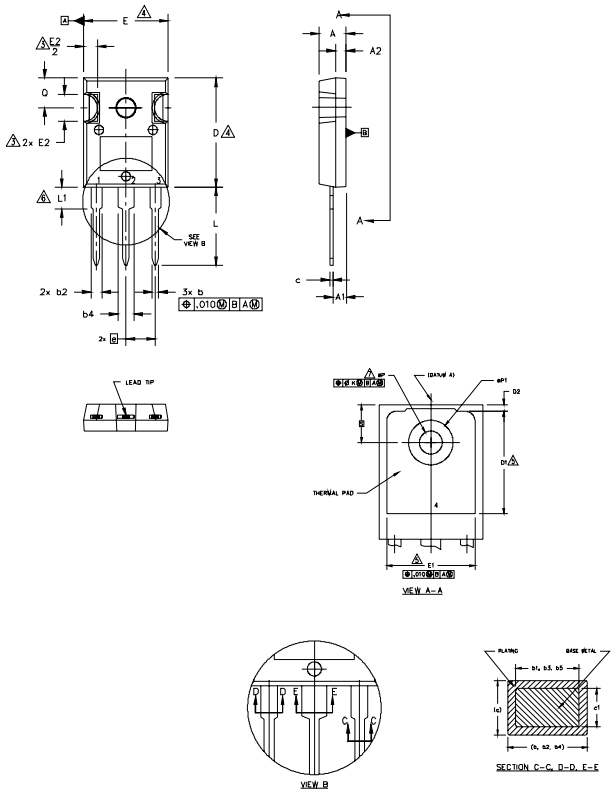

NOTES:

1. DIMENSIONING AND TOLERANCING AS PER ASME Y14.5M 1994.
2. DIMENSIONS ARE SHOWN IN INCHES.
3. CONTOUR OF SLOT OPTIONAL.
4. DIMENSION D & E DO NOT INCLUDE MOLD FLASH. MOLD FLASH SHALL NOT EXCEED .005" (0.127) PER SIDE. THESE DIMENSIONS ARE MEASURED AT THE OUTERMOST EXTREMES OF THE PLASTIC BODY.
5. THERMAL PAD CONTOUR OPTIONAL WITHIN DIMENSIONS D1 & E1.
6. LEAD FINISH UNCONTROLLED IN L1.
7. øP TO HAVE A MAXIMUM DRAFT ANGLE OF 1.5 ° TO THE TOP OF THE PART WITH A MAXIMUM HOLE DIAMETER OF .154 INCH.
8. OUTLINE CONFORMS TO JEDEC OUTLINE TO-247AC .

SYMBOL	DIMENSIONS				NOTES
	INCHES		MILLIMETERS		
	MIN.	MAX.	MIN.	MAX.	
A	.183	.209	4.65	5.31	
A1	.087	.102	2.21	2.59	
A2	.059	.098	1.50	2.49	
b	.039	.055	0.99	1.40	
b1	.039	.053	0.99	1.35	
b2	.065	.094	1.65	2.39	
b3	.065	.092	1.65	2.34	
b4	.102	.135	2.59	3.43	
b5	.102	.133	2.59	3.38	
c	.015	.035	0.38	0.89	
c1	.015	.033	0.38	0.84	
D	.776	.815	19.71	20.70	4
D1	.515	–	13.08	–	5
D2	.020	.053	0.51	1.35	
E	.602	.625	15.29	15.87	4
E1	.530	–	13.46	–	
E2	.178	.216	4.52	5.49	
e	.215 BSC		5.46 BSC		
øk	.010		0.25		
L	.559	.634	14.20	16.10	
L1	.146	.169	3.71	4.29	
øP	.140	.144	3.56	3.66	
øP1	–	.291	–	7.39	
Q	.209	.224	5.31	5.69	
S	.217 BSC		5.51 BSC		

LEAD ASSIGNMENTS

HEXFET

1.– GATE
2.– DRAIN
3.– SOURCE
4.– DRAIN

IGBTs, CoPACK

1.– GATE
2.– COLLECTOR
3.– EMITTER
4.– COLLECTOR

DIODES

1.– ANODE/OPEN
2.– CATHODE
3.– ANODE

TO-247AC Part Marking Information

EXAMPLE: THIS IS AN IRFPE30
WITH ASSEMBLY
LOT CODE 5657
ASSEMBLED ON WW 35, 2001
IN THE ASSEMBLY LINE "H"

Note: "P" in assembly line position indicates "Lead-Free"

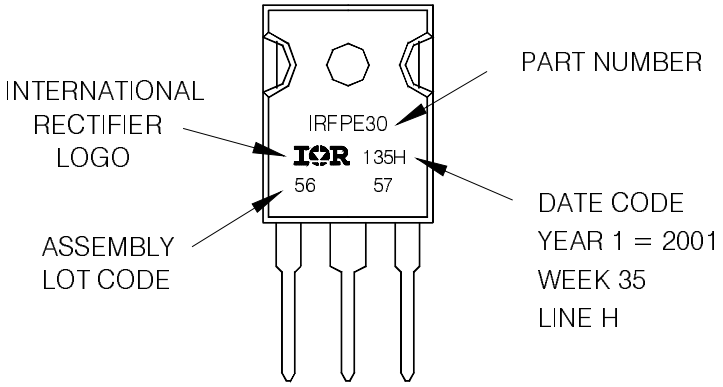

TO-247AC package is not recommended for Surface Mount Application.

Data and specifications subject to change without notice.
This product has been designed and qualified for Industrial market.
Qualification Standards can be found on IR's Web site.

International
IOR Rectifier

IR WORLD HEADQUARTERS: 233 Kansas St., El Segundo, California 90245, USA Tel: (310) 252-7105
TAC Fax: (310) 252-7903
Visit us at www.irf.com for sales contact information. 02/06