| REV. | ECN NO. | DATE | SIGN | DESCRIPTION |
|---|---|---|---|---|
| | | | | |
| | | | | |
| | | | | |

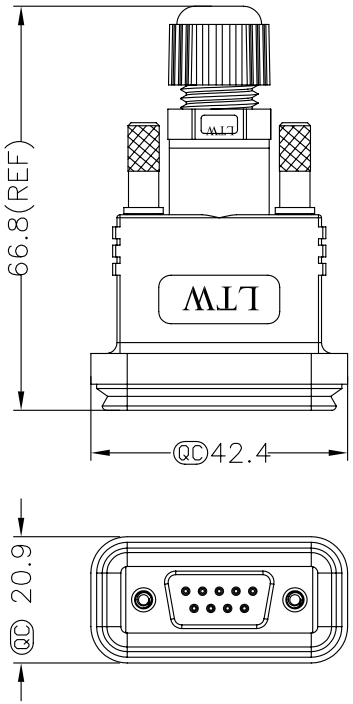


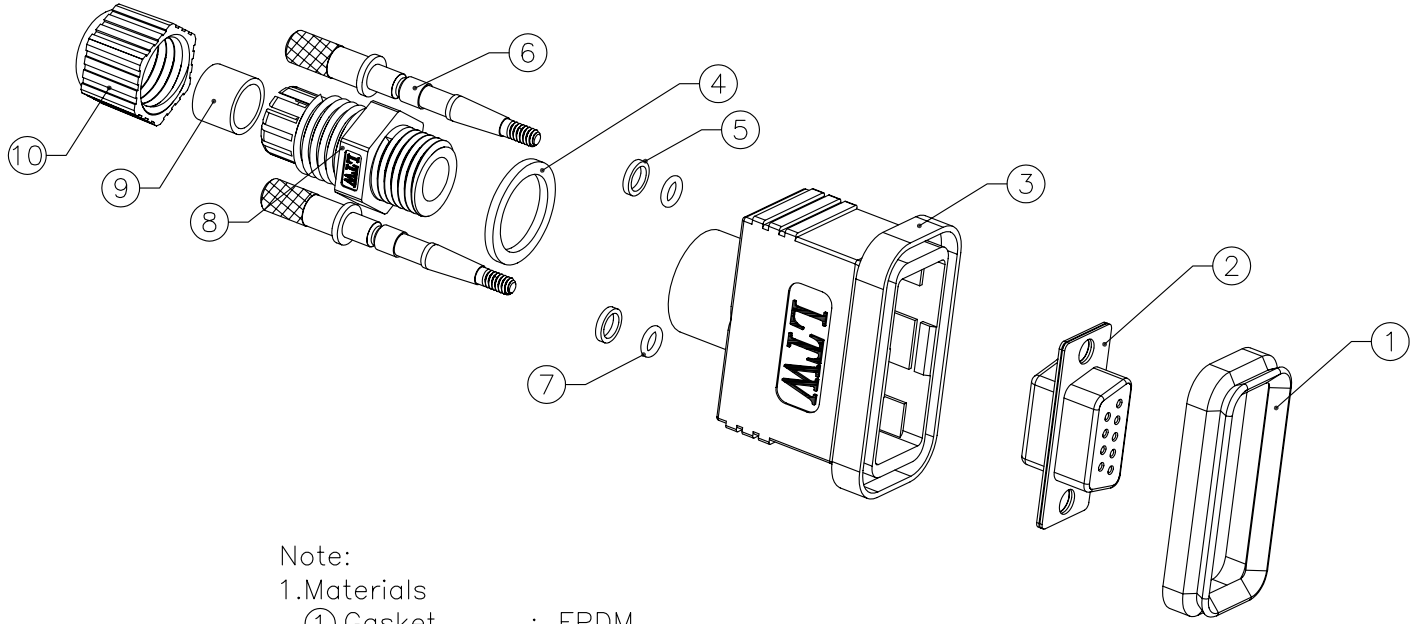


Note:

1.Materials

| | | |
|---|---|---|
| ① Gasket | : | EPDM |
| ② Connector | : | D-SUB 9Pin, Pin: Brass,Gold Flash |
| ③ Housing | : | ABS,UL94V-0 |
| ④⑤Gasket | : | EPDM |
| ⑥ Screw | : | Brass,Nickel Plated |
| ⑦ O-Ring | : | Silicone |
| ⑧ Body | : | Nylon |
| ⑨ Seals | : | EPDM |
| ⑩ Sealing Nut | : | Nylon |

2.Seals For Cable OD:ø3.5mm~ø7.0mm

3. QC Important Dimension.

⚠ Warning! Drawings & Specifications Are Subject To Change Without Notification

| LTWSDB-09BFFA-SL7001 | LTWSDB-09BMMA-SL7001 |
|---|---|
| Pin1 Pin6 Pin5 Pin9 | Pin6 Pin1 Pin9 Pin5 |
| Pin Assignments Front View | |

| | | | | |
|---|---|---|---|---|
| UNIT : mm | TITLE D-SUB 9Pin Assembly Type | LTW 亮泰企業股份有限公司 | ITEM NO | DRAWN BY Ju Xiao Fang / DATE 2004/07/27 |
| TOLERANCE ±0.5mm | SCALE Free / SHEET 1 OF 1 | | DWG NO LTWSDB-09BXXA-SL7001 | CHECKED BY / DATE |
| | REV. A / SIZE A4 / QC :Inspection Item | | CUSTOMER | APPROVED BY / DATE |

THIS INFORMATION IS CONFIDENTIAL AND IS DISCLOSED TO YOU ON CONDITION THAT NO FURTHER DISCLOSURE IS MADE BY YOU TO OTHER THAN LTW PERSONNEL WITHOUT WRITTEN AUTHORIZATION FROM LTW CORP.