UNCONTROLLED DOCUMENT

PART NUMBER	SML-LXL1106GC-TR	REV.	B
DATE	E.C.N. NUMBER AND REVISION COMMENTS		REV.
03.14.03	E.C.N. #10967.		A
05.26.10	E.C.N. #11508.		B

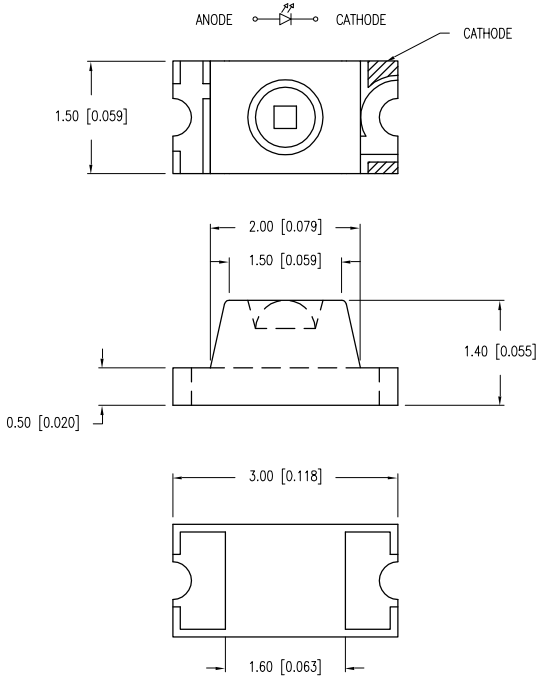

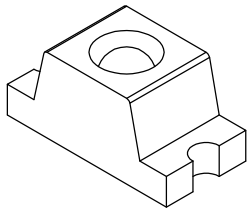

ELECTRO-OPTICAL CHARACTERISTICS $T_A = 25°C$ $I_f = 20mA$

PARAMETER	MIN	TYP	MAX	UNITS	TEST COND
PEAK WAVELENGTH		565		nm	
FORWARD VOLTAGE		2.2	2.5	V_f	
REVERSE VOLTAGE	5.0			V_r	$I_r = 100\mu A$
AXIAL INTENSITY		16		mcd	$I_f = 20mA$
VIEWING ANGLE		90		2x theta	
EMITTED COLOR:	GREEN				
EPOXY LENS FINISH:	WATER CLEAR				

LIMITS OF SAFE OPERATION AT 25°C

PARAMETER	MAX	UNITS
PEAK FORWARD CURRENT*	150	mA
STEADY CURRENT	25	mA
POWER DISSIPATION	105	mW
DERATE FROM 25°C	− 1.2	mW/°C
OPERATING TEMP.	−30 TO +85	°C
STORAGE TEMP.	−40 TO +85	°C

* t<10µS

B A

CAUTION: MOISTURE SENSITIVE DEVICE
PER JEDEC LEVEL 3 STANDARDS

CAUTION: STATIC SENSITIVE DEVICE
FOLLOW PROPER E.S.D. HANDLING PROCEDURES
WHEN WORKING WITH THIS PART.

NOTES:

1. THE POLARITY MARK IS ORIENTED TOWARDS THE TAPE SPROCKET HOLE.

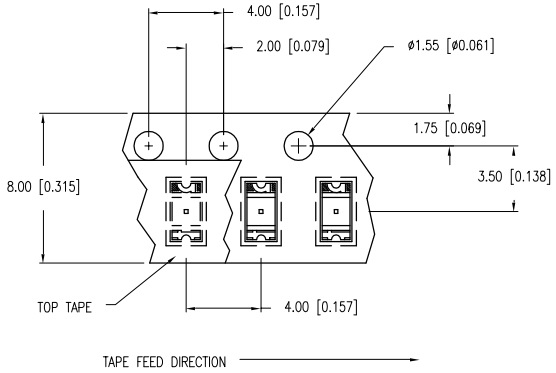

RECOMMENDED SOLDER PAD LAYOUT

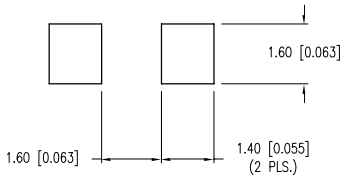

LEAD FREE REFLOW PROFILE

10 SEC. MAX.

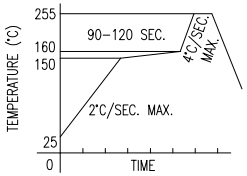

TOTAL TIME ABOVE 220°C IS 60 SECONDS MAX.

*UNLESS OTHERWISE SPECIFIED TOLERANCES PER DECIMAL PRECISION ARE: X=±1 (±0.039), X.X=±0.5 (±0.020), X.XX=±0.25 (±0.010), X.XXX=±0.127 (±0.005). LEAD SIZE=±0.05 (±0.002), LEAD LENGTH=±0.75 (±0.030). MIN= +DECIMAL PRECISION −0.00 MAX.= +0.00 −DECIMAL PRECISION

UNCONTROLLED DOCUMENT

LUMEX®
Creating LED and LCD Solutions Together™
290 E. HELEN ROAD
PALATINE, IL 60067-6976
PHONE: +1.847.359.2790
FAX: +1.847.359.6538
WEB: WWW.LUMEX.COM

3mm x 1.5mm SURFACE MOUNT LED WITH LENS, 565nm GREEN LED, WATER CLEAR LENS, TAPE AND REEL.

THE SPECIFICATIONS MAY CHANGE AT ANY TIME WITHOUT NOTICE DUE TO NEW MATERIALS OR PRODUCT IMPROVEMENT.

CONFIDENTIAL INFORMATION
THE INFORMATION CONTAINED IN THIS DOCUMENT IS THE PROPERTY OF LUMEX INC. EXCEPT AS SPECIFICALLY AUTHORIZED IN WRITING BY LUMEX INC., THE HOLDER OF THIS DOCUMENT SHALL KEEP ALL INFORMATION CONTAINED HEREIN CONFIDENTIAL AND SHALL PROTECT SAME IN WHOLE OR IN PART FROM DISCLOSURE AND DISSEMINATION TO ALL THIRD PARTIES.

DATE:	08.21.01	DRAWN BY:	CT
PAGE:	1 OF 1	CHKD BY:	KF
SCALE:	N/A	APRVD BY:	SS
UNIT:	mm [INCH]	Pb	