19-2041; Rev 1; 8/01

Voltage Detectors in 4-Bump (2 x 2) Chip-Scale Package

MAX6406–MAX6411

General Description

The MAX6406–MAX6411 is a family of ultra-low power circuits used for monitoring battery, power-supply, and regulated system voltages. Each detector contains a precision bandgap reference comparator and is trimmed to specified trip threshold voltages. These devices provide excellent circuit reliability and low cost by eliminating external components and adjustments when monitoring system voltages from 2.5V to 5.0V. A manual reset input is also included.

The MAX6406–MAX6411 assert a signal whenever the V_{CC} supply voltage falls below a preset threshold. These devices are differentiated by their output logic configurations and preset threshold voltages. The MAX6406/MAX6409 (push-pull) and the MAX6408/MAX6411 (open-drain) have an active-low output ($\overline{OUT}$ is logic low when V_{CC} is below V_{TH}). The MAX6407/MAX6410 have an active-high push-pull output (OUT is logic high when V_{CC} is below V_{TH}). All parts are guaranteed to be in the correct output logic state for V_{CC} down to 1V. The detector is designed to ignore fast transients on V_{CC}. The MAX6406/MAX6407/MAX6408 have voltage thresholds between 2.20V and 3.08V in approximately 100mV increments. The MAX6409/MAX6410/MAX6411 have voltage thresholds between 3.30V and 4.63V in approximately 100mV increments.

Ultra-low supply current of 500nA (MAX6406/MAX6407/MAX6408) makes these parts ideal for use in portable equipment. These devices are available in 4-bump chip-scale packages (UCSP™).

Applications

Portable/Battery-Powered Equipment

Cell Phones

PDAs

MP3 Players

Pagers

Selector Guide

PART	NOMINAL V_{TH} (V)	OUT/$\overline{OUT}$ Output Type
MAX6406	2.20 to 3.08	Push-Pull, Active-Low
MAX6407	2.20 to 3.08	Push-Pull, Active-High
MAX6408	2.20 to 3.08	Open-Drain, Active-Low
MAX6409	3.30 to 4.63	Push-Pull, Active-Low
MAX6410	3.30 to 4.63	Push-Pull, Active-High
MAX6411	3.30 to 4.63	Open-Drain, Active-Low

Features

- **Tiny 4-Bump (2 x 2) Chip-Scale Package, (Package Pending Full Qualification—Expected Completion Date 6/30/01. See *UCSP Reliability* Section for More Details.)**
- **70% Smaller Than SC70 Packages**
- **Ultra-Low 500nA Supply Current (MAX6406/MAX6407/MAX6408)**
- **Factory-Trimmed Reset Thresholds from 2.20V to 4.63V in Approximately 100mV Increments**
- **±2.5% Threshold Accuracy (-40°C to +85°C)**
- **Manual Reset Input**
- **Guaranteed OUT Valid to V_{CC} = 1.0V**
- **Three Reset Output Logic Options: Active-Low Push-Pull, Active-High Push-Pull, and Active-Low Open-Drain**
- **Immune to Short V_{CC} Transients**
- **No External Components**

Ordering Information

PART	TEMP. RANGE	PIN-PACKAGE
MAX6406BS_ _-T	-40°C to +85°C	UCSP-4
MAX6407BS_ _-T	-40°C to +85°C	UCSP-4
MAX6408BS_ _-T	-40°C to +85°C	UCSP-4
MAX6409BS_ _-T	-40°C to +85°C	UCSP-4
MAX6410BS_ _-T	-40°C to +85°C	UCSP-4
MAX6411BS_ _-T	-40°C to +85°C	UCSP-4

The MAX6406–MAX6411 are available in factory-set V_{CC} detector thresholds from 2.20V to 4.63V, in approximately 0.1V increments. Choose the desired threshold suffix from Table 1 and insert it in the blank space following "S". There are 21 standard versions with a required order increment of 2500 pieces. Sample stock is generally held on the standard versions only (Table1). Required order increment is 10,000 pieces for nonstandard versions (Table 2). Contact factory for availability. All devices available in tape-and-reel only.

UCSP reliability is integrally linked to the user's assembly methods, circuit board material, and environment. Refer to the UCSP Reliability Notice in the UCSP Reliability section of this data sheet for more information.

Pin Configuration appears at end of data sheet.

UCSP is a trademark of Maxim Integrated Products, Inc.

For pricing, delivery, and ordering information, please contact Maxim/Dallas Direct! at 1-888-629-4642, or visit Maxim's website at www.maxim-ic.com.

Voltage Detectors in 4-Bump (2 x 2) Chip-Scale Package

ABSOLUTE MAXIMUM RATINGS

All voltages measured to GND unless otherwise noted.
VCC .....-0.3V to +6V
OUT/$\overline{OUT}$ .....-0.3V to (V_{CC} + 0.3V)
$\overline{OUT}$ (open-drain) .....-0.3V to +6V
$\overline{MR}$ .....-0.3V to (V_{CC} + 0.3V)
Input/Output Current into Any Pin 20mA

Continuous Power Dissipation (T_A = +70°C)
4-Pin/Bump UCSP (derate 3.8mW/°C above +70°C)....303mW
Operating Temperature Range .....-40°C to +85°C
Junction Temperature.....+150°C
Storage Temperature Range .....-65°C to +160°C
Bump Reflow Temperature .....+235°C

Stresses beyond those listed under "Absolute Maximum Ratings" may cause permanent damage to the device. These are stress ratings only, and functional operation of the device at these or any other conditions beyond those indicated in the operational sections of the specifications is not implied. Exposure to absolute maximum rating conditions for extended periods may affect device reliability.

ELECTRICAL CHARACTERISTICS

(V_{CC} = 1.0V to 5.5V, T_A = -40°C to +85°C, unless otherwise noted. Typical values are at V_{CC} = 3V and T_A = +25°C.) (Note1)

PARAMETER	SYMBOL	CONDITIONS		MIN	TYP	MAX	UNITS
Supply Voltage Range	V_{CC}	T_A = 0°C to +70°C		1.0		5.5	V
		T_A = -40°C to +85°C		1.2		5.5	
Supply Current	I_{CC}	MAX6406/MAX6407/MAX6408 V_{CC} = 3.0V for V_{TH} ≤ 2.93V, V_{CC} = 3.2V for V_{TH} > 2.93V, no load			0.5	1.0	µA
		V_{CC} = 5.5V, no load			1.0	1.75	
Detector Threshold	V_{TH}	Table 1	T_A = +25°C	V_{TH} - 1.5%	V_{TH}	V_{TH} + 1.5%	V
			T_A = -40°C to +85°C	V_{TH} - 2.5%	V_{TH}	V_{TH} + 2.5%	
Voltage Threshold Hysteresis		MAX6406/MAX6407/MAX6408			6.3		mV
		MAX6409/MAX6410/MAX6411			9.5		
Detector Threshold Tempco	ΔV_{TH}/°C				40		ppm/°C
$\overline{MR}$ Input	V_{IL}	V_{TH} > 4.0V				0.8	V
	V_{IH}			2.0			
	V_{IL}	V_{TH} ≤ 4.0V				0.2 x V_{CC}	
	V_{IH}			0.7 x V_{CC}			
$\overline{MR}$ Minimum Input Pulse Width	t_{MD}			1			µs
$\overline{MR}$ Glitch Rejection					100		ns
$\overline{MR}$ to OUT/$\overline{OUT}$ Delay					200		ns
$\overline{MR}$ Pullup Resistance				25	50	75	kΩ
Propagation Delay		V_{CC} = (V_{TH} + 100mV) to (V_{TH} - 100mV)			20		µs
		V_{CC} = (V_{TH} - 100mV) to (V_{TH} + 100mV)			42		
Startup Time		V_{CC} = 0 to V_{TH} (min)			88		µs
$\overline{OUT}$ Output Voltage Low (MAX6406/MAX6408/MAX6409/ MAX6411)	V_{OL}	I_{SINK} = 1.6mA, V_{CC} ≥ 2.1V, $\overline{OUT}$ asserted				0.3	V
		I_{SINK} = 100µA, V_{CC} ≥ 1.2V, $\overline{OUT}$ asserted				0.4	
$\overline{OUT}$ Output Voltage High (MAX6406/MAX6409)	V_{OH}	I_{SOURCE} = 500µA, V_{CC} = 3.2V, MAX6406, $\overline{OUT}$ not asserted		0.8 x V_{CC}			V
		I_{SOURCE} = 800µA, V_{CC} = 4.5V, V_{TH} ≤ 4.38V, $\overline{OUT}$ not asserted		0.8 x V_{CC}			
		I_{SOURCE} = 800µA, V_{CC} = V_{TH} (max), V_{TH} ≥ 4.5V, $\overline{OUT}$ not asserted		0.8 x V_{CC}			

ELECTRICAL CHARACTERISTICS (continued)

(V_{CC} = 1.0V to 5.5V, T_A = -40°C to +85°C, unless otherwise noted. Typical values are at V_{CC} = 3V and T_A = +25°C.) (Note1)

PARAMETER	SYMBOL	CONDITIONS	MIN	TYP	MAX	UNITS
OUT Output Voltage (MAX6407/MAX6410)	V_{OH}	I_{SOURCE} = 500µA, V_{CC} ≥ 2.1V, OUT asserted	0.8 x V_{CC}			V
		I_{SOURCE} = 50µA, V_{CC} ≥ 1.2V, OUT asserted	0.8 x V_{CC}			
	V_{OL}	I_{SINK} = 1.2mA, V_{CC} ≥ 3.2V, OUT not asserted, MAX6407 only			0.3	
		I_{SINK} = 3.2mA, V_{CC} ≥ 4.5V, OUT not asserted, V_{TH} ≤ 4.38V			0.4	
		I_{SINK} = 3.2mA, V_{CC} = V_{TH} (max), V_{TH} ≥ 4.5V, OUT not asserted			0.4	
Open-Drain $\overline{OUT}$ Output Leakage Current (Note 2)		$\overline{OUT}$ not asserted			0.1	µA

Note 1: Production testing done at +25°C only. Overtemperature limits are guaranteed by design and not production tested.
Note 2: Guaranteed by design.

Typical Operating Characteristics

(T_A = +25°C, unless otherwise noted.)

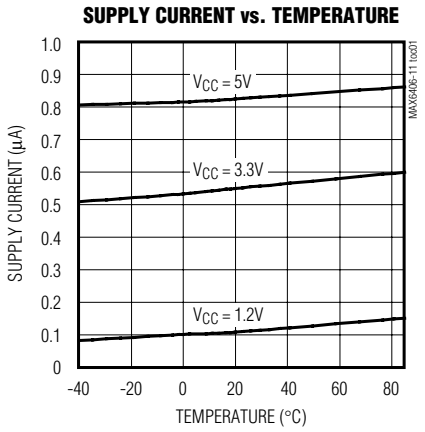

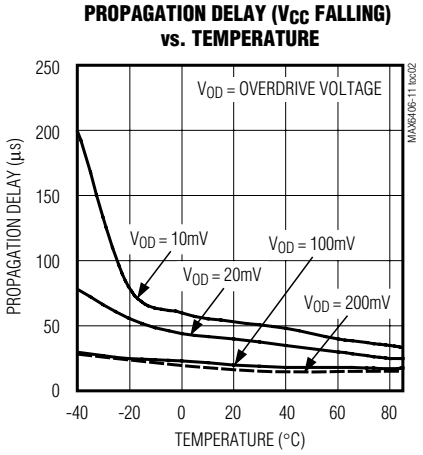

Voltage Detectors in 4-Bump (2 x 2) Chip-Scale Package

Typical Operating Characteristics (continued)

(T_A = +25°C, unless otherwise noted.)

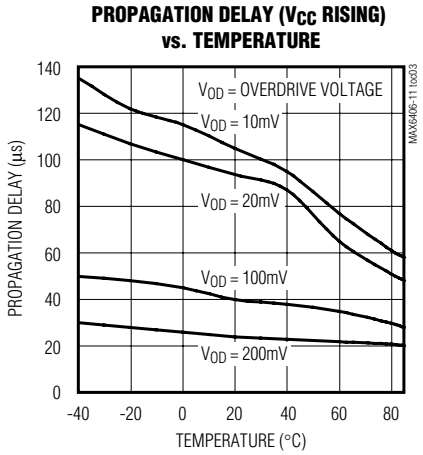

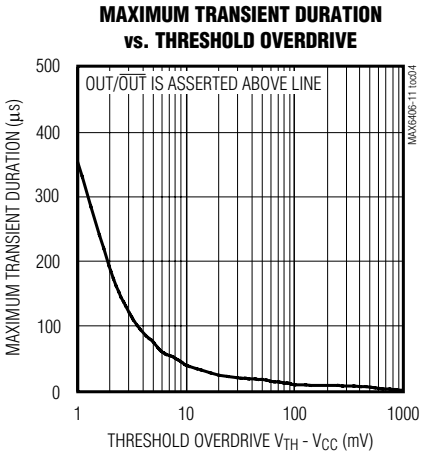

Pin Description

PIN		NAME	FUNCTION
MAX6406/MAX6408 MAX6409/MAX6411	MAX6407/MAX6410		
A1	A1	GND	Ground
B1	—	$\overline{OUT}$	Active-Low Output. $\overline{OUT}$ remains low while V_{CC} is below the threshold. $\overline{OUT}$ is open-drain on the MAX6408/MAX6411 and push-pull on the MAX6406/MAX6409.
—	B1	OUT	Active-High Output. OUT remains high while V_{CC} is below the threshold.
B2	B2	$\overline{MR}$	Active-Low Manual Reset. Internal 50kΩ pullup to V_{CC}. Pull low to assert the output. OUT remains asserted as long as $\overline{MR}$ is low. Leave unconnected or connect to V_{CC} if unused.
A2	A2	V_{CC}	Supply Voltage and Input for the Voltage Detector.

Table 1. Factory-Trimmed Thresholds

PART	SUFFIX	Threshold Voltage, V_{TH} (V)				
		T_A = +25°C			T_A = -40°C to +85°C	
		MIN	TYP	MAX	MIN	MAX
MAX6406BS MAX6407BS MAX6408BS	22*	2.167	2.200	2.233	2.145	2.250
	23*	2.285	2.320	2.355	2.262	2.375
	24	2.364	2.400	2.436	2.340	2.460
	25	2.462	2.500	2.537	2.437	2.562
	26*	2.591	2.630	2.669	2.564	2.692
	27	2.660	2.700	2.741	2.633	2.768
	28	2.758	2.800	2.842	2.730	2.870
	29*	2.886	2.930	2.974	2.857	3.000
	30	2.955	3.000	3.045	2.925	3.075
	31*	3.034	3.080	3.126	3.003	3.150
MAX6409BS MAX6410BS MAX6411BS	33	3.250	3.300	3.350	3.217	3.383
	34	3.349	3.400	3.451	3.315	3.485
	35	3.447	3.500	3.552	3.412	3.587
	36	3.546	3.600	3.654	3.510	3.690
	37	3.644	3.700	3.755	3.607	3.792
	38	3.743	3.800	3.857	3.705	3.895
	39	3.841	3.900	3.958	3.802	3.997
	40	3.940	4.000	4.060	3.900	4.100
	41	4.038	4.100	4.161	3.997	4.202
	42	4.137	4.200	4.263	4.095	4.305
	43	4.235	4.300	4.364	4.192	4.407
	44*	4.314	4.380	4.446	4.270	4.489
	45	4.432	4.500	4.567	4.387	4.612
	46*	4.560	4.630	4.699	4.514	4.746

Factory-trimmed voltage thresholds are available in approximately 100mV increments with a 1.5% room temperature variance.

Note: *Parts marked with an asterisk (*) are standard versions.*

Voltage Detectors in 4-Bump (2 x 2) Chip-Scale Package

Table 2. Device Marking Codes

PART	TOP MARK	PART	TOP MARK	PART	TOP MARK
MAX6406BS31-T	AEF	**MAX6407**BS31-T	AEP	**MAX6408**BS31-T	AEZ
MAX6406BS30-T	AEE	MAX6407BS30-T	AEO	MAX6408BS30-T	AEY
MAX6406BS29-T	AED	MAX6407BS29-T	AEN	MAX6408BS29-T	AEX
MAX6406BS28-T	AEC	MAX6407BS28-T	AEM	MAX6408BS28-T	AEW
MAX6406BS27-T	AEB	MAX6407BS27-T	AEL	MAX6408BS27-T	AEV
MAX6406BS26-T	AEA	MAX6407BS26-T	AEK	MAX6408BS26-T	AEU
MAX6406BS25-T	ADZ	MAX6407BS25-T	AEJ	MAX6408BS25-T	AET
MAX6406BS24-T	ADY	MAX6407BS24-T	AEI	MAX6408BS24-T	AES
MAX6406BS23-T	ADX	MAX6407BS23-T	AEH	MAX6408BS23-T	AER
MAX6406BS22-T	ADW	MAX6407BS22-T	AEG	MAX6408BS22-T	AEQ

PART	TOP MARK	PART	TOP MARK	PART	TOP MARK
MAX6409BS46-T	AFN	**MAX6410**BS46-T	AAX	**MAX6411**BS46-T	ABL
MAX6409BS45-T	AFM	MAX6410BS45-T	AAW	MAX6411BS45-T	ABK
MAX6409BS44-T	AFL	MAX6410BS44-T	AAV	MAX6411BS44-T	ABJ
MAX6409BS43-T	AFK	MAX6410BS43-T	AAU	MAX6411BS43-T	ABI
MAX6409BS42-T	AFJ	MAX6410BS42-T	AAT	MAX6411BS42-T	ABH
MAX6409BS41-T	AFI	MAX6410BS41-T	AAS	MAX6411BS41-T	ABG
MAX6409BS40-T	AFH	MAX6410BS40-T	AAR	MAX6411BS40-T	ABF
MAX6409BS39-T	AFG	MAX6410BS39-T	AAQ	MAX6411BS39-T	ABE
MAX6409BS38-T	AFF	MAX6410BS38-T	AAP	MAX6411BS38-T	ABD
MAX6409BS37-T	AFE	MAX6410BS37-T	AAO	MAX6411BS37-T	ABC
MAX6409BS36-T	AFD	MAX6410BS36-T	AAN	MAX6411BS36-T	ABB
MAX6409BS35-T	AFC	MAX6410BS35-T	AAM	MAX6411BS35-T	ABA
MAX6409BS34-T	AFB	MAX6410BS34-T	AAL	MAX6411BS34-T	AAZ
MAX6409BS33-T	AFA	MAX6410BS33-T	AAK	MAX6411BS33-T	AAY

Detailed Description

Manual Reset Input

Many µP-based products require manual reset capability, allowing the operator, a test technician, or external logic circuit to initiate a reset. A logic low on $\overline{MR}$ asserts OUT/$\overline{OUT}$. OUT/$\overline{OUT}$ remains asserted while $\overline{MR}$ is low. This input has an internal 50kΩ pullup resistor, so it can be left open if it is not used. $\overline{MR}$ can be driven with TTL or CMOS logic levels, or with open-drain/collector outputs. Connect a normally open momentary switch from $\overline{MR}$ to GND to create a manual reset function. If $\overline{MR}$ is driven from long cables or if the device is used in a noisy environment, connect a 0.1µF capacitor from $\overline{MR}$ to ground to provide additional noise immunity.

Applications Information

Interfacing to Different Logic Voltage Components

The MAX6408/MAX6411 have an active-low, open-drain output. This output structure will sink current when $\overline{OUT}$ is asserted. Connect a pullup resistor from $\overline{OUT}$ to any supply voltage up to 5.5V (Figure 1). Select a resistor value large enough to allow a valid logic low (see *Electrical Characteristics*), and small enough to register a logic high while supplying all input currents and leakage paths connected to the $\overline{OUT}$ line.

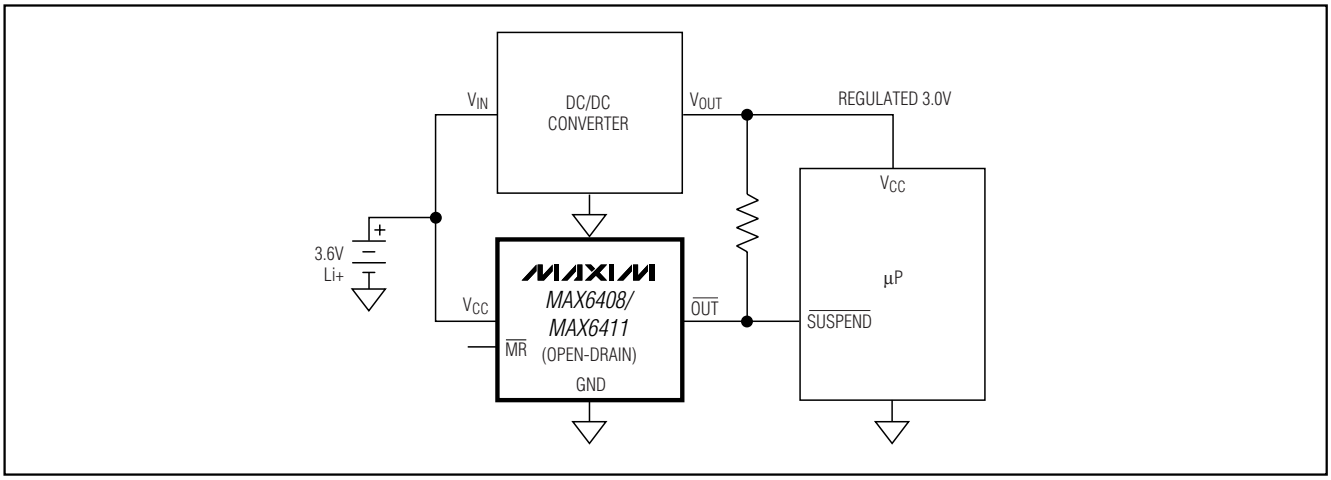

Figure 1. Interfacing to Different Logic Voltage Components

Negative-Going V_{CC} Transients

These devices are relatively immune to short-duration, negative-going V_{CC} transients (glitches).

The *Typical Operating Characteristics* show the Maximum Transient Duration vs. Threshold Overdrive graph, for which output pulses are not generated. The graph shows the maximum pulse width that a negative-going V_{CC} transient may typically have before the devices issue output signals. As the amplitude of the transient increases, the maximum allowable pulse width decreases.

UCSP Reliability

The chip-scale package (UCSP) represents a unique packaging form factor that may not perform equally to a packaged product through traditional mechanical reliability tests. CSP reliability is integrally linked to the user's assembly methods, circuit board material, and usage environment. The user should closely review these areas when considering use of a CSP package. Performance through Operating Life Test and Moisture Resistance remains uncompromised as it is primarily determined by the wafer-fabrication process.

Mechanical stress performance is a greater consideration for a CSP package. CSPs are attached through direct solder contact to the user's PC board, foregoing the inherent stress relief of a packaged product lead frame. Solder joint contact integrity must be considered. Information on Maxim's qualification plan, test data, and usage recommendations are detailed in the UCSP application note, which can be found on Maxim's website at www.maxim-ic.com.

Chip Information

TRANSISTOR COUNT: 512

PROCESS: BiCMOS

Pin Configuration

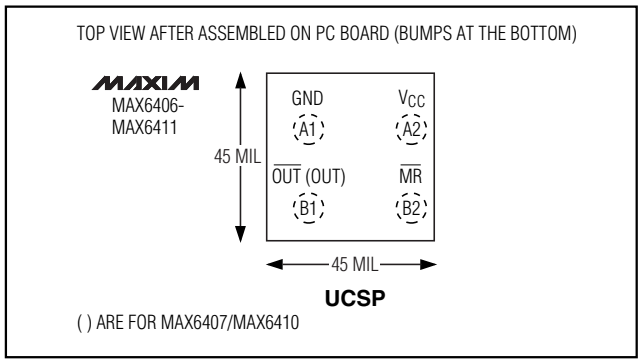

Voltage Detectors in 4-Bump (2 x 2) Chip-Scale Package

Package Information

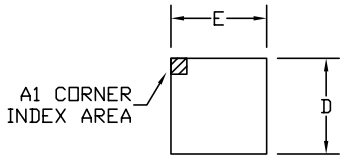

TOP VIEW

SYMBOL	DIMENSIONS
A	0.022 ±.002
E	0.040 ±.002
D	0.040 ±.002
e	0.0197 BASIC
b	ø 0.0120 BASIC
A1	0.009±.0015
A2	0.013 Ref.
h	0.010 Ref.

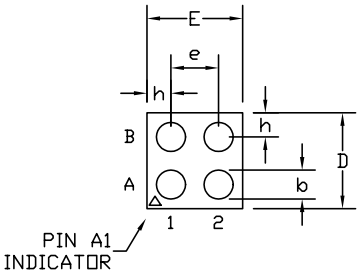

BOTTOM VIEW

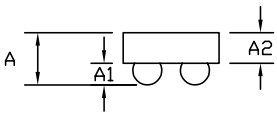

SIDE VIEW

NOTES:
1. ALL DIMENSIONS ARE IN INCHES.
2. MEETS JEDEC MO195.

MAXIM
PROPRIETARY INFORMATION
TITLE: PACKAGE OUTLINE, 4L UCSP, 2x2
APPROVAL | DOCUMENT CONTROL NO. 21-0117 | REV. A | 1/1

4L, UCSP 2x2.EPS

Maxim cannot assume responsibility for use of any circuitry other than circuitry entirely embodied in a Maxim product. No circuit patent licenses are implied. Maxim reserves the right to change the circuitry and specifications without notice at any time.

© 2001 Maxim Integrated Products Printed USA MAXIM is a registered trademark of Maxim Integrated Products.