LOOSE PIECE		TAPE MOUNTED		STUD SIZE	DIMENSIONS			
MATERIAL NO.	ENG. NO.	MATERIAL NO.	ENG. NO.		"S" ±.007/0.18	"W" MAX	"C" MIN	"L" MAX
192030486	A-S-122-14	192030005	A-S-122-14T	1/4"	.256/6.50	.467/11.86	.427/10.85	.894/22.71
192030483	A-S-132-06	192030011	A-S-132-06T	06	.146/3.71	.270/6.86	.238/6.05	.611/15.52
192030485	A-S-132-08	192030014	A-S-132-08T	08	.169/4.29	.270/6.86	.238/6.05	.611/15.52
192030387	A-S-133-10	192030016	A-S-133-10T	10	.209/5.31	.325/8.26	.270/6.86	.666/16.92

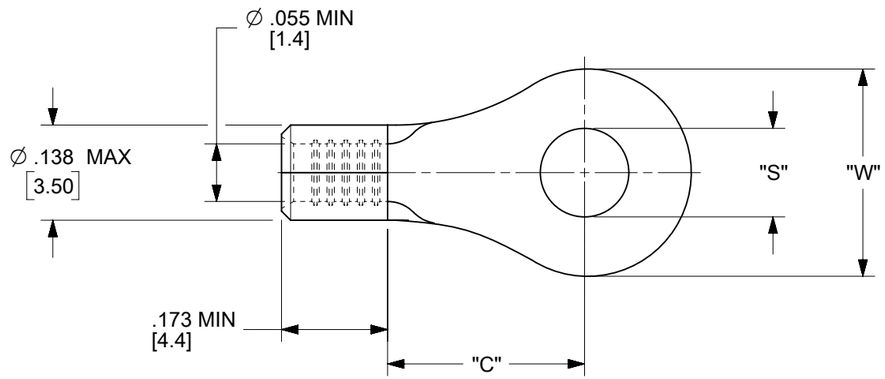

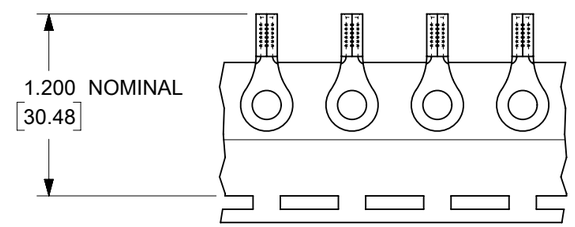

PARTS ON TAPE

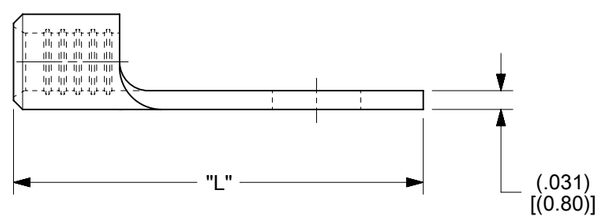

NOTES:
1. MATERIAL: STEEL
2. WIRE SIZE: 22-18 AWG (0.25-1.5 MM²)
3. FINISH: NICKEL PLATED WITH OPTIONAL COPPER FLASH UNDERPLATING, IS ALLOWED FOR IMPROVED ADHESION.
4. PARTS ARE ROHS COMPLIANT.
5. AMBIENT OPERATING TEMPERATURE UP TO 900 °F (483 °C).

C1

THIS DRAWING CONTAINS INFORMATION THAT IS PROPRIETARY TO MOLEX ELECTRONIC TECHNOLOGIES, LLC AND SHOULD NOT BE USED WITHOUT WRITTEN PERMISSION

FUNCTIONAL SYMBOLS: F/A = 0, F/C = 0, F/P = 0
DIVISIONAL SYMBOLS

DIMENSION UNITS: IN/MM
SCALE: 4:1

GENERAL TOLERANCES (UNLESS SPECIFIED)

	MM	INCH
4 PLACES	±	±
3 PLACES	±	±
2 PLACES	±	±
1 PLACE	±	±
0 PLACES	±	±
ANGULAR TOL	± °	

DRAFT WHERE APPLICABLE MUST REMAIN WITHIN DIMENSIONS

CURRENT REV DESC: REMASTERED IN ECTR AND UPDATED NOTE

EC NO: 708789
DRWN: PAWANC 2022/05/12
CHK'D: DMYRICK 2022/06/01
APPR: JMACNEIL 2022/06/02

INITIAL REVISION:
DRWN: EHILE 2006/09/22
APPR: JMACNEIL 2006/09/22

THIRD ANGLE PROJECTION | DRAWING: B-SIZE | SERIES: 19203

molex

RING TONGUE TERMINAL,
22-18 AWG, KRIMPTITE, 900 DEG F (483 DEG C)

PRODUCT CUSTOMER DRAWING

DOCUMENT NUMBER	DOC TYPE	DOC PART	REVISION
SD-19203-036	PSD	001	C1

MATERIAL NUMBER	CUSTOMER	SHEET NUMBER
SEE CHART	GENERAL MARKET	1 OF 1

DOCUMENT STATUS	P1	RELEASE DATE	2022/06/02 15:20:39

FORMAT: Eng-lega-mgmt-prod-B
REVISION: E1
DATE: 2021/05/01