# M2C

## Indicator (Cylindrical 12-dia.)

CSM_M2C_DS_E_4_1

## Indicator with Cylindrical 20-mm × 12-dia. Body

- Same basic design as the A3C Pushbutton Switch.
- Good illumination with even surface brightness.
- Cylindrical body means panel cutouts can be made easily.

**RoHS Compliant**

⚠ Refer to *Safety Precautions for All Pushbutton Switches* and *Safety Precautions* for the A3C.

## List of Models

| Appearance | | Model |
|---|---|---|
| Rectangular | 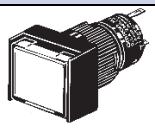 | M2CJ |
| Square | 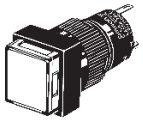 | M2CA |
| Round | | M2CT |

## Model Number Legend

The model numbers used to order sets of Units are illustrated below. One set comprises the Display, Lamp, and Socket Unit.
For information on combinations, refer to *Ordering Information*

| | | | | | | | | | | |
|---|---|---|---|---|---|---|---|---|---|---|
| | | | (1) | | (2) | | (3) | (4) | (5) | |
| M | 2 | C | J | - | 9 | 0 | A | 1 | - | 24E | R |

### (1) Shape of Display

| Symbol | Shape |
|---|---|
| J | Rectangular |
| A | Square |
| T | Round |

### (2) Terminal Type

| Symbol | Terminal type |
|---|---|
| 0 | Solder terminals |

### (3) Lighting Type

| Symbol | Lighting type |
|---|---|
| 1 | Illumination only |

- Colored-illumination models are also available. For details, refer to page 3.

▶ "Colored-illumination" models operate in the way shown below:

| Unlit | Lit |
|---|---|
| White | Color |

The built-in LED is colored.

### (4) Lighting Method

**LED lamp-lighted Models**

| Symbol | Operating voltage |
|---|---|
| 05E | 5 VDC |
| 12E | 12 VDC |
| 24E | 24 VDC |

**Incandescent Lamp-lighted Models**

| Symbol | Operating voltage |
|---|---|
| 06 | 5 VAC/VDC |
| 14 | 12 VAC/VDC |
| 28 | 24 VAC/VDC |

### (5) Color of Display

**For LED lamp**

| Symbol | Color |
|---|---|
| R | Red |
| Y | Yellow |
| G | Green |
| W | White |

**For incandescent lamp**

| Symbol | Color |
|---|---|
| R | Red |
| Y | Yellow |
| G | Green |
| A | Blue |
| W | White |

# Ordering Information

## Ordering as a Set

The model numbers used to order sets of Units are given in the following tables. One set comprises the Display, Lamp, and Socket Unit.

Rectangular Models

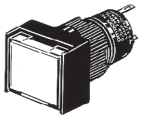

Square Models

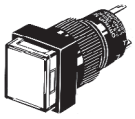

Round Models

### Solder Terminals

| Appearance | Lighting | Model number (for set) | Display color symbol |
|---|---|---|---|
| Rectangular (M2CJ) | LED lamp | **M2CJ-90A1-05E□** | R: red<br>Y: yellow<br>G: green<br>W: white |
| | | **M2CJ-90A1-12E□** | |
| | | **M2CJ-90A1-24E□** | |
| | Incandescent lamp | **M2CJ-90A1-06□** | R: red<br>Y: yellow<br>G: green<br>W: white<br>A: blue |
| | | **M2CJ-90A1-14□** | |
| | | **M2CJ-90A1-28□** | |
| Square (M2CA) | LED lamp | **M2CA-90A1-05E□** | R: red<br>Y: yellow<br>G: green<br>W: white |
| | | **M2CA-90A1-12E□** | |
| | | **M2CA-90A1-24E□** | |
| | Incandescent lamp | **M2CA-90A1-06□** | R: red<br>Y: yellow<br>G: green<br>W: white<br>A: blue |
| | | **M2CA-90A1-14□** | |
| | | **M2CA-90A1-28□** | |
| Round (M2CT) | LED lamp | **M2CT-90A1-05E□** | R: red<br>Y: yellow<br>G: green<br>W: white |
| | | **M2CT-90A1-12E□** | |
| | | **M2CT-90A1-24E□** | |
| | Incandescent lamp | **M2CT-90A1-06□** | R: red<br>Y: yellow<br>G: green<br>W: white<br>A: blue |
| | | **M2CT-90A1-14□** | |
| | | **M2CT-90A1-28□** | |

Note: Enter the desired color symbol for the Display in the □ at the end of the model number.

Individual models: Refer to pages 4 to 5.
(The Display, Lamp, and Socket Unit can be ordered separately.)

■ Ratings: Refer to page 6. ■ Dimensions: Refer to page 7.
■ Accessories: Refer to the A3C.

# Ordering Information

## Illumination-only and Colored-illumination LED Models

"Illumination only" describes LED models for which the screen color is the same whether the LED is lit or not. The screen simply becomes brighter when the LED lights.
Example: Red LED

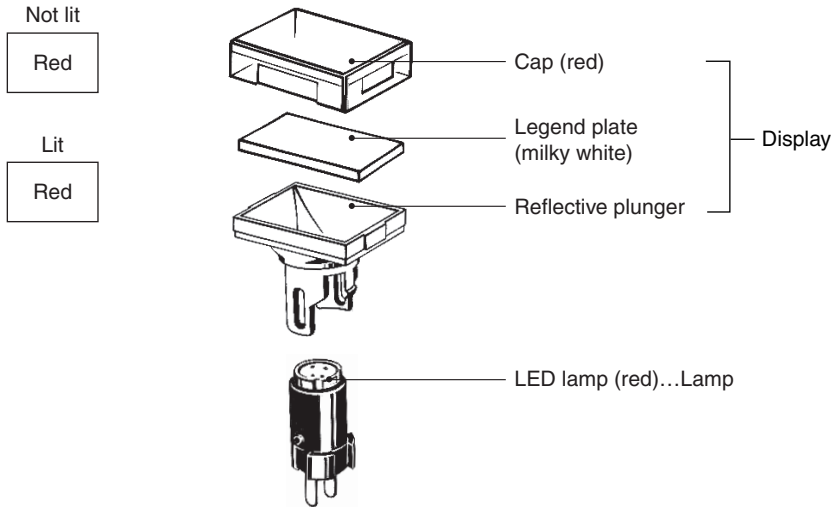


"Colored illumination" describes LED models for which the screen color is white when the LED is not lit and changes to the color of the LED lamp when the LED is lit.

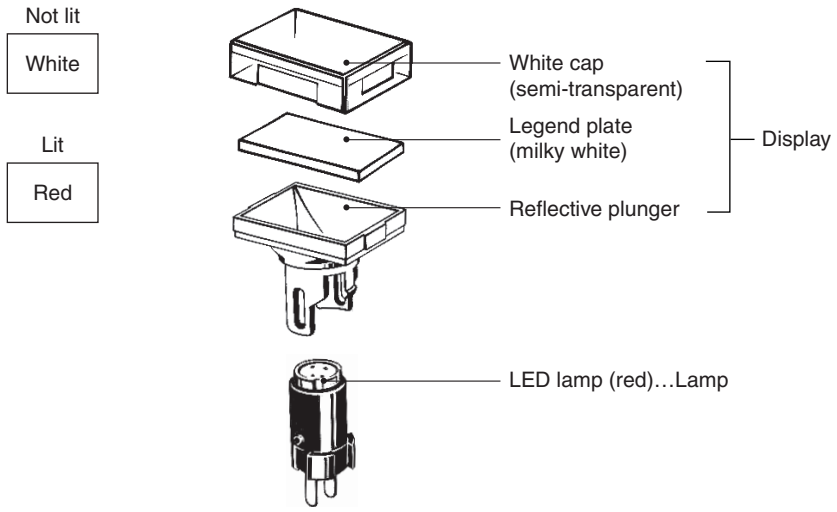


Ordering: With colored-illumination models, order the Display, Lamp, and Socket Unit as shown in the following table.

| Illuminated color | Display | Lamp (LED) | | Socket Unit |
|---|---|---|---|---|
| Red | IP40<br>A3C□-500W<br>Enter one of the following symbols in □.<br>J: Rectangular<br>A: Square<br>T: Round | **A16-□DR** | Enter one of the following symbols in □.<br>5: 5 VDC<br>12: 12 VDC<br>24: 24 VDC | Refer to page 5. Order the Socket Unit that is appropriate for the Display. |
| Yellow | | **A16-□DY** | | |
| Green | | **A16-□DG** | | |

## Ordering Information

**Ordering Individually** .....Displays, Lamps, and Socket Units can be ordered separately. Combinations that are not available as sets can be created using individual Units. Also, store the parts as spares for maintenance and repairs.

**Ordering: Specify a model number from the following page.**

**Display**

Rectangular

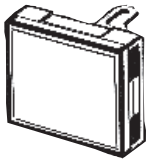

Square

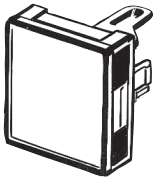

Round

**Lamp**

LED Lamp

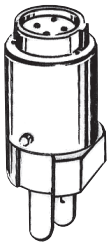

Incandescent lamp

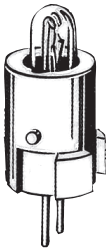

**Socket Unit**

Rectangular

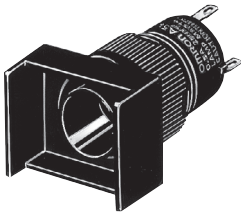

Square

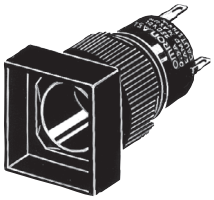

Round

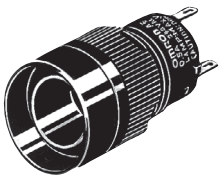

Ordering set combinations: Refer to page 2.

■ Ratings: Refer to page 6. ■ Dimensions: Refer to page 7.
■ Accessories: Refer to the A3C.

## Ordering Information

**Ordering Individually** ..... The Display, Lamp, and Socket Unit can be ordered separately. They can also be used as inventory for maintenance parts.

### Display (Lighted Models)

#### LED Lamp

| Appearance / Button color | Rectangular | Square | Round |
|---|---|---|---|
| | | | |
| **Red** | A3CJ-500R | A3CA-500R | A3CT-500R |
| **Yellow** | A3CJ-500Y | A3CA-500Y | A3CT-500Y |
| **Green** | A3CJ-500GY | A3CA-500GY | A3CT-500GY |
| **White** | A3CJ-500W | A3CA-500W | A3CT-500W |

Note: The red, yellow, and white Displays listed above can be used with either LED lamp-lighted models or incandescent lamp-lighted models.

#### Incandescent Lamp

| Appearance / Button color | Rectangular | Square | Round |
|---|---|---|---|
| | | | |
| **Red** | A3CJ-500R | A3CA-500R | A3CT-500R |
| **Yellow** | A3CJ-500Y | A3CA-500Y | A3CT-500Y |
| **Green** | A3CJ-500G | A3CA-500G | A3CT-500G |
| **White** | A3CJ-500W | A3CA-500W | A3CT-500W |
| **Blue** | A3CJ-500A | A3CA-500A | A3CT-500A |

### Lamp

#### LED Lamp

| Color / Rated voltage | Red | Yellow | Green | White |
|---|---|---|---|---|
| **5 VDC** | A16-5DR | A16-5DY | A16-5DG | A16-5DW |
| **12 VDC** | A16-12DR | A16-12DY | A16-12DG | A16-12DW |
| **24 VDC** | A16-24DR | A16-24DY | A16-24DG | A16-24DW |

#### Incandescent Lamp

| Rated voltage | Model |
|---|---|
| 6 VAC/DC | A16-5 |
| 14 VAC/DC | A16-12 |
| 28 VAC/DC | A16-24 |

### Socket Unit

| Sealing | IP40 | | |
|---|---|---|---|
| | Rectangular | Square | Round |
| Appearance / Terminal | 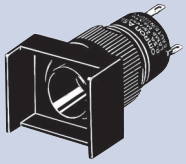 | 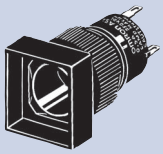 | 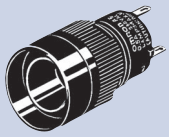 |
| **Solder terminals** | M2CJ-7001 | M2CA-7001 | M2CT-7001 |

# Specifications

## Ratings

### LED Lamp

| Rated voltage | Rated current | Operating voltage | Internal limiting resistance |
|---|---|---|---|
| 5 VDC | 30 mA | 5 VDC±5% | 33 Ω |
| 12 VDC | 15 mA | 12 VDC±5% | 270 Ω |
| 24 VDC | 10 mA | 24 VDC±5% | 1,600 Ω |

### Incandescent Lamp

| Rated voltage | Rated current | Operating voltage |
|---|---|---|
| 6 VAC/VDC | 60 mA | 5 VAC/VDC |
| 14 VAC/VDC | 40 mA | 12 VAC/VDC |
| 28 VAC/VDC | 24 mA | 24 VAC/VDC |

| | |
|---|---|
| **Ambient operating temperature** | –10°C to +55°C (with no icing or condensation) |
| **Ambient operating humidity** | 35% to 85%RH |
| **Ambient storage temperature** | –25°C to +65°C |

## Approved Standard Ratings

**UL (File No. E41515), CSA (File No. LR45258)**

LED: 24 VDC max.
Incandescent lamp: 1 W at 28 VDC/VAC

Note: Certification has been obtained for the Indicator.
For detailed information on individual products that have received certification, consult your supplier.

# Nomenclature

## Model Structure

### Shape of Display

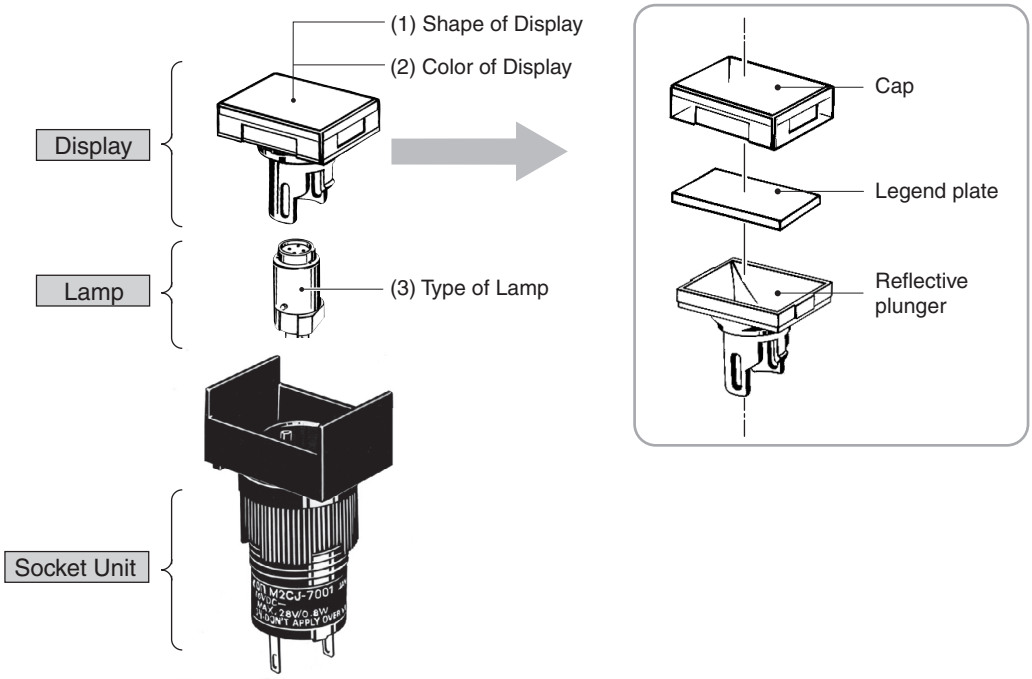


| | Type | Specifications |
|---|---|---|
| (1) | Shape of Pushbutton<br>Rectangular (M2CJ) Square (M2CA) Round (M2CT) | --- |
| (2) | LED Lamp-lighted Models<br>Red, yellow, green, white<br>Incandescent Lamp-lighted Models<br>Red, yellow, green, white, blue | --- |
| (3) | LED Lamp | 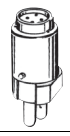 |
| | Incandescent Lamp | |

## Dimensions

(Unit: mm)

| Rectangular Models (M2CJ) | Square Models (M2CA) | Round Models (M2CT) |
|---|---|---|
| 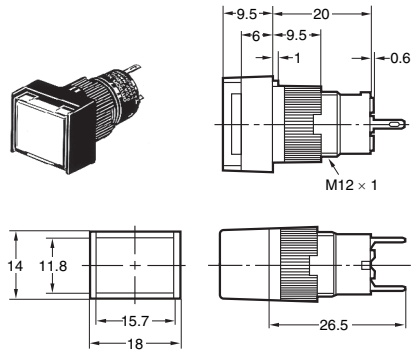 | 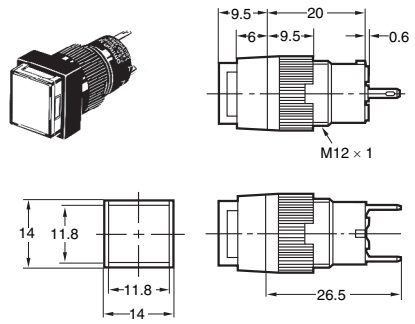 | 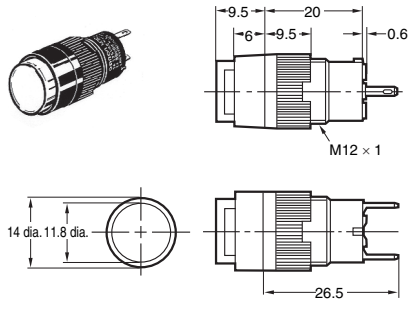 |



Note: Unless specified, there is a tolerance of ±0.4 mm for dimensions.

## Terminal Connections

**Solder terminal**

**Terminal Hole Dimensions**

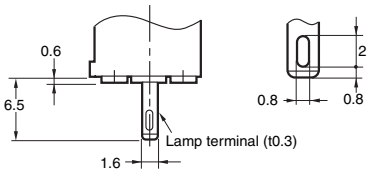



**Terminal Arrangement (bottom view)**

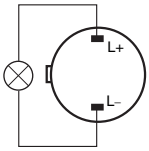



## Panel Cutout (Top View)

| | Rectangular/M2CJ | Square/M2CA, Round/M2CT |
|---|---|---|
| Indicator Unit only | 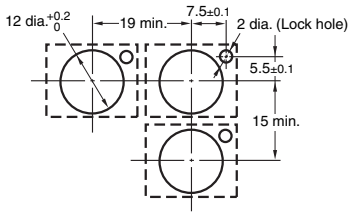  Note: Recommended panel thickness: 1.0 to 3.2 mm. | 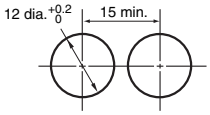  Note: Recommended panel thickness: 1.0 to 3.2 mm. |
| With Dust Cover | 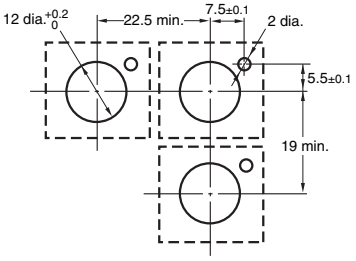  | --- |

• If the panel is to be finished (e.g., coated), make sure that the panel meets the specified dimensions after the coating.

### Accessories, Replacements, and Tools

The accessories, replacements, and tools for the A3C Lighted Pushbutton Switch can also be used with the A3C. Refer to the A3C.

## Safety Precautions

**Refer to *Safety Precautions for Pushbutton Switches* and *Safety Precautions* for the A3C.**

■ Ratings: Refer to page 6. ■ Dimensions: Refer to this page.

- Application examples provided in this document are for reference only. In actual applications, confirm equipment functions and safety before using the product.
- Consult your OMRON representative before using the product under conditions which are not described in the manual or applying the product to nuclear control systems, railroad systems, aviation systems, vehicles, combustion systems, medical equipment, amusement machines, safety equipment, and other systems or equipment that may have a serious influence on lives and property if used improperly. Make sure that the ratings and performance characteristics of the product provide a margin of safety for the system or equipment, and be sure to provide the system or equipment with double safety mechanisms.

**Note: Do not use this document to operate the Unit.**

**OMRON Corporation**
**ELECTRONIC AND MECHANICAL COMPONENTS COMPANY** **Contact: www.omron.com/ecb**

**Cat. No. A206-E1-01**
0812(0207)(O)