Cat. No. W238-E1-10

SYSMAC
CQM1H/CQM1 Series

Dedicated I/O Units

OPERATION MANUAL

OMRON

CQM1H/CQM1Series Dedicated I/O Units

Operation Manual

Revised November 2003

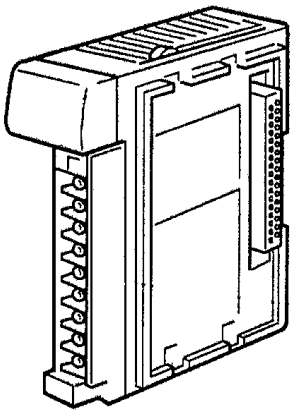

Notice:

OMRON products are manufactured for use according to proper procedures by a qualified operator and only for the purposes described in this manual.

The following conventions are used to indicate and classify precautions in this manual. Always heed the information provided with them. Failure to heed precautions can result in injury to people or damage to property.

⚠ DANGER Indicates an imminently hazardous situation which, if not avoided, will result in death or serious injury.

⚠ WARNING Indicates a potentially hazardous situation which, if not avoided, could result in death or serious injury.

⚠ Caution Indicates a potentially hazardous situation which, if not avoided, may result in minor or moderate injury, or property damage.

OMRON Product References

All OMRON products are capitalized in this manual. The word “Unit” is also capitalized when it refers to an OMRON product, regardless of whether or not it appears in the proper name of the product.

The abbreviation “Ch,” which appears in some displays and on some OMRON products, often means “word” and is abbreviated “Wd” in documentation in this sense.

The abbreviation “PC" means Programmable Controller and is not used as an abbreviation for anything else.

Visual Aids

The following headings appear in the left column of the manual to help you locate different types of information.

Note Indicates information of particular interest for efficient and convenient operation of the product.

1,2,3... 1. Indicates lists of one sort or another, such as procedures, checklists, etc.

© OMRON, 1993

All rights reserved. No part of this publication may be reproduced, stored in a retrieval system, or transmitted, in any form, or by any means, mechanical, electronic, photocopying, recording, or otherwise, without the prior written permission of OMRON.

No patent liability is assumed with respect to the use of the information contained herein. Moreover, because OMRON is constantly striving to improve its high-quality products, the information contained in this manual is subject to change without notice. Every precaution has been taken in the preparation of this manual. Nevertheless, OMRON assumes no responsibility for errors or omissions. Neither is any liability assumed for damages resulting from the use of the information contained in this publication.

TABLE OF CONTENTS

PRECAUTIONS xv

1 Intended Audience xvi
2 General Precautions xvi
3 Safety Precautions xvi
4 Operating Environment Precautions xvii
5 Application Precautions xviii

PART I
B7A Interface Unit 1

SECTION 1
Features and System Configuration 3

1-1 Features 4
1-2 System Configuration 5
1-3 Connecting Devices 5
1-4 Word Allocation 6
1-5 Bit Allocation 7

SECTION 2
Nomenclature and Settings 11

2-1 Nomenclature 12
2-2 Switch Settings 17

SECTION 3
Connections 19

3-1 Connections to B7A Link Terminals. 20
3-2 Wiring 22

Appendices

A Specifications 25

PART II
G730 Interface Unit 27

SECTION 1
Features and System Configuration 29

1-1 Features 30
1-2 System Configuration 31
1-3 Connecting Devices 34

SECTION 2
Nomenclature and Settings 35

2-1 Nomenclature 36
2-2 Switch Settings 39

SECTION 3
Connections 43

3-1 Transmission Cables 44
3-2 External Output Connection Cables 45

SECTION 4
Operation 47

4-1 Word Allocation 48
4-2 Handling Power On. 54
4-3 Transmission Delay Time 54

TABLE OF CONTENTS

Appendices

A Specifications 57

B Troubleshooting 59

PART III
I/O Link Unit 63

SECTION 1
Features and System Configuration 65

1-1 Features 66
1-2 System Configuration 66
1-3 Connecting Devices 66
1-4 Word Allocation. 67

SECTION 2
Nomenclature and Settings. 69

2-1 Nomenclature. 70
2-2 Switch Settings 71

SECTION 3
Connections 73

3-1 SYSMAC BUS Cable Connections 74

Appendices

A Specifications 77

PART IV
Analog Input Unit and Analog Power Supply Units . . . 79

SECTION 1
Features and System Configuration 81

1-1 Features 82
1-2 System Configuration 83
1-3 Connecting Devices 83
1-4 System Construction 84

SECTION 2
Nomenclature and Functions 85

2-1 Nomenclature. 86
2-2 Functions 89

SECTION 3
Operation 91

3-1 Settings 92
3-2 Bit Number Allocation 94
3-3 Programming and Adjustment 96

Appendices

A Specifications 103

B Troubleshooting 107

TABLE OF CONTENTS

PART V
Analog Output Unit and Analog Power Supply Units . . 109

SECTION 1
Features and System Configuration 111

1-1 Features of Analog Output Unit 112
1-2 System Configuration 112

SECTION 2
Nomenclature and Functions 115

2-1 Nomenclature 116
2-2 Functions 117

SECTION 3
Operation 119

3-1 Settings 120
3-2 Bit Number Allocation 122
3-3 Programming and Adjustment 123

Appendices

A Specifications 127
B Troubleshooting 129

PART VI
Sensor Unit. 131

SECTION 1
Features and System Configuration 133

1-1 Features 134
1-2 System Configuration 134
1-3 Connecting Devices 135
1-4 System Construction 136

SECTION 2
Nomenclature and Functions 137

2-1 Nomenclature 138
2-2 Switch Settings 142

SECTION 3
Connections 145

3-1 Wiring Precaution 146
3-2 Mounting and Dismounting the Sensor Module 148
3-3 Connection of CQM1-TU001 Remote Console 149
3-4 Connection of a Variety of Sensors 149

SECTION 4
Sensor Module Operation 153

4-1 Operation without CQM1-TU001 Remote Console 154

SECTION 5
Remote Console Operation 161

5-1 Mode Setting 162
5-2 Sensitivity Adjustment 162

Appendices

A Specifications 165

TABLE OF CONTENTS

PART VII
Linear Sensor Interface Units 175

SECTION 1
Features and System Configuration 177

1-1 Features 178
1-2 System Configuration 179

SECTION 2
Functions 181

2-1 Scaling 182
2-2 Timing Hold. 183
2-3 Scaled Conversion Data/Comparison Result. 186
2-4 Teaching. 187
2-5 Forced Zero (Zero-shift) 188
2-6 Voltage Monitor Output. 188

SECTION 3
Nomenclature and Functions 191

3-1 Nomenclature. 192
3-2 Terminals 193

SECTION 4
Connections 195

4-1 Mounting and Wiring. 196

SECTION 5
Basic Operation 197

5-1 Operating Method 198
5-2 Programming Console Operation 199
5-3 Operation Mode. 200
5-4 Scaling 202
5-5 Comparison 205
5-6 Monitoring. 207

SECTION 6
Applied Operation. 209

6-1 Scaling Value Teaching 210
6-2 Set Value Teaching 211
6-3 Forced-zero Shift 212
6-4 BCD Value Read 213
6-5 Monitor Output 214

SECTION 7
Commands 215

7-1 Command Usage 216
7-2 List of Commands 218
7-3 Commands and Responses 218

Appendices

A Specifications 229
B Block Diagram 231
C Data Processing Timing 233
D Troubleshooting 237

TABLE OF CONTENTS

PART VIII
Temperature Control Units 239

SECTION 1
Temperature Control Unit Model Numbers 241

SECTION 2
CQM1-TC20□/TC30□ Temperature Control Units. . . 243

2-1 Features and Word Allocations 244
2-2 Specifications 245
2-3 Nomenclature 248
2-4 Terminology and Function Descriptions 251
2-5 Wiring 253
2-6 Application 254
2-7 IOTC(—) 262
2-8 Troubleshooting 269
2-9 Command Tables 270

SECTION 3
CQM1-TC00□/TC10□ Temperature Control Units. . . 271

3-1 Features and Word Allocations 272
3-2 Specifications 273
3-3 Nomenclature 274
3-4 Wiring 276
3-5 Application Examples 277
3-6 AT (Expansion Mode) 282
3-7 Troubleshooting 287

Revision History 289

About this Manual:

This manual describes the installation and operation of the CQM1H/CQM1-series Dedicated I/O Units and includes the parts and sections described below. The CQM1H/CQM1-series Dedicated I/O Units consist of the Units listed below.

Please read this manual carefully and be sure you understand the information provided before attempting to install and operate the CQM1H/CQM1-series Dedicated I/O Units.

Part I: B7A Interface Units

Section 1 describes the general features, system configuration, and word allocation of the B7A Interface Units.

Section 2 provides the nomenclature and switch settings for the B7A Interface Units.

Section 3 describes the connections between the B7A Interface Units and B7A Link Terminals.

The **Appendix** provides the specifications for the Units.

Part II: G730 Interface Units

Section 1 describes the general features, system configuration, and word allocation of the G730 Interface Units.

Section 2 provides the nomenclature and switch settings for the G730 Interface Units.

Section 3 describes the connections between the G730 Interface Units and G730 Remote Terminals.

Section 4 provides the operational procedures for the G730 Interface Unit.

The **Appendices** provide the specifications, dimensions, and troubleshooting procedure for the Units.

Part III: I/O Link Unit

Section 1 describes the general features, system configuration, and word allocation of the CQM1-LK501 I/O Link Unit.

Section 2 provides the nomenclature and switch settings for the CQM1-LK501 I/O Link Unit.

Section 3 describes the SYSMAC BUS cable connections for the CQM1-LK501 I/O Link Unit.

The **Appendix** provides the specifications for the Unit.

Part IV: Analog Input Unit and Analog Power Supply Units

Section 1 provides the features and system configuration relating to the Analog Input Unit and Analog Power Supply Units.

Section 2 provides the nomenclature and functions of the Analog Input Unit and Analog Power Supply Units.

Section 3 provides the operational procedures for the Analog Input Unit and Analog Power Supply Units.

The **Appendices** provide the specifications, internal configuration, dimensions, and troubleshooting procedure for the Units.

Part V: Analog Output Unit and Analog Power Supply Units

Section 1 provides the features and system configuration relating to the Analog Output Unit and Analog Power Supply Units.

Section 2 provides the nomenclature and functions of the Analog Output Unit.

Section 3 provides the operational procedures for the Analog Output Unit.

The **Appendices** provide the specifications and troubleshooting procedures for the Units.

⚠ **WARNING** Failure to read and understand the information provided in this manual may result in personal injury or death, damage to the product, or product failure. Please read each section in its entirety and be sure you understand the information provided in the section and related sections before attempting any of the procedures or operations given.

Part VI: Sensor Unit

Section 1 provides the features and system configuration relating to the Sensor Unit and dedicated sensor modules.

Section 2 provides the nomenclature and switch settings for the CQM1-SEN01, CQM1-TU001, E3X-MA11, E3C-MA11, and E2C-MA11.

Section 3 describes the connections between the CQM1-SEN01 and E3X-MA11, E3C-MA11, E2C-MA11, and CQM1-TU001.

Section 4 provides information on the operation of the CQM1-SEN01.

Section 5 provides information on the operation of the CQM1-TU001 Remote Console.

The **Appendix** provides the specifications for the Units.

Part VII: Linear Sensor Interface Units

Section 1 provides the features and system configuration relating to the Linear Sensor Interface Unit.

Section 2 provides an explanation of the scaling, timing hold, measured value, teaching, forced-zero shift, and monitor output functions.

Section 3 provides the nomenclature, and terminal and indicator functions of the Linear Sensor Interface Unit.

Section 4 describes the connections of the Linear Sensor Interface Unit.

Section 5 describes the basic operation of the Linear Sensor Interface Unit using the Programming Console.

Section 6 describes the applied operation of the Linear Sensor Interface Unit using the Programming Console.

Section 7 provides details on the commands and responses of the Linear Sensor Interface Unit.

The **Appendices** provide the specifications, block diagram, data processing timing, and troubleshooting for the Units.

Part VIII: Temperature Control Units

Section 1 lists the Temperature Control Unit model numbers and the basic specifications for each Unit.

Section 2 describes the features and operation of the CQM1-TC20□/TC30□ Temperature Control Units.

Section 3 describes the features and operation of the CQM1-TC00□/TC10□ Temperature Control Units.

The **Appendix** provides the specifications for the Unit.

PRECAUTIONS

This section provides general precautions for using the Programmable Controller (PC) and related devices.

The information contained in this section is important for the safe and reliable application of the Programmable Controller. You must read this section and understand the information contained before attempting to set up or operate a PC system.

1 Intended Audience xvi
2 General Precautions xvi
3 Safety Precautions. xvi
4 Operating Environment Precautions xvii
5 Application Precautions xviii

1 Intended Audience

This manual is intended for the following personnel, who must also have knowledge of electrical systems (an electrical engineer or the equivalent).

- Personnel in charge of installing FA systems.
- Personnel in charge of designing FA systems.
- Personnel in charge of managing FA systems and facilities.

2 General Precautions

The user must operate the product according to the performance specifications described in the operation manuals.

Before using the product under conditions which are not described in the manual or applying the product to nuclear control systems, railroad systems, aviation systems, vehicles, combustion systems, medical equipment, amusement machines, safety equipment, and other systems, machines, and equipment that may have a serious influence on lives and property if used improperly, consult your OMRON representative.

Make sure that the ratings and performance characteristics of the product are sufficient for the systems, machines, and equipment, and be sure to provide the systems, machines, and equipment with double safety mechanisms.

This manual provides information for programming and operating the Unit. Be sure to read this manual before attempting to use the Unit and keep this manual close at hand for reference during operation.

⚠ WARNING It is extremely important that a PC and all PC Units be used for the specified purpose and under the specified conditions, especially in applications that can directly or indirectly affect human life. You must consult with your OMRON representative before applying a PC System to the above-mentioned applications.

3 Safety Precautions

⚠ WARNING Do not attempt to take any Unit apart while the power is being supplied. Doing so may result in electric shock.

⚠ WARNING Do not touch any of the terminals or terminal blocks while the power is being supplied. Doing so may result in electric shock.

⚠ WARNING Provide safety measures in external circuits, i.e., not in the Programmable Controller (CPU Unit and associated Units; referred to as “PC”), in order to ensure safety in the system if an abnormality occurs due to malfunction of the PC or another external factor affecting the PC operation. Not doing so may result in serious accidents.

- Emergency stop circuits, interlock circuits, limit circuits, and similar safety measures must be provided in external control circuits.
- The PC will turn OFF all outputs when its self-diagnosis function detects any error or when a severe failure alarm (FALS) instruction is executed. As a countermeasure for such errors, external safety measures must be provided to ensure safety in the system.

- The PC outputs may remain ON or OFF due to deposition or burning of the output relays or destruction of the output transistors. As a countermeasure for such problems, external safety measures must be provided to ensure safety in the system.
- When the 24-VDC output (service power supply to the PC) is overloaded or short-circuited, the voltage may drop and result in the outputs being turned OFF. As a countermeasure for such problems, external safety measures must be provided to ensure safety in the system.

⚠ **Caution** Execute online edit only after confirming that no adverse effects will be caused by extending the cycle time. Otherwise, the input signals may not be readable.

⚠ **Caution** Confirm safety at the destination node before transferring a program to another node or editing the I/O area. Doing either of these without confirming safety may result in injury.

⚠ **WARNING** Do not attempt to disassemble, repair, or modify any Units. Any attempt to do so may result in malfunction, fire, or electric shock.

⚠ **Caution** Provide appropriate safety measures, such as overheat prevention and alarm systems, in separate circuits to ensure safety of the entire system even when the Temperature Controller malfunctions.

4 Operating Environment Precautions

⚠ **Caution** Do not operate the control system in the following places:

- Locations subject to direct sunlight.
- Locations subject to temperatures or humidity outside the range specified in the specifications.
- Locations subject to condensation as the result of severe changes in temperature.
- Locations subject to corrosive or flammable gases.
- Locations subject to dust (especially iron dust) or salts.
- Locations subject to exposure to water, oil, or chemicals.
- Locations subject to shock or vibration.

⚠ **Caution** Take appropriate and sufficient countermeasures when installing systems in the following locations:

- Locations subject to static electricity or other forms of noise.
- Locations subject to strong electromagnetic fields.
- Locations subject to possible exposure to radioactivity.
- Locations close to power supplies.

⚠ **Caution** The operating environment of the PC System can have a large effect on the longevity and reliability of the system. Improper operating environments can lead to malfunction, failure, and other unforeseeable problems with the PC System. Be sure that the operating environment is within the specified conditions at installation and remains within the specified conditions during the life of the system.

5 Application Precautions

Observe the following precautions when using the PC System.

⚠ **WARNING** Always heed these precautions. Failure to abide by the following precautions could lead to serious or possibly fatal injury.

- Always ground to 100 Ω or less when installing the Units. Improper grounding may result in electric shock.
- Always turn OFF the power supply to the PC before attempting any of the following. Not turning OFF the power supply may result in malfunction or electric shock.
  - Assembling the Units.
  - Setting DIP switches or rotary switches.
  - Connecting or wiring the cables.
  - Connecting or disconnecting the connectors.

⚠ **Caution** Failure to abide by the following precautions could lead to faulty operation of the PC or the system, or could damage the PC or PC Units. Always heed these precautions.

- Fail-safe measures must be taken by the customer to ensure safety in the event of incorrect, missing, or abnormal signals caused by broken signal lines, momentary power interruptions, or other causes.
- Install external breakers and take other safety measures against short-circuiting in external wiring. Insufficient safety measures against short-circuiting may result in burning.
- Mount the Unit only after checking the terminal block completely.
- Be sure that all the mounting screws, terminal screws, and cable connector screws are tightened to the torque specified in the relevant manuals. Incorrect tightening torque may result in malfunction.
- Always use the power supply voltage specified in this operation manual. An incorrect voltage may result in malfunction or burning.
- Take appropriate measures to ensure that the specified power with the rated voltage and frequency is supplied. Be particularly careful in places where the power supply is unstable. An incorrect power supply may result in malfunction.
- Leave the label attached to the Unit when wiring. Removing the label may result in malfunction.
- Remove the label after the completion of wiring to ensure proper heat dissipation. Leaving the label attached may result in malfunction.
- Use crimp terminals for wiring. Do not connect bare stranded wires directly to terminals. Connection of bare stranded wires may result in burning.

- Do not apply voltages to the Input Units in excess of the rated input voltage. Excess voltages may result in burning.
- Do not apply voltages or connect loads to the Output Units in excess of the maximum switching capacity. Excess voltage or loads may result in burning.
- Be sure that the terminal blocks, Memory Units, expansion cables, and other items with locking devices are properly locked into place. Improper locking may result in malfunction.
- Disconnect the functional ground terminal when performing withstand voltage tests. Not disconnecting the functional ground terminal may result in burning.
- Double-check all the wiring and switch settings before turning ON the power supply. Incorrect wiring or switch settings may result in burning.
- Check that the DIP switches and data memory (DM) are properly set before starting operation.
- Check the user program for proper execution before actually running it on the Unit. Not checking the program may result in an unexpected operation.
- Resume operation only after transferring to the new CPU Unit the contents of the DM and HR Areas required for resuming operation. Not doing so may result in an unexpected operation.
- Confirm that no adverse effect will occur in the system before attempting any of the following. Not doing so may result in an unexpected operation.
    - Changing the operating mode of the PC.
    - Force-setting/force-resetting any bit in memory.
    - Changing the present value of any word or any set value in memory.
- Do not pull on the cables or bend the cables beyond their natural limit. Doing either of these may break the cables.
- Do not place objects on top of the cables. Doing so may break the cables.
- When replacing parts, be sure to confirm that the rating of a new part is correct. Not doing so may result in malfunction or burning.
- Before touching the Unit, be sure to first touch a grounded metallic object in order to discharge any static built-up. Not doing so may result in malfunction or damage.
- Do not turn OFF the power supply to the Unit while data is being transferred.
- When transporting or storing the product, cover the PCBs with electrically conductive materials to prevent LSIs and ICs from being damaged by static electricity, and also keep the product within the specified storage temperature range.
- Install the Unit properly as specified in the operation manual. Improper installation of the Unit may result in malfunction.
- Provide a control circuit so that the power to the I/O circuits will turn ON after the power to the PC turns ON. If the power to the I/O circuits turns ON before the power to the PC turns ON, the system may malfunction temporarily.
- If the I/O Hold Bit (SR 25212) is turned ON, the outputs from the PC will not be turned OFF and will maintain their previous status when the PC is switched from RUN or MONITOR mode to PROGRAM mode. Make sure that the external loads will not produce dangerous conditions when this occurs. (When operation stops for a fatal error, including those produced

with the FALS(07) instruction, all outputs from Output Unit will be turned OFF and only the internal output status will be maintained.)

- When assembling the Units or mounting the end cover, be sure to lock them securely as shown in the following illustrations. If they are not properly locked, desired functionality may not be achieved.
- Be sure to mount the end cover to the rightmost Unit.
- Be sure that the connectors, terminal blocks, connection cables, and other items with locking devices are properly locked into place. Improper locking may result in malfunction.
- Be sure to confirm the orientation and polarities when connecting terminal blocks and connectors.
- Do not touch the back side of circuit boards or the components mounted to them with your bare hands. There are sharp leads and other parts on the boards that may cause injury if handled improperly.
- Provide sufficient clearances around the Unit and other devices to ensure proper heat dissipation. Do not cover the ventilation openings of the Unit.
- Do not allow metallic objects or conductive wires to enter the Unit.
- Set the operating settings of the Temperature Controller properly according to the system to be controlled.
- Allow at least 30 minutes after turning ON the Temperature Controller as warmup time.
- Do not use thinner to clean the product. Use commercially available cleaning alcohol.

PART I
B7A Interface Unit

CQM1-B7A02
CQM1-B7A03
CQM1-B7A12
CQM1-B7A13
CQM1-B7A21

SECTION 1
Features and System Configuration

This section describes the general features, system configuration, and word allocation of the CQM1-B7A□□ Interface Units.

1-1 Features 4
1-2 System Configuration 5
1-3 Connecting Devices 5
1-3-1 CPU. 5
1-3-2 B7A Link Terminal. 5
1-4 Word Allocation 6
1-5 Bit Allocation 7

1-1 Features

- The CQM1-B7A□□ Interface Unit incorporates the B7A transmission operations for the CQM1H/CQM1 I/O Unit.
- The following five models of CQM1H/CQM1 B7A Interface Unit are available.

Model	No. of points	
	Input	Output
CQM1-B7A21	16	16
CQM1-B7A13	32	0
CQM1-B7A03	0	32
CQM1-B7A12	16	0
CQM1-B7A02	0	16

- Each Unit can be connected to the same number of points on 16-point B7A Link Terminals as provided by the Unit. For example, two B7A Link Terminal Units with 16 input points each can be connected to a CQM1-B7A13.
- The transmission delay time can be switched between STANDARD (19.2 ms rated) or RAPID (3 ms rated).
- The data processing when a transmission error occurs can be switched between HOLD (see note 1) and LOAD OFF (see note 2).
- The CPU treats the B7A Interface Units as the equivalent number of points. It can handle remote I/O equipment, such as switches and lamps, without recognizing communications.

Note

1. HOLD: When an error occurs, the input bit status immediately prior to the error is held.
2. LOAD OFF: When an error occurs, all input bits turn off.

The B7A Link Terminal is a terminal board that incorporates a communication function, connects to external I/O devices, and communicates with a PC over a single cable, thus reducing wiring effort.

Differences Between CQM1-B7A01 and CQM1-B7A21

CQM1-B7A21 is an upgraded version of the CQM1-B7A01 and can replace the CQM1-B7A01.

The features listed in the table below have been added to the CQM1-B7A21.

Item	CQM1-B7A01	CQM1-B7A21
Transmission delay time	STANDARD only	STANDARD/RAPID switchable
Transmission error processing	HOLD	HOLD/LOAD OFF switchable

Note CQM1-B7A01 is no longer in production. Use the upgraded CQM1-B7A21.

1-2 System Configuration

The following is a CQM1H/CQM1 system configuration with a B7A Interface Unit.

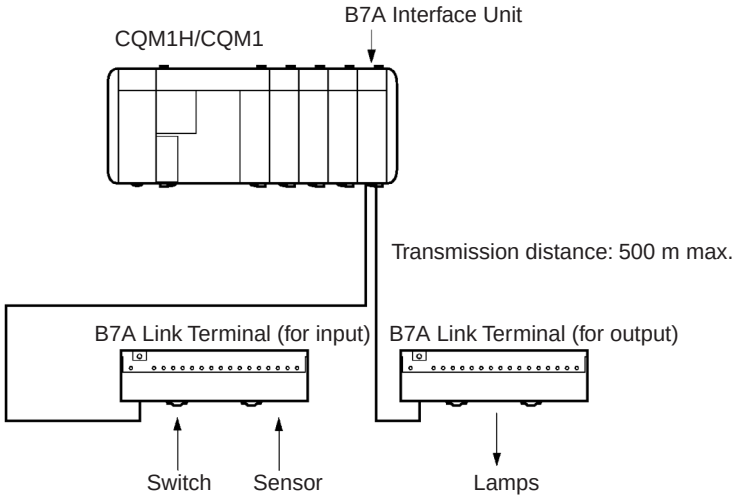

Note The maximum transmission distance depends on the transmission delay time and the power supply wiring.

Refer to *3-1 Connections to B7A Link Terminals*.

1-3 Connecting Devices

1-3-1 CPU

The B7A Interface Unit connects to the following CPUs.

Name	Model
CQM1H-series CPU	CQM1H-CPU11
	CQM1H-CPU21
	CQM1H-CPU51
	CQM1H-CPU61
CQM1-series CPU	CQM1-CPU11-E
	CQM1-CPU21-E
	CQM1-CPU41-EV1
	CQM1-CPU42-EV1
	CQM1-CPU43-EV1
	CQM1-CPU44-EV1

1-3-2 B7A Link Terminal

The B7A Interface Unit connects to the following 16-point B7A Link Terminals with a standard I/O delay of 19.2 ms (typical).

Input

Name	Model	Transmission delay time
Screw terminal models	B7A-T6□1	STANDARD (19.2 ms)
	B7AS-T6□1	
	B7A-T6□6	RAPID (3 ms)
	B7AS-T6□6	
Module models	B7A-T6D2	STANDARD (19.2 ms)
	B7A-T6D7	RAPID (3 ms)
PC connector models	B7A-T□E3	STANDARD (19.2 ms)
	B7A-T□E8	RAPID (3 ms)

Output

Name	Model	Transmission delay time
Screw terminal model	B7A-R6□□1	STANDARD (19.2 ms)
	B7AS-R6□□1	
	B7A-R6□□6	RAPID (3 ms)
	B7AS-R6□□6	
Module model	B7A-R6A52	STANDARD (19.2 ms)
	B7A-R6A57	RAPID (3 ms)
PC connector models	B7A-R□A□3	STANDARD (19.2 ms)
	B7A-R□A□8	RAPID (3 ms)

Note Combine B7A Interface Units and B7A Link Terminals with equal transmission delay times.
Transmission errors will occur if the transmission delay times used in the combination are not equal.
Do not connect B7A Link Terminals with 10 points and I/O mixed points. Connect only 16-point transmission models.

1-4 Word Allocation

The CPU treats the B7A Interface Unit as an equivalent number of connected I/O Units. The words allocation is identical to that for I/O Units, with inputs and outputs allocated from left to right.

Words from 000 including the input bits incorporated by the CPU are allocated for input and words from 100 are allocated for output as shown in the following illustration. Refer to the *CQM1H or CQM1 Operation Manual* for details on I/O word allocation.

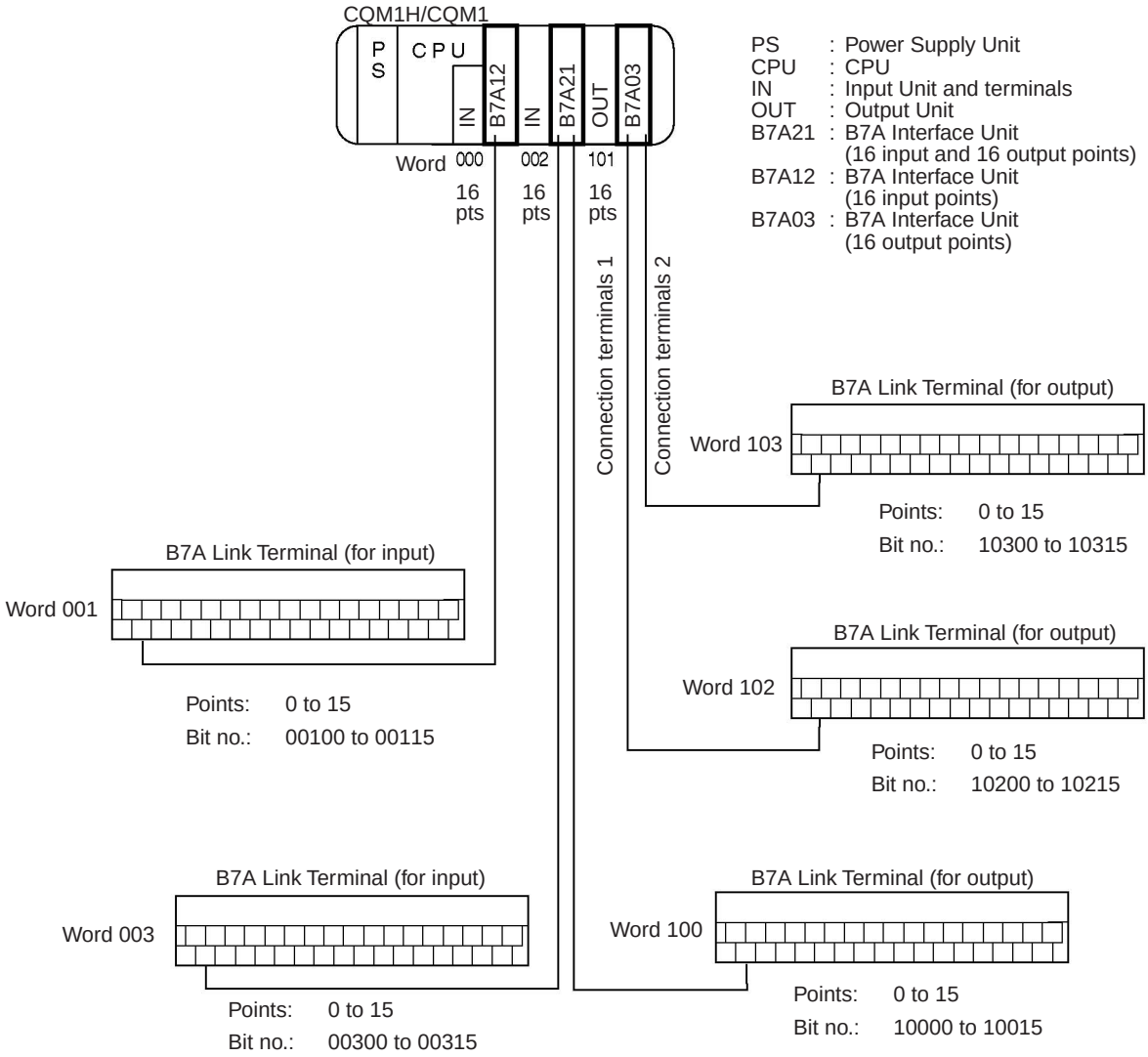

1-5 Bit Allocation

The bit allocation for each model is described below.

CQM1-B7A21

I/O	Word no.	Terminal	Bit				
			15	14 to 12	11 to 8	7 to 4	3 to 0
Input	n (see note 2)	1	See note 1	Input bits			
Output (see note 3)	m (see note 2)	2	Output bits				

CQM-B7A13

I/O	Word no.	Terminal	Bit				
			15	14 to 12	11 to 8	7 to 4	3 to 0
Input	n	1	See note 1	Input bits			
Input	n + 1	2	See note 1	Input bits			

CQM1-B7A03

I/O	Word no.	Terminal	Bit			
			15 to 12	11 to 8	7 to 4	3 to 0
Output (see note 3)	m	1	Output bits			
Output (see note 3)	m + 1	2	Output bits			

CQM1-B7A12

I/O	Word no.	Terminal	Bit				
			15	14 to 12	11 to 8	7 to 4	3 to 0
Input	n	1	See note 1	Input bits			

CQM1-B7A02

I/O	Word no.	Terminal	Bit			
			15 to 12	11 to 8	7 to 4	3 to 0
Output (see note 3)	m	1	Output bits			

Note

1. Bit 15 of the input address is allocated as follows, according to the DIP switch input mode setting.

   15-point input + 1 error mode setting = transmission error bit

   16-point input = input bit 15

   Refer to *2-2 Switch Settings*.
2. Start word address (n: input, m: output)
3. See the following caution.

⚠ **Caution** The minimum input time (minimum required time to read input signal from CPU) at output bit of the B7A Interface Unit is as follows:

Transmission delay time	Minimum input time
STANDARD (19.2 ms)	16 ms
RAPID (3 ms)	2.4 ms

When a user program is created, make sure the ON/OFF signal range from the CPU to the B7A Interface Unit's output bit is larger than the above values. If smaller than the above values, data might not be correct transmitted.

Transmission Errors

Power On

If the input mode is set to 15IN+ERR, the transmission error bit becomes OFF when the CQM1H/CQM1 power is turned on.

The transmission error bit turns ON if normal transmission with the input B7A Link Terminal is not established within 10 ms.

All input bits remain OFF from the time CQM1H/CQM1 is turned on until normal transmission is established.

Inputs

When a transmission error occurs, the input bits are processed according to the transmission error processing setting: HOLD or LOAD OFF.

If the input mode is set to 15IN+ERR, the transmission error bit turns ON.

The transmission error bit turns OFF when normal transmission is re-established.

The normally received signals are then input to the input bits.

Outputs

A transmission error with an output B7A Link Terminal can only be detected at the Link Terminal. Confirm the error with the Link Terminal ERR indicator and error output.

SECTION 2
Nomenclature and Settings

This section provides the nomenclature and switch settings for the CQM1-B7A□□ Interface Units.

2-1 Nomenclature 12
2-2 Switch Settings 17

2-1 Nomenclature

CQM1-B7A21

Front View

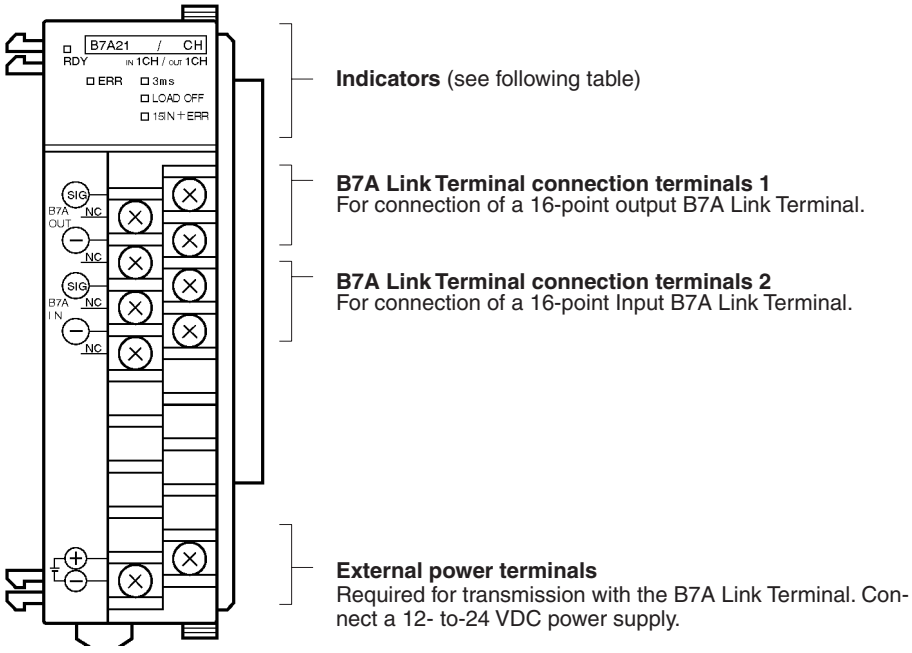

Terminal screws: M3
(Optimum tightening torque: 0.5 N • m)

Indicators

Name		Color	Function
RDY	Unit ready	Green	Lit while the CQM1H/CQM1 is supplied with power.
ERR	Input transmission error	Red	Lit if the B7A Link Terminal for input is malfunctioning or the B7A Link Terminal for input is disconnected.
3ms	Transmission delay time	Orange	Lit while transmission delay time is set to RAPID (3 ms). Not lit when set to STANDARD (19.2 ms).
LOAD OFF	Transmission error processing	Orange	Lit while transmission error processing is set to LOAD OFF. Not lit when set to HOLD.
15IN+ERR	Input mode	Orange	Lit while input mode is set to 15IN+ERR. Not lit when set to 16IN.

CQM1-B7A13

Front View

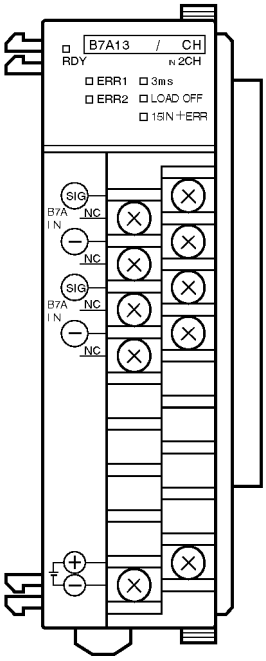

Indicators (see following table)

B7A Link Terminal connection terminals 1
For connection of a 16-point Input B7A Link Terminal. Inputs least-significant word (n) data.

B7A Link Terminal connection terminals 2
For connection of a 16-point Input B7A Link Terminal. Inputs most-significant word (n+1) data.

External power terminals
Required for transmission with the B7A Link Terminal. Connect a 12- to 24-VDC power supply.

Terminal screws: M3
(Optimum tightening torque: 0.5 N • m)

Indicators

Name		Color	Function
RDY	Unit ready	Green	Lit while the CQM1H/CQM1 is supplied with power.
3ms	Transmission delay time	Orange	Lit while transmission delay time is set to RAPID (3 ms). Not lit when set to STANDARD (19.2 ms).
LOAD OFF	Transmission error processing	Orange	Lit while transmission error processing is set to LOAD OFF. Not lit when set to HOLD.
15IN+ERR	Input mode	Orange	Lit while input mode is set to 15IN+ERR. Not lit when set to 16IN.
ERR1	Input 1 transmission error	Red	Lit when normal transmission with the Input B7A Link Terminal connected to connection terminals 1 is not possible or when no Input B7A Link Terminal is connected.
ERR2	Input 2 transmission error	Red	Lit when normal transmission with the Input B7A Link Terminal connected to connection terminals 2 is not possible or when no Input B7A Link Terminal is connected.

CQM1-B7A03

Front View

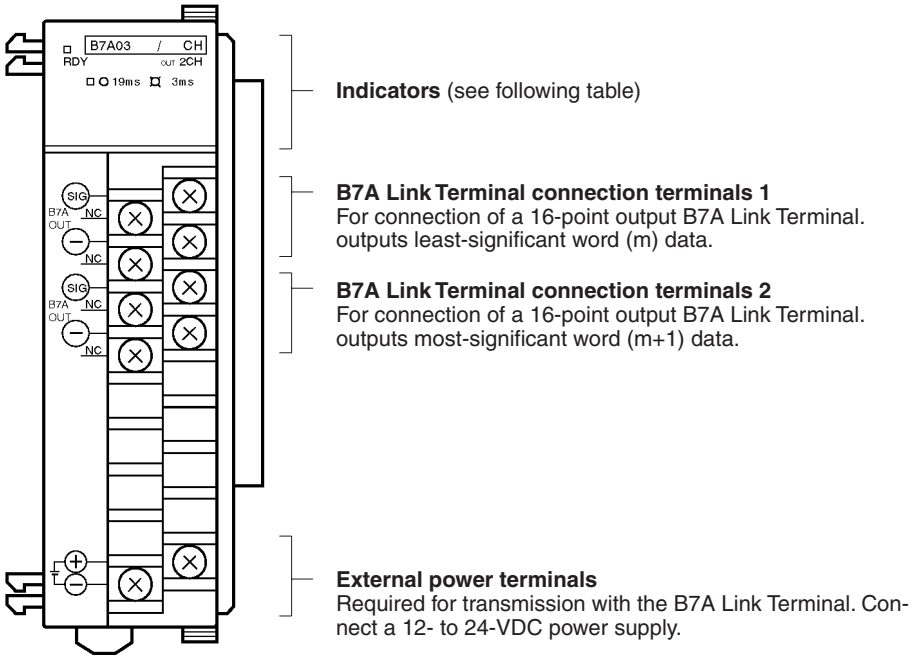

Terminal screws: M3
(Optimum tightening torque: 0.5 N • m)

Indicators

Name		Color	Function
RDY	Unit ready	Green	Lit while the CQM1H/CQM1 is supplied with power.
19ms/3ms	Transmission delay time	Orange	Lit while transmission delay time is set to RAPID (3 ms). Not lit when set to STANDARD (19.2 ms).

CQM1-B7A12

Front View

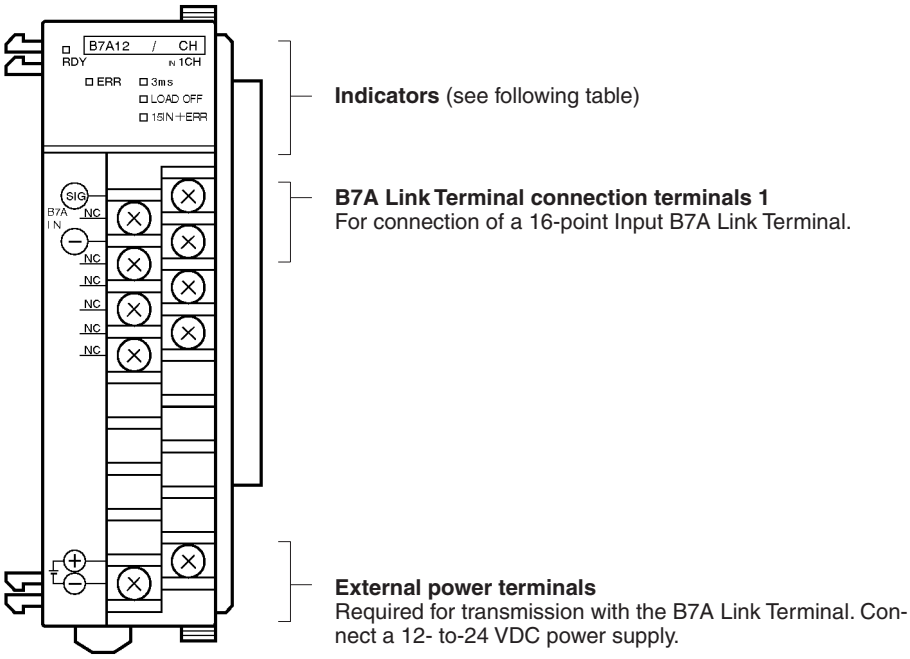

Terminal screws: M3
(Optimum tightening torque: 0.5 N • m)

Indicators

Name		Color	Function
RDY	Unit ready	Green	Lit while the CQM1H/CQM1 is supplied with power.
ERR	Input transmission error	Red	Lit if the B7A Link Terminal for input is malfunctioning or the B7A Link Terminal for input is disconnected.
3ms	Transmission delay time	Orange	Lit while transmission delay time is set to RAPID (3 ms). Not lit when set to STANDARD (19.2 ms).
LOAD OFF	Transmission error processing	Orange	Lit while transmission error processing is set to LOAD OFF. Not lit when set to HOLD.
15IN+ERR	Input mode	Orange	Lit while input mode is set to 15IN+ERR. Not lit when set to 16IN.

CQM1-B7A02

Front View

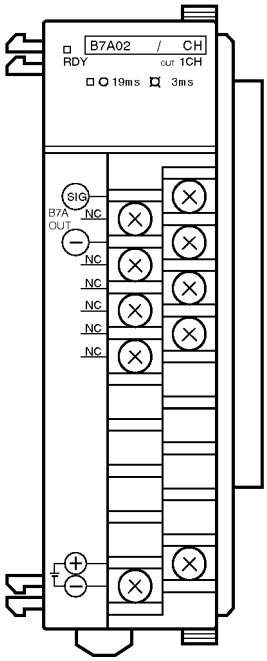

Indicators (see following table)

B7A Link Terminal connection terminals 1
For connection of a 16-point output B7A Link Terminal.

External power terminals
Required for transmission with the B7A Link Terminal. Connect a 12- to 24-VDC power supply.

Terminal screws: M3
(Optimum tightening torque: 0.5 N • m)

Indicators

Name		Color	Function
RDY	Unit ready	Green	Lit while the CQM1H/CQM1 is supplied with power.
19ms/3ms	Transmission delay time	Orange	Lit while transmission delay time is set to RAPID (3 ms). Not lit when set to STANDARD (19.2 ms).

Left-side View

Common to all models.

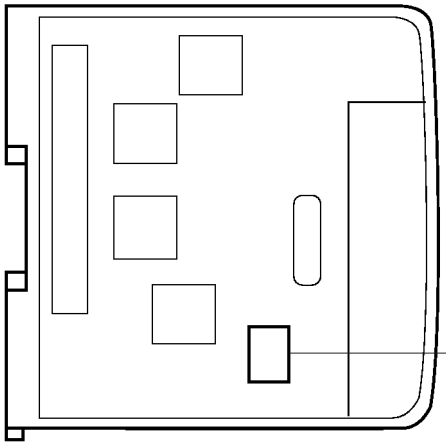

Operation setting DIP Switch
Sets to the operation of the B7A Interface Unit (see page *15). Set the switches before* mounting the B7A Interface Unit in CQM1H/CQM1. To set after mounting, remove the terminal block and make the setting from the front face.

2-2 Switch Settings

Remove the terminal block to expose the DIP switch underneath. Refer to the *CQM1H Operation Manual (W363) or the CQM1 Operation Manual (W226)* for the method of removing the terminal block.

Use a thin-tipped object, such as a small screwdriver, to set the pins.

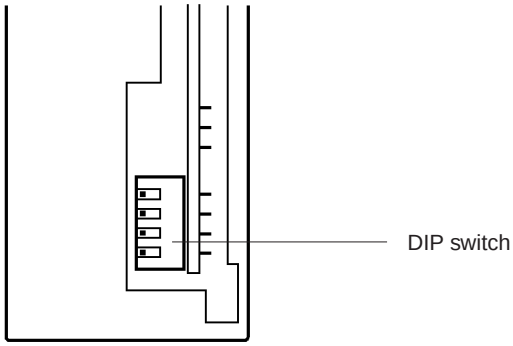

CQM1-B7A21/CQM1-B7A12

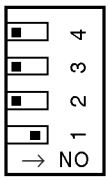

Pin no.	Setting	OFF	ON
4	Transmission delay time	STANDARD (19.2 ms)	RAPID (3 ms)
3	Transmission error processing	HOLD	LOAD OFF
2	Input mode	16IN	15IN+ERR
1	ERR indicator	Not lit	Lit

Note On delivery from the factory, pin 1 is set ON and all others OFF.

CQM1-B7A03/CQM1-B7A02

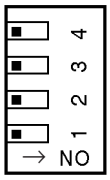

Pin no.	Setting	OFF	ON
4	Transmission delay time	STANDARD (19.2 ms)	RAPID (3 ms)
3	Not used (set OFF)	——	——
2	Not used (set OFF)	——	——
1	Not used (set OFF)	——	——

Note On delivery from the factory, all pins set OFF.

CQM1-B7A13

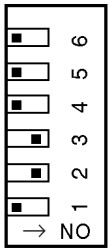

Pin no.	Setting	OFF	ON
6	Transmission delay time	STANDARD (19.2 ms)	RAPID (3 ms)
5	Transmission error processing	HOLD	LOAD OFF
4	Input mode	16IN	15IN+ERR
3	ERR1 indicator	Not lit	Lit
2	ERR2 indicator	Not lit	Lit
1	Not used (set OFF)	——	——

Note On delivery from the factory, pins 2 and 3 are set ON and all others OFF.

⚠ **Caution** Turn off the CQM1H/CQM1 power before setting the pins.

Transmission Delay Time Setting

Sets the transmission delay time for the B7A Interface Unit.

Setting	Transmission Delay Time
ON	RAPID (3 ms)
OFF	STANDARD (19.2 ms) (factory setting)

Set the transmission delay time to RAPID to enable transmission with high-speed B7A Link Terminals with a transmission delay time of 3 ms. Set the transmission delay time to STANDARD to enable transmission with standard B7A Link Terminals with a transmission delay time of 19.2 ms.

Set the pin to match the transmission delay time of the type of B7A Link Terminal connected. A transmission error will occur if the setting does not match the transmission delay time of the B7A Link Terminal.

The transmission delay time setting is made for the entire Unit. It is not possible to make separate settings for each word if multiple words are used.

Transmission Error Processing Setting

This setting determines whether the input bit status immediately prior to the error is held when a transmission error occurs (HOLD) or whether all input bits turn off (LOAD OFF).

Setting	Transmission error processing
ON	LOAD OFF
OFF	HOLD (factory setting)

Input Mode Setting

Set the input mode (the use of bit 15) from the Input B7A Link Terminal to one of the modes shown in the table below. Match the pin setting to the Input B7A Link Terminal.

Setting	Input mode	Description
ON	15-point input + 1 error (15IN+ERR)	Bit 15 used as transmission error bit. The bits available for input are the 15 bits from 00 to 14.
OFF	16-point input (16IN)	Bit 15 also used as a normal input bit. The bits available for input are the 16 bits from 00 to 15. (factory setting)

ERR Indicator Lighting Setting

Sets whether the ERR indicator lights when an input transmission error occurs.

Setting	Description
ON	ERR indicator lights (factory setting)
OFF	ERR indicator does not light

To avoid indicator lighting unnecessarily, set pin OFF if the input side of the B7A Interface Unit is not used.

SECTION 3
Connections

This section describes the connections between the CQM1-B7A□□ Interface Units and B7A Link Terminals.

3-1 Connections to B7A Link Terminals. 20
3-1-1 Recommended Cables 20
3-1-2 Connecting Terminals. 20
3-2 Wiring 22

3-1 Connections to B7A Link Terminals

3-1-1 Recommended Cables

The B7A Interface Unit can be connected to the input and output B7A Link Terminals using the following cables.

Standard Transmission Delay-time Type

Cabtire Cable

Use a VCTF 0.75 x 3 C cabtire cable (100 m max.) if a power supply is shared and a VCTF 0.75 x 2 C cabtire cable (500 m max.) if power is supplied independently.

Rapid Transmission Delay-time Type

Shielded Cable

Use a 0.75 x 3 C shielded cable (50 m max.) if a power supply is shared and a 0.75 x 2 C shielded cable (100 m max.) if power is supplied independently.

⚠ **Caution** If shielded cable is not used for the high-speed transmission delay-time Link Terminal, the transmission distance is not to exceed 10 m regardless of whether power supply is shared or wired separately.

3-1-2 Connecting Terminals

Connect the input and output B7A Link Terminals to the B7A Interface Unit via the following terminals using crimp-style terminals used for CQM1H/CQM1 I/O Units.

CQM1-B7A21

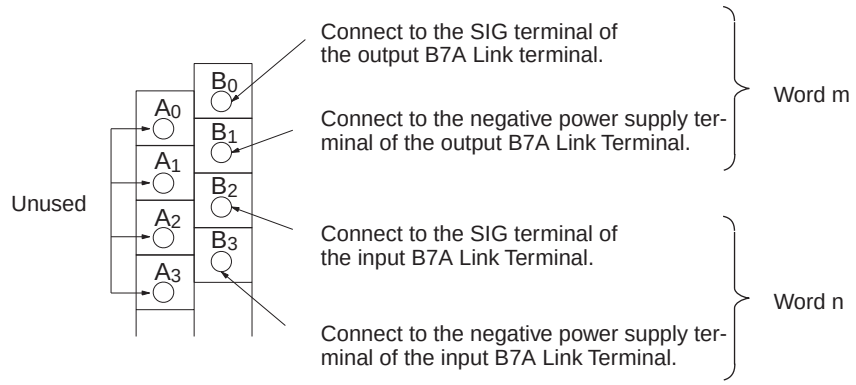

CQM1-B7A13

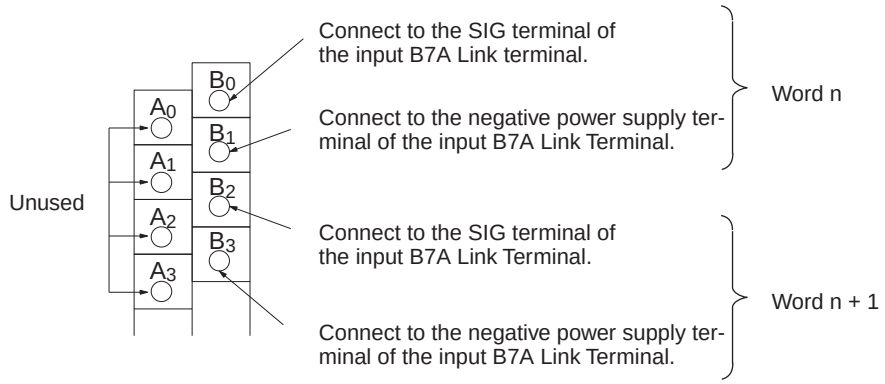

CQM1-B7A03

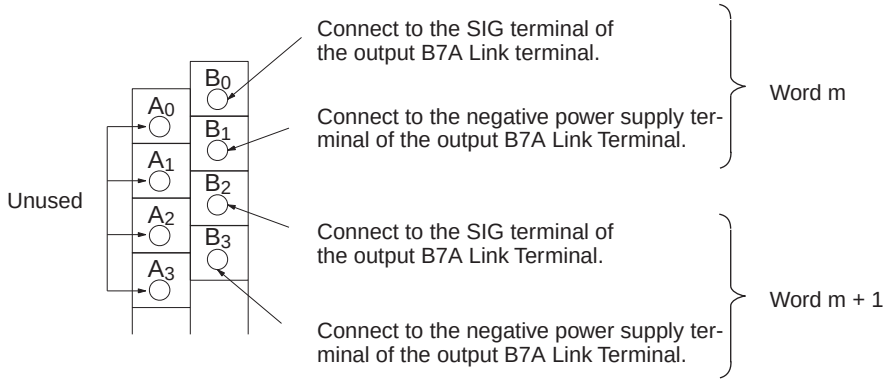

CQM1-B7A12

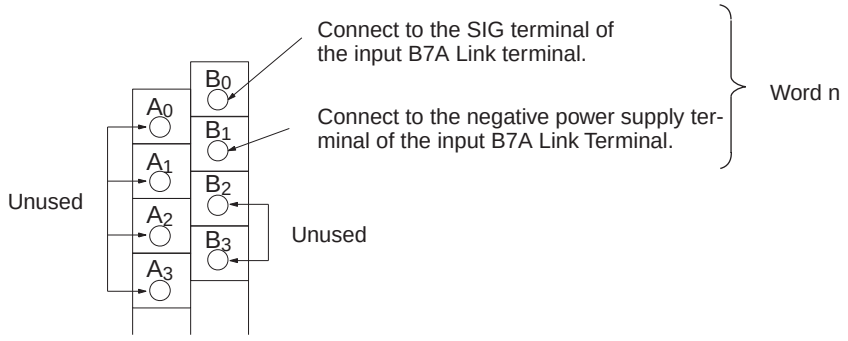

CQM1-B7A02

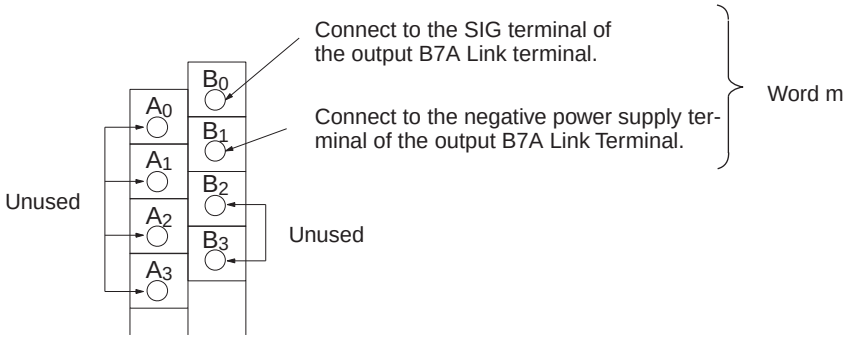

Connectors

Crimp connectors for I/O Unit wiring should be less than 6.2 mm wide (M3), and the wire should be AWG22 to 18 (0.3 to 0.75 $mm^{2)}$.
Terminal screws should be tightened with a torque of 0.5 N • m.

⚠ **Caution** Forked crimp connectors are required by UL and CSA standards.

3-2 Wiring

Wiring between the B7A Interface Unit, input B7A Link Terminal, and output B7A Link Terminal sharing a single power supply differs from wiring between Units using independent power supplies as shown in the following diagrams.

Standard Transmission Delay-time Link Terminal

Single Power Supply

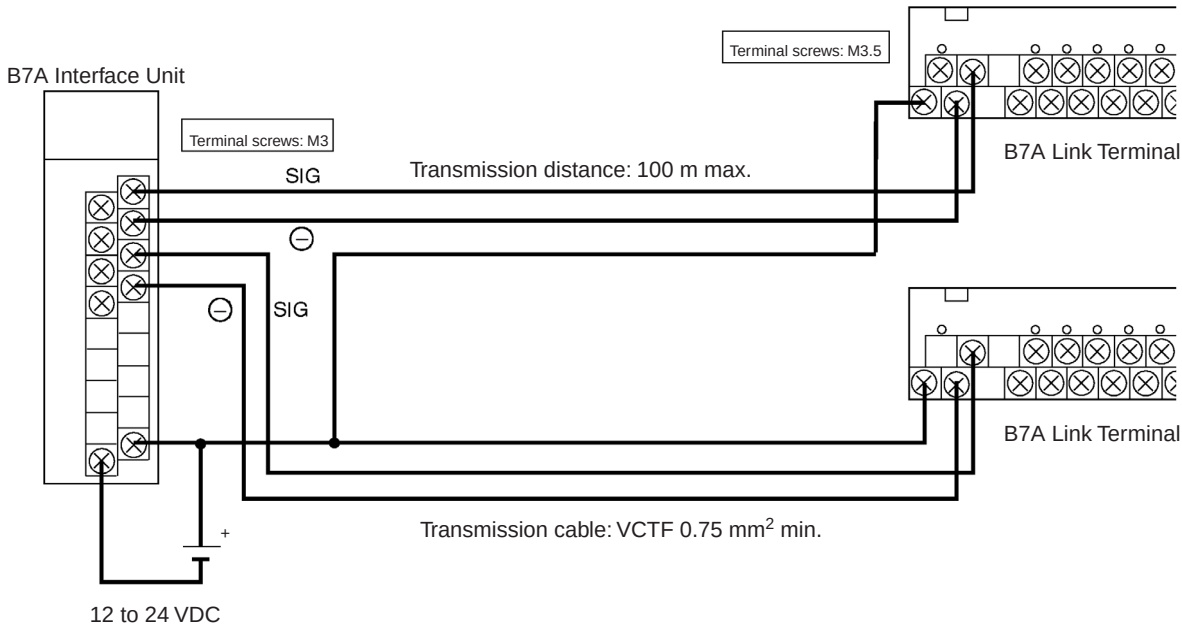

Independent Power Supplies

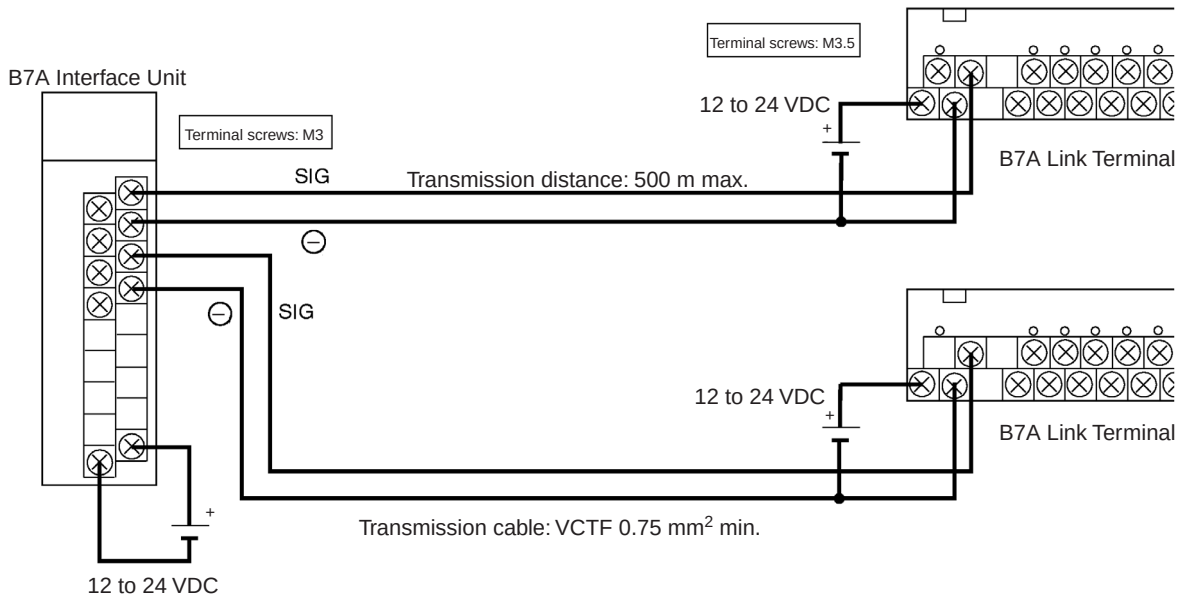

Note
1. The transmission distance depends on the type of wiring used.
2. The size of terminal screw differs for the B7A Interface Unit and B7A Link Terminal. Consider the size of the terminal screws when using crimped terminals.

3. Locate transmission cables away from power cables and high-voltage cables to eliminate the effects of noise.

Rapid Transmission Delay-time Link Terminal

Single Power Supply

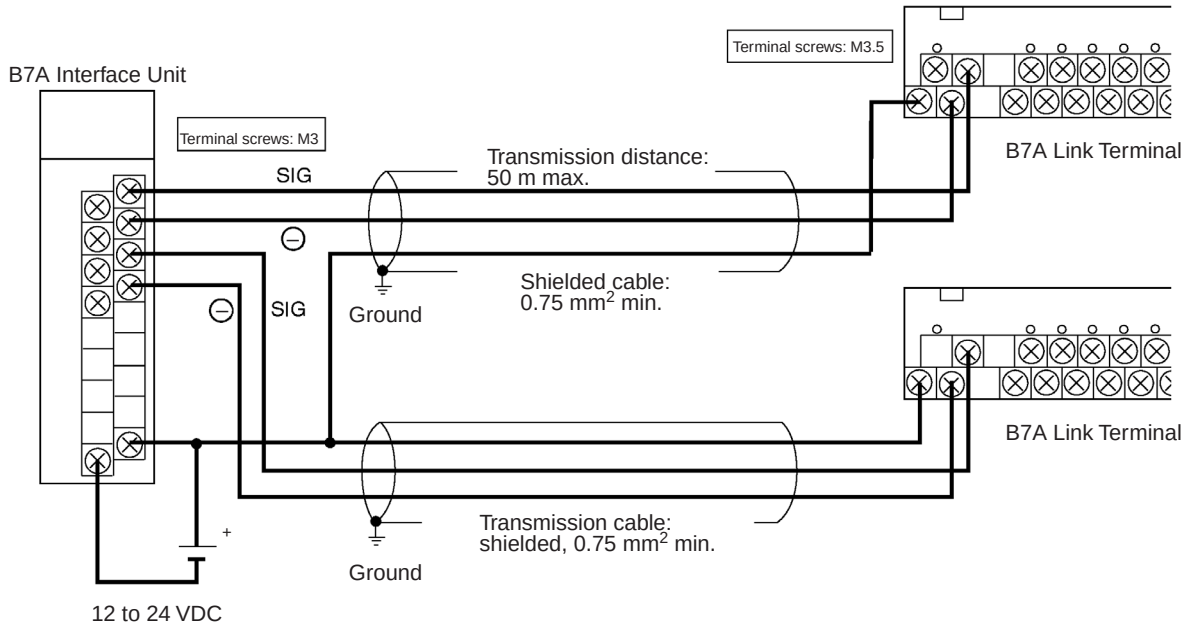

Independent Power Supplies

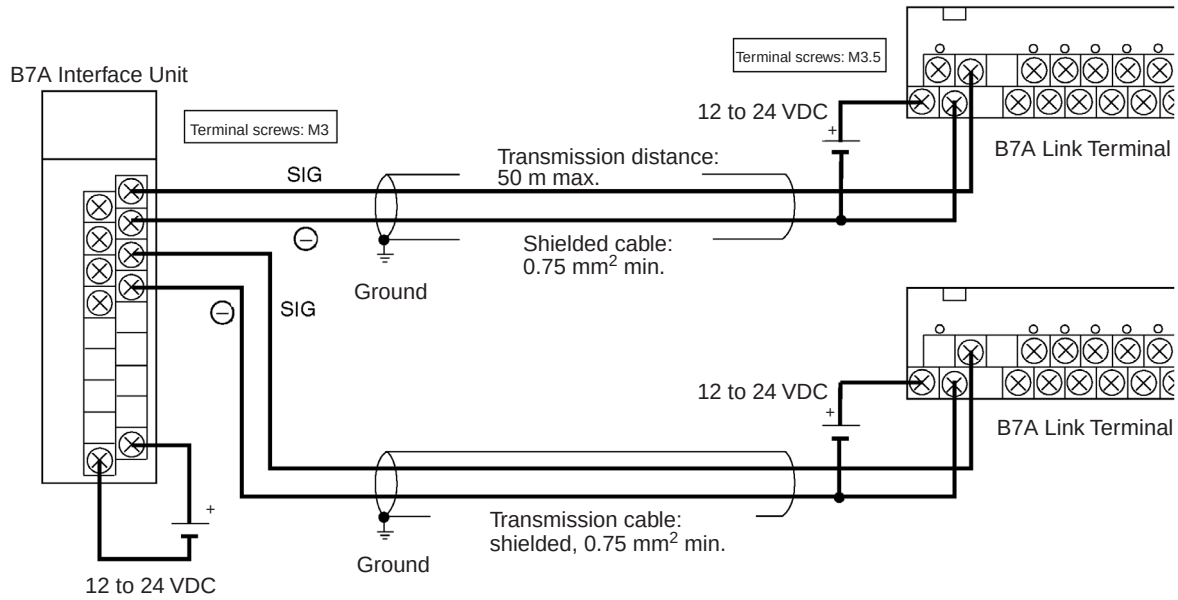

Note

1. The transmission distance depends on the type of wiring used.
2. The size of terminal screw differs for the B7A Interface Unit and B7A Link Terminal. Consider the size of the terminal screws when using crimped terminals.
3. It is recommend that the shield wire be grounded.

4. If shielded cable is not used, the transmission distance is not to exceed 10 m regardless of whether power supply is common or wired separately (using VCTF 0.75 mm^2 min.).
5. Locate transmission cables away from power cables and high-voltage cables to eliminate the effects of noise.

Appendix A
Specifications

Standard Specifications

The standard specifications of the B7A Interface Unit conform to those of the CQM1H/CQM1 PC.

Performance Specifications

Item	Specification
I/O points	B7A21: 16 input points (see note 1), 16 output points B7A13: 32 input points (see note 2) B7A03: 32 output points B7A12: 16 input points (see note 1) B7A02: 16 output points
I/O word allocation	B7A21: 1 word each for input and output (2 words in total) B7A13: 2 words for input B7A03: 2 words for output B7A12: 1 word for input B7A02: 1 word for output
Communication method	Unidirectional, time-division multiplex
Transmission distance (see note 3)	STANDARD: 500 m max. RAPID: 100 m max.
Transmission delay time	STANDARD: 19.2 ms (rated delay), 31 ms max. RAPID: 3 ms (rated delay), 5 ms max.
Minimum input time (see note 4)	STANDARD: 16 ms RAPID: 2.4 ms
Power consumption	100 mA at 5 VDC
External power supply	12 to 24 VDC ±10% (excluding the power required by the B7A Link Terminals) B7A21: 0.11 A min. B7A13: 0.07 A min. B7A03: 0.10 A min. B7A12: 0.05 A min. B7A02: 0.04 A min.
Weight	200 g max.
Dimensions	32 x 110 x 107 (W x H x D) mm

1. Input mode setting allows selection between 16-point input and 15-point+1 error input.
2. Input mode setting allows selection between 32-point input and 30-point+2 error input. Refer to *2-2 Switch Settings*.
3. The maximum transmission distance of the B7A Interface Unit varies with the transmission delay time and the method of wiring. Refer to *3-1 Connections to B7A Link Terminals* for details.
4. Minimum input time is the minimum required time to read an input signal from the CPU. The ON/OFF signal range from the CPU to the B7A Interface Unit's output bit should be larger than the minimum input time.

Dimensions

These dimensions are the same for all B7A Interface Unit models.

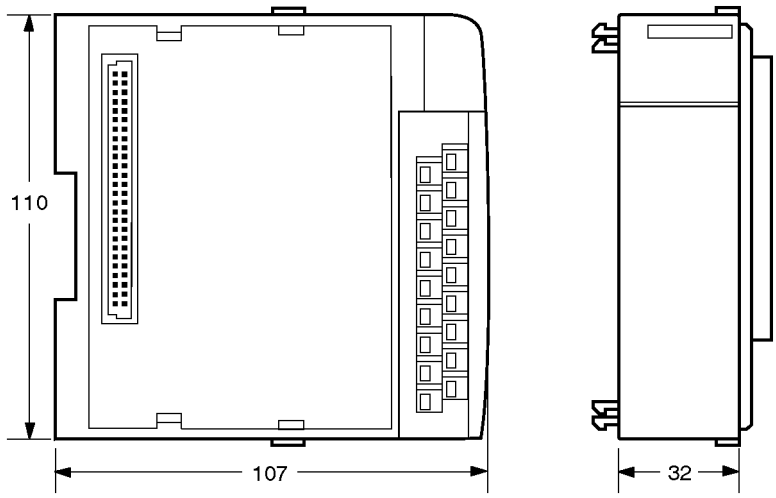

(Unit: mm)

PART II
G730 Interface Unit

CQM1-G7M21

CQM1-G7N01

CQM1-G7N11

SECTION 1
Features and System Configuration

This section describes the general features, system configuration, and word allocation of the G730 Interface Units.

1-1 Features 30
1-2 System Configuration 31
1-3 Connecting Devices 34
1-3-1 CPU. 34
1-3-2 G730 Remote Terminal (Slave) 34

1-1 Features

The CPU handles the Interface Units as I/O Units, thereby eliminating tedious procedures. Using a G730 Interface Unit allows signals for remote I/O equipment, such as switches and lamps, to be handled and controlled by the G730 Remote Terminal.

The G730 Remote Terminal is a terminal block with added communications functions. It is connected to remote I/O equipment and PCs. Connection to the PC by a single pair of cables reduces wiring effort.

For more information about the G730 Remote Terminal, refer to the *I/O Terminal Series Catalog (X044)*.

CQM1-G7M21 Master

Switch settings on the Master allow simultaneous connection of G730 Remote Terminals (Slaves) with up to 32 input points and 32 output points.

Up to two Expansion Masters can be connected to each Master (one system) to permit control of up to 128 points.

Multiple Masters can be used.

Connection of multiple Masters in separate systems permits control within the range permitted for the CPU.

The number of input points and output points can independently be switched between 32 and 16.

The HOLD/HOLD OFF setting determines whether the signals into the CPU are held (HOLD) or cleared (HOLD OFF) when a transmission error occurs.

CQM1-G7N□1 Expansion Master

An Expansion Master is used if the Master alone does not allow connection of sufficient points. The Expansion Masters are always connected in series with the Master and up to two Expansion Masters can be connected to each Master.

Expansion Masters are available as Input Units (G7N11) and Output Units (G7N01). Switch settings allow connection of G730 Remote Terminals (Slaves) with up to 32 points.

The number of input points and output points can independently be switched between 32 and 16 for both Input Units and Output Units.

1-2 System Configuration

The following are CQM1H/CQM1 system configuration examples with G730 Interface Units.

Configuration with One Master

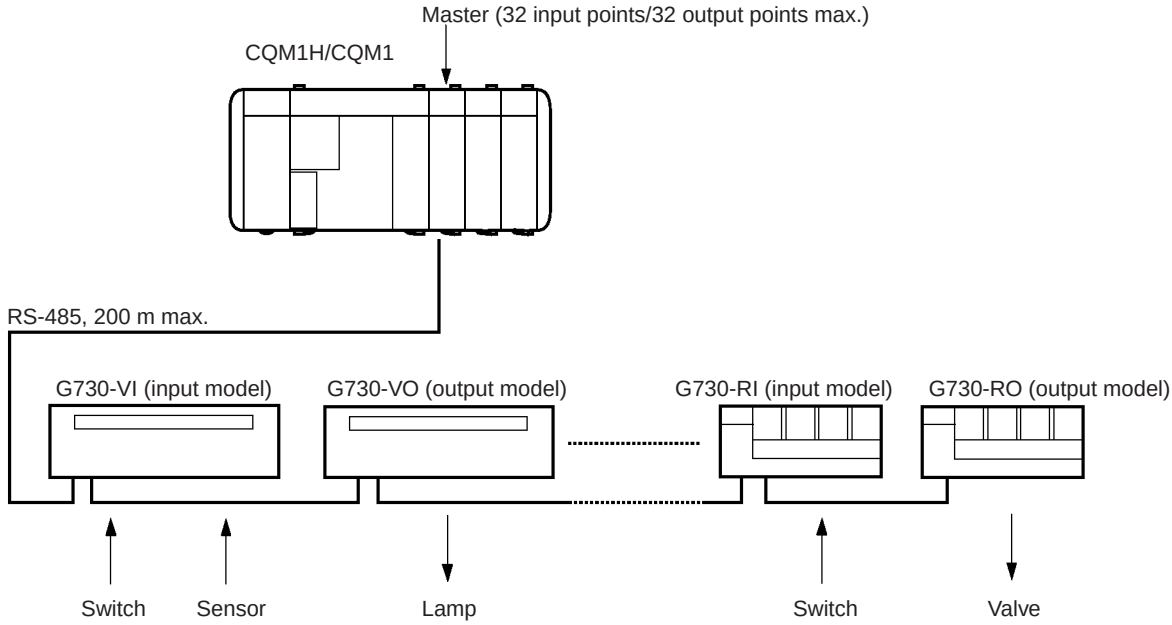

Note

1. Switches on the Master allow input and output to be independently set to 2 words (32 points) or 1 word (16 points). Connect Slaves according to the set number of points.
2. If both input and output are set to 2 words (32 points), up to eight Input Units and eight Output Units can be connected, if 4-point Slaves are used.

Configuration as a Single System with Expansion Masters

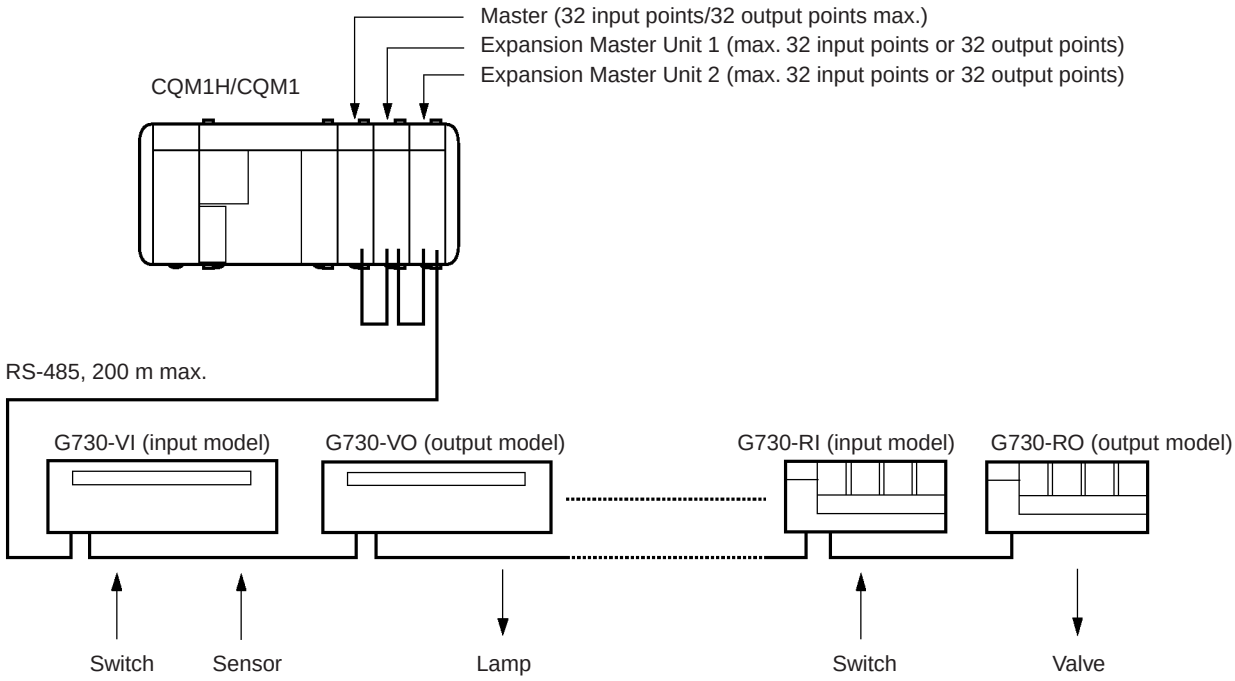

Note

1. Use one Master in any system. The systems must be separated if multiple Masters are used. (See page 33)
2. Up to two Expansion Masters can be connected to each Master.
3. When two Expansion Masters are used, set one as Unit 1 and the other as Unit 2. The Slave address for Unit 2 can only be used for an 8-point or 16-point Slave. It cannot be used for a 4-point Slave.
4. The combination of one Master with two Expansion Masters allows control of up to 128 points.
5. The maximum number of connectable Slaves is 24 4-point Slaves and 4 8-point Slaves, making a total or 28 Units.

Configuration as Multiple Systems

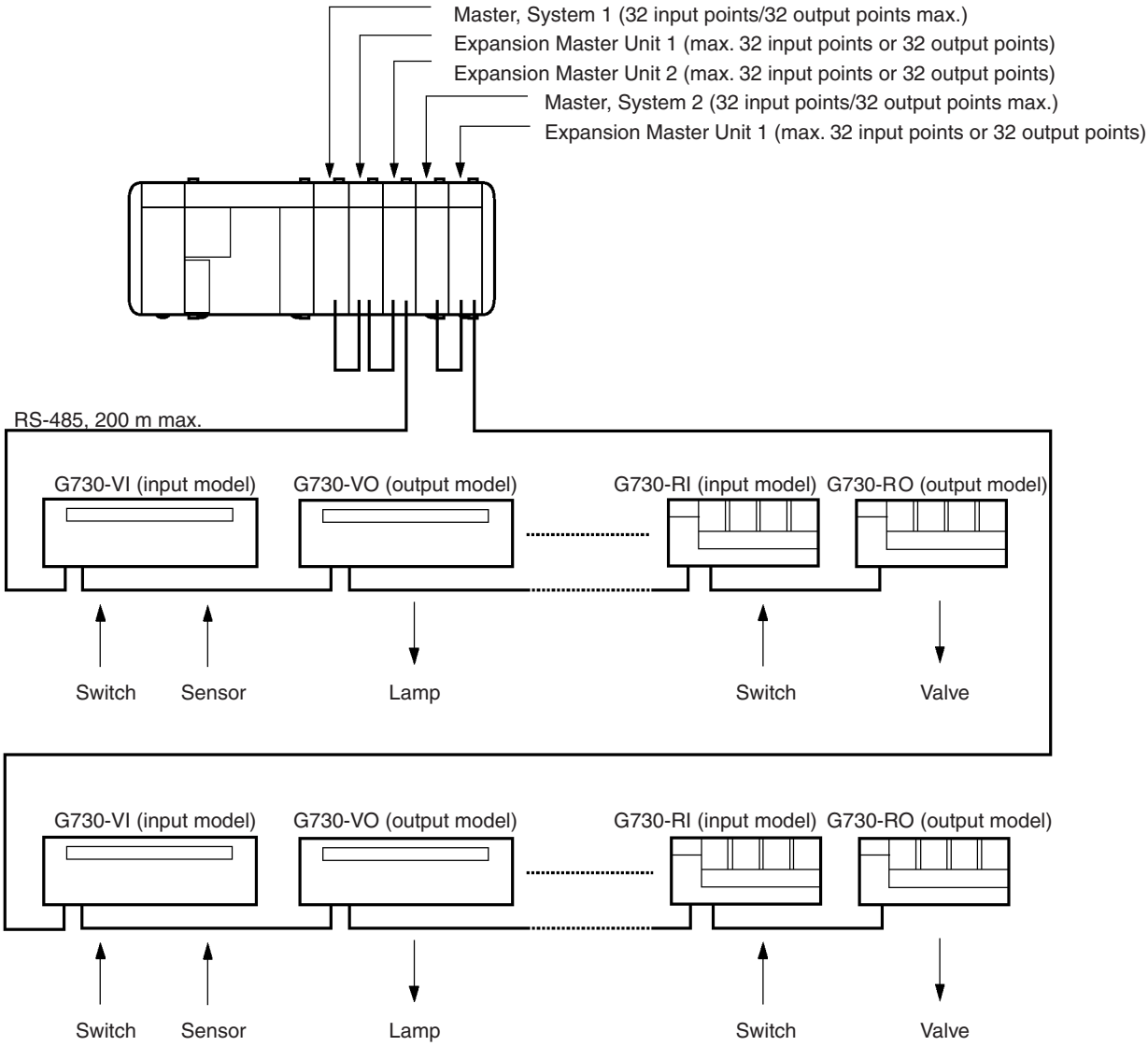

Note

1. When multiple Masters are used, allocate system numbers to them in sequence from 1, starting from the Master nearest the CPU. The system numbers have no special significance. Refer to *4-1 Word Allocation*.
2. Up to two Expansion Masters can be connected to each Master.
3. When two Expansion Masters are used, set one as Unit 1 and the other as Unit 2. The Slave address for Unit 2 can only be used for an 8-point or 16-point Slave. It cannot be used for a 4-point Slave.
4. Masters and Expansion Masters can be used in any combination, provided that the maximum number of input and output points remains within the range permitted for the CPU.

1-3 Connecting Devices

1-3-1 CPU

The G730 Interface Unit connects to the following CPUs.

Name	Model	Max. I/O Points (see note)
CQM1H-series	CQM1H-CPU11	256 (16 words)
	CQM1H-CPU21	
	CQM1H-CPU51	512 (32 words)
	CQM1H-CPU61	
CQM1-series	CQM1-CPU11-E	128 (8 words)
	CQM1-CPU21-E	
	CQM1-CPU41-EV1	256 (16 words)
	CQM1-CPU42-EV1	
	CQM1-CPU43-EV1	
	CQM1-CPU44-EV1	

Note The number of points includes the CPU internal 16 input points (one word). Therefore, the actual maximum numbers of points usable by the G730 Interface Unit are 112 points (7 words), 240 points (15 words), and 496 points (31 words) respectively.

1-3-2 G730 Remote Terminal (Slave)

The following G730 Remote Terminals can be connected to a G730 Interface Unit.

Model	I/O type	I/O points
G730-RID04	Relay input (DC)	4
G730-RIA04	Relay input (AC)	
G730-ROC04	Relay output	
G730-ROC04-A	Relay output (with error detection function)	
G730-VID04	DC input, NPN (common +)	
G730-VOD04	Transistor output, NPN (common –)	
G730-ROC08	Relay output	8
G730-AOM08	Relay output (power MOS FET)	
G730-VID08	DC input, NPN (common +)	
G730-VID08-1	DC input, PNP (common –)	
G730-VOD08	Transistor output, NPN (common –)	
G730-VOD08-1	Transistor output, PNP (common +)	
G730-ROC16	Relay output	16
G730-AOM16	Relay output (power MOS FET)	
G730-VID16	DC input, NPN (common +)	
G730-VOD16	Transistor output, NPN (common –)	

For more information about the G730 Remote Terminal, refer to the *I/O Terminal Series Catalog (X044)*.

SECTION 2
Nomenclature and Settings

This section provides the nomenclature and switch settings for the G730 Interface Units.

2-1 Nomenclature 36
2-2 Switch Settings 39

2-1 Nomenclature

CQM1-G7M21 Master

Front View

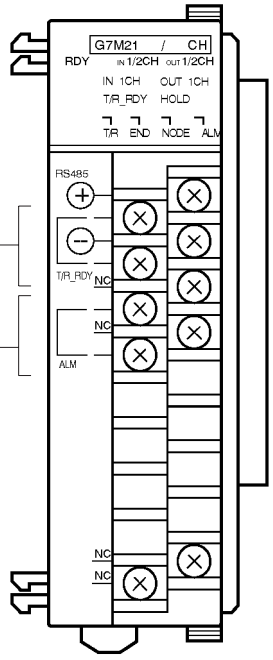

Indicators (see following table)

Transmission terminal
(Refer to *3-1 Transmission Cables*)
For connection of transmission cable to Expansion Master or Slave.

Transmission Ready terminals
(Refer to *3-2 External Output Connection Cables*)
Terminals shorted while in transmission status with power on. Read signal at CPU and confirm transmission ready status before enabling data.
Refer to *4-2 Handling Power On*.
The output from these terminals linked to ON/OFF status of the T/R RDY indicator.

ALM output terminals
(Refer to *3-2 External Output Connection Cables*)
Terminals shorted if an error occurs in the output of a unit with error detection function (G730-ROC04-A).

Terminal screws: M3
(Optimum tightening torque: 0.5 N • m)

Indicators

Name		Color	Function
RDY	Unit Ready	Green	Lit when power is on and if CQM1H/CQM1 recognizes a Master.
IN 1CH	IN Mode	Orange	Lit while number of inputs set to 1 word (16 points). Not lit when set to 2 words (32 points).
OUT 1CH	OUT Mode	Orange	Lit while number of outputs set to 1 word (16 points). Not lit when set to 2 words (32 points).
T/R RDY	Transmission Ready	Green	Lit while in transmission status with power on. Not lit while in transmission error.
HOLD	HOLD Setting	Orange	Lit while DIP switch set to HOLD (data held when a transmission error occurs).
T/R	Transmitting	Red	Flashes while searching for terminator or during transmission with power turned on. Lit when there is a transmission error. Not lit when there is an error in the Master.
END	Terminator	Red	Lit when the power is turned on. Goes out when the terminator is found. Flashes when multiple terminators are present.

Name		Color	Function
NODE	Slave Setting Error	Red	Lit when Slave set to #28 to #30. Flashes for other address setting error (refer to *Appendix B Troubleshooting* for details).
ALM	Slave Alarm	Red	Lit after error occurs with Slave output (G730-ROC04-A).

Note ALM Output:
The Slave address and bit address cannot be checked after a failure occurs.

It is not possible to differentiate between Open and Short modes.

For more information about the G730 Remote Terminal, refer to the *I/O Terminal Series Catalog (X044)*.

CQM1-G7N11 Input Master

Front View

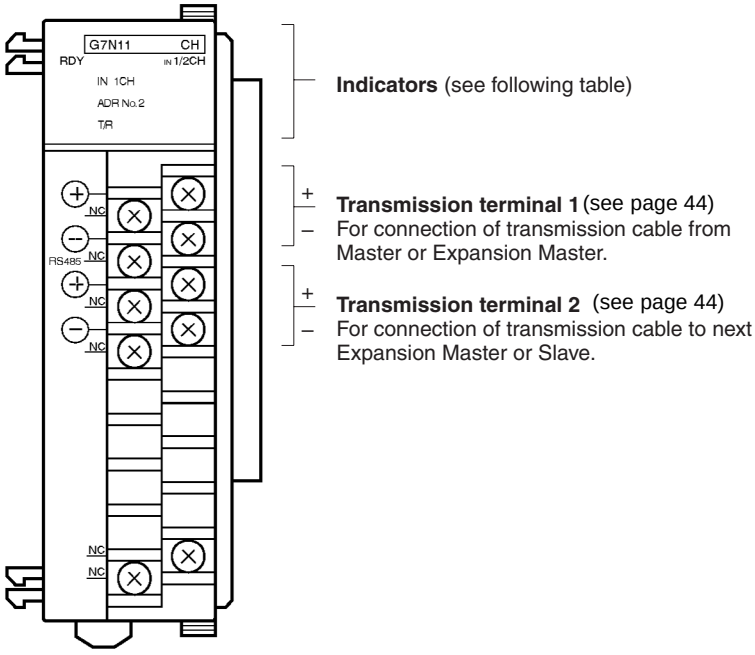

Terminal screws: M3
(Optimum tightening torque: 0.5 N • m)

Indicators

Name		Color	Function
RDY	Unit Ready	Green	Lit when power is on and if CQM1H/CQM1 recognizes a Master.
IN 1CH	IN Mode	Orange	Lit while number of inputs set to 1 word (16 points). Not lit when set to 2 words (32 points).
ADR No.2	Unit 2	Orange	Lit when Unit 2 set. Not lit when Unit 1 set.
T/R	Transmitting	Red	Flashes during transmission with power turned on. Lit when there is a transmission error. Not lit when there is an error in the Expansion Master.

CQM1-G7N01 Output Master

Front View

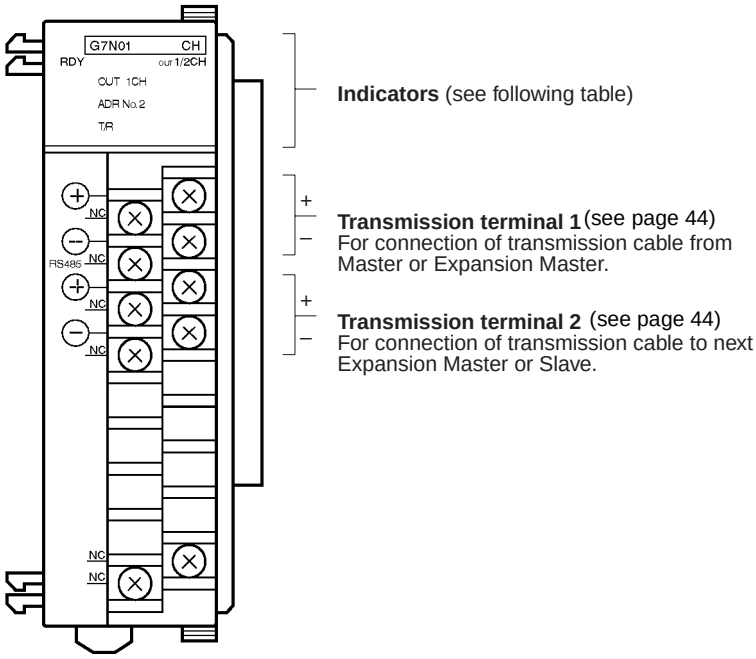

Terminal screws: M3
(Optimum tightening torque: 0.5 N • m)

Indicators

Name		Color	Function
RDY	Unit Ready	Green	Lit when power is on and if CQM1H/ CQM1 recognizes a Master.
OUT 1CH	OUT Mode	Orange	Lit while number of outputs set to 1 word (16 points). Not lit when set to 2 words (32 points).
ADR No.2	Unit 2	Orange	Lit when Unit 2 set. Not lit when Unit 1 set.
T/R	Transmitting	Red	Flashes during transmission with power turned on. Lit when there is a transmission error. Not lit when there is an error in the Expansion Master.

Note The positive and negative terminals of the transmission terminals 1 and 2 are shorted internally.
Transmission terminals 1 and 2 can be connected in any order.

2-2 Switch Settings

Remove the terminal block to expose the DIP switch underneath. Refer to the *CQM1H Operation Manual (W363) or the CQM1 Operation Manual (W226)* for the method of removing the terminal block.

Use a thin-tipped object, such as a small screwdriver, to set the switches.

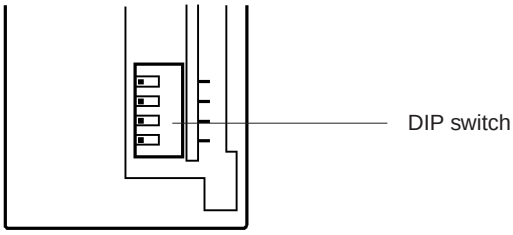

CQM1-G7M21 Master

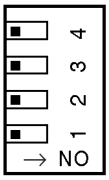

All pins are factory-set to OFF

OFF↔ON

Pin 4 Not used (set to OFF).

Pin 3 HOLD/HOLD OFF Setting:
Sets the HOLD/HOLD OFF function. This setting determines whether the signal input status to the CPU is held when a transmission error occurs (HOLD) or whether all input bits are cleared (HOLD OFF).

Setting	Description
ON	Signal input status held when a transmission error occurs (HOLD).
OFF	Signal input status cleared when a transmission error occurs (HOLD OFF).

Pin 2 Output Word Setting:
Sets the number of output words (points) occupied at the Master.

Setting	Description
ON	One word (16 points) of outputs.
OFF	Two words (32 points) of outputs.

Pin 1 Input Word Setting:
Sets the number of input words (points) occupied at the Master.

Setting	Description
ON	One word (16 points) of inputs.
OFF	Two words (32 points) of inputs.

Note 1. Even when selected, the HOLD function does not operate in the following cases:

Error in the Master (CPU out of control, etc.)	HOLD inoperative for Master and Expansion Masters.
Error in Expansion Master (CPU out of control, etc.)	HOLD operative for Master but inoperative for Expansion Masters.
Cable discontinuity between Master and Expansion Master	
Shorting in transmission route	

2. Disconnection between Slaves:
   HOLD operative for Slaves connected to Master. Inoperative for output Slaves after the discontinuity. These statuses determined by the output Slave HOLD/HOLD OFF setting.

CQM1-G7N11 Input Expansion Master

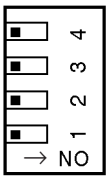

All pins are factory-set to OFF

OFF↔ON

Pins 3 and 4 Not used (set to OFF).

Pin 2 Expansion Master Unit # Setting:
Sets the Expansion Master Unit Number

Setting	Description
ON	Expansion Master is Unit 2
OFF	Expansion Master is Unit 1

Pin 1 Input Word Setting:
Sets the number of input words (points) occupied at the Expansion Master.

Setting	Description
ON	One word (16 points) of inputs.
OFF	Two words (32 points) of inputs.

Note

1. Turn the CQM1H/CQM1 power off before setting the DIP switch. The switch settings are enabled when the CQM1H/CQM1 power is turned on.
2. Use a different Unit number for each of the two Expansion Masters used with a single Master.
3. Slave address for Unit 2 can only be used for an 8-point or 16-point Slave. It cannot be used for a 4-point Slave.

CQM1-G7N01 Output Expansion Master

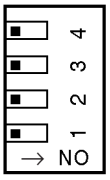

All pins are factory-set to OFF

OFF↔ON

Pins 3 and 4 Not used (set to OFF).

Pin 2 Expansion Master Unit # Setting:
Sets the Expansion Master Unit Number

Setting	Description
ON	Expansion Master is Unit 2
OFF	Expansion Master is Unit 1

Pin 1

Output Word Setting:
Sets the number of output words (points) occupied at the Expansion Master.

Setting	Description
ON	One word (16 points) of outputs.
OFF	Two words (32 points) of outputs.

Note

1. Turn the CQM1H/CQM1 power off before setting the DIP switch. The switch settings are enabled when the CQM1H/CQM1 power is turned on.
2. Use a different Unit number for each of the two Expansion Masters used with a single Master.
3. Slave address for Unit 2 can only be used for an 8-point or 16-point Slave. It cannot be used for a 4-point Slave.

SECTION 3
Connections

This section describes the connections between the G730 Interface Units and G730 Remote Terminals.

3-1 Transmission Cables 44
3-2 External Output Connection Cables 45

3-1 Transmission Cables

Connect wiring in series from the Master, with positive terminals connected together and negative terminals connected together.

Set the last connected Slave as the terminator. Do not set an intermediate Slave as a terminator.

Total cable length per system: 200 m max.

The size of terminal screw differs for the Master and Slave. Consider the size of the terminal screws when using solderless terminals.

Master terminal: M3 (optimum tightening torque: 0.5 N • m); Slave terminal: M3.5 (optimum tightening torque: 0.8 N • m)

Locate transmission cables away from power cables and high-voltage cables to eliminate the effects of noise.

Recommended Cables

The G730 Interface Unit can be connected to the G730 Remote Terminal using the following cable.

Cable: VCTF 0.75 x 2C

Master to Slave Connection

The connection method of a Master to Slaves is shown in the diagram below.

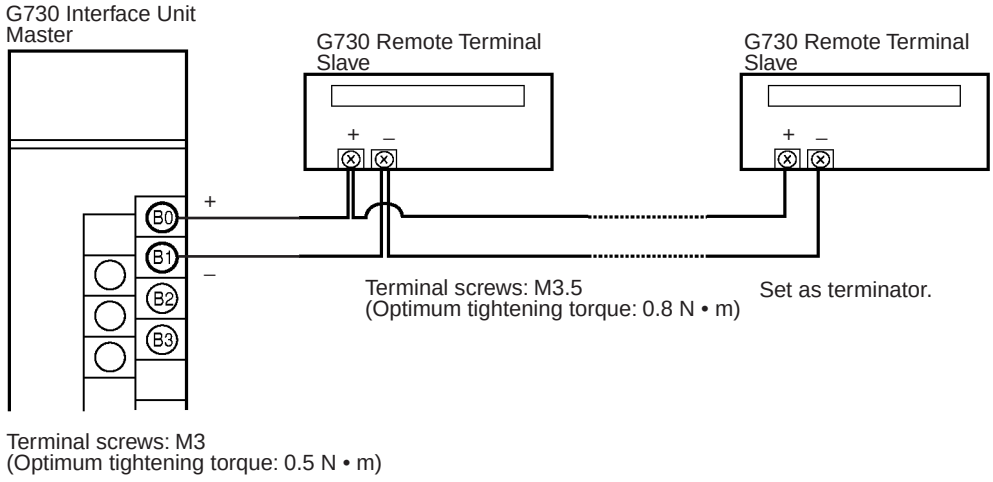

Master and Expansion Master to Slave Connection

The connection method of a Master and Expansion Master to Slaves is shown in the following diagram.

Connect wiring of each system in series from Master, Expansion Master to Slave with positive terminals connected together and negative terminals connected together.

Expansion Master terminals B0 to B2 and B1 to B3 are shorted internally. They can be used in any combination.

Set the last connected Slave as the terminator. Do not set an intermediate Slave as a terminator.

Total cable length per system: 200 m max.

The size of terminal screw differs for the Master/Expansion Master and Slave. Consider the size of the terminal screws when using crimped terminals.

Master/Expansion Master terminal: M3; Slave terminal: M3.5

Locate transmission cables away from power cables and high-voltage cables to eliminate the effects of noise.

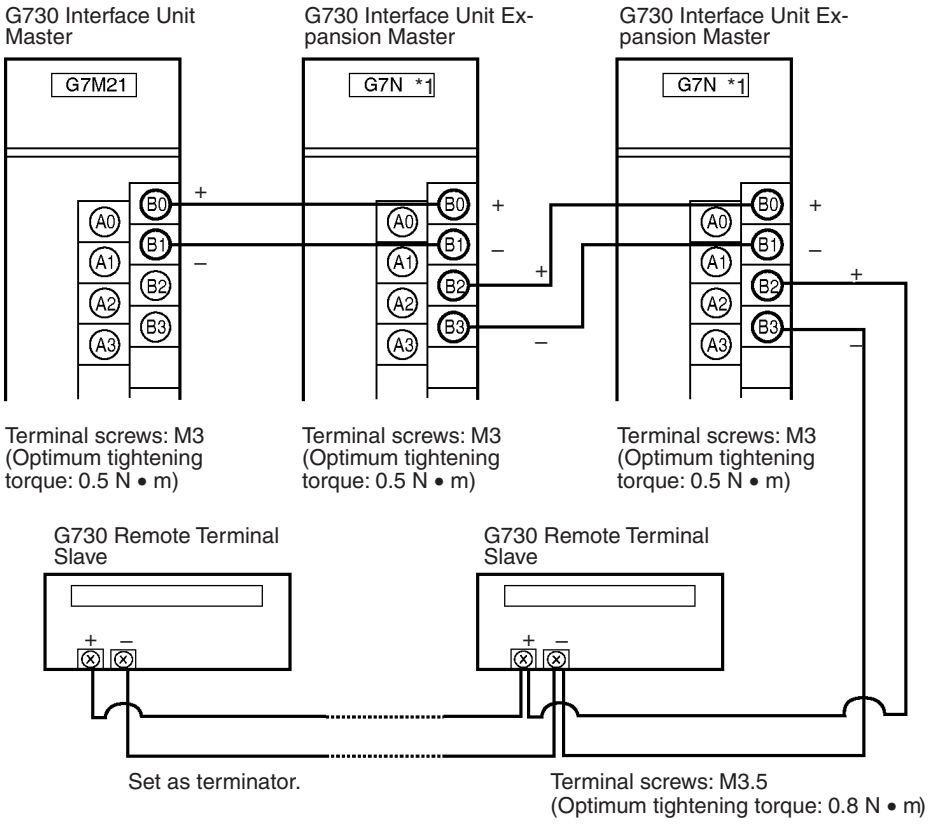

3-2 External Output Connection Cables

The G730 Interface Unit Master relay contact external outputs are the Transmission Ready output and ALM output.

Recommended Cables

The external outputs can be connected using the following cable.

Cable: AWG22 to 18 (0.3 to 0.75 mm^2)

Connections

Transmission Ready terminals are shorted when Transmission Ready status occurs.

Example of external output connections

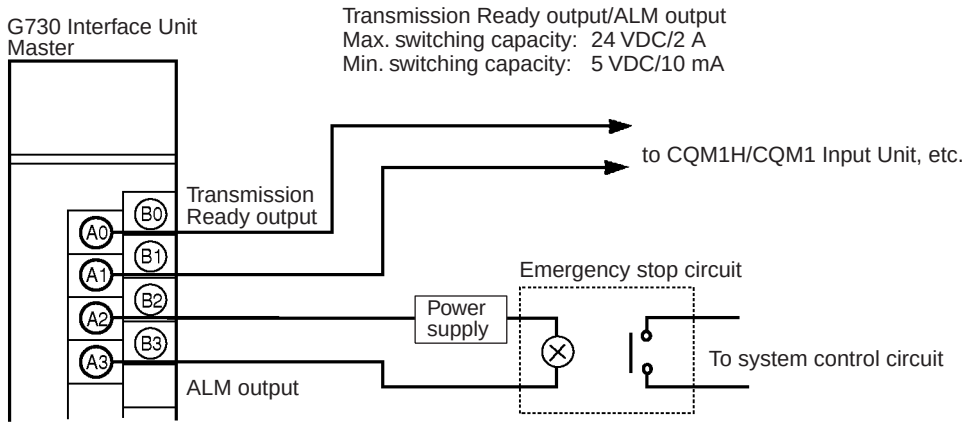

Terminal screws: M3
(Optimum tightening torque: 0.5 N • m)

The ALM output terminals are shorted if an error occurs in the output of a Unit with error detection function (G730-ROC04-A).

SECTION 4
Operation

This section provides the operational procedures for the G730 Interface Unit.

4-1 Word Allocation 48
4-1-1 CQM1H/CQM1 Word Allocation 48
4-1-2 Precautions 49
4-1-3 G730 Remote Terminal Allocation. 51
4-1-4 Word Allocation Example 53
4-2 Handling Power On. 54
4-3 Transmission Delay Time 54

4-1 Word Allocation

4-1-1 CQM1H/CQM1 Word Allocation

Number of I/O Words

The number of I/O words for the G730 Interface Unit Master and Expansion Master can be switched between 1 word and 2 words using the DIP switch. The number of I/O words set affects the word allocations and number of connected Slaves. Set the required number of words to suit the Slave I/O type, number of points, and number of Units.

Unit Number of Expansion Master

Up to two Expansion Masters can be connected to each Master. Set a unique Unit number for each Expansion Master using the DIP switch. Either Expansion Master can be set as Unit 2, but a Slave address for Unit 2 can only be used for an 8-point or 16-point Slave. It cannot be used for a 4-point Slave.

If only one Expansion Master is used, set it as Unit 1.

Word Allocation

Word addresses are allocated sequentially from left to right to all I/O and other mounted units, starting from 001 for inputs (000 is the CPU internal input) and from 100 for outputs, independent of the Master and Expansion Master Unit number.

In multiple systems (using multiple Masters), the word addresses are allocated to the inputs and outputs sequentially from the leftmost mounted unit, independent of the system number.

DIP Switch

Set the DIP switch before turning the CQM1H/CQM1 power on. The switch settings are enabled when the CQM1H/CQM1 power is turned on.

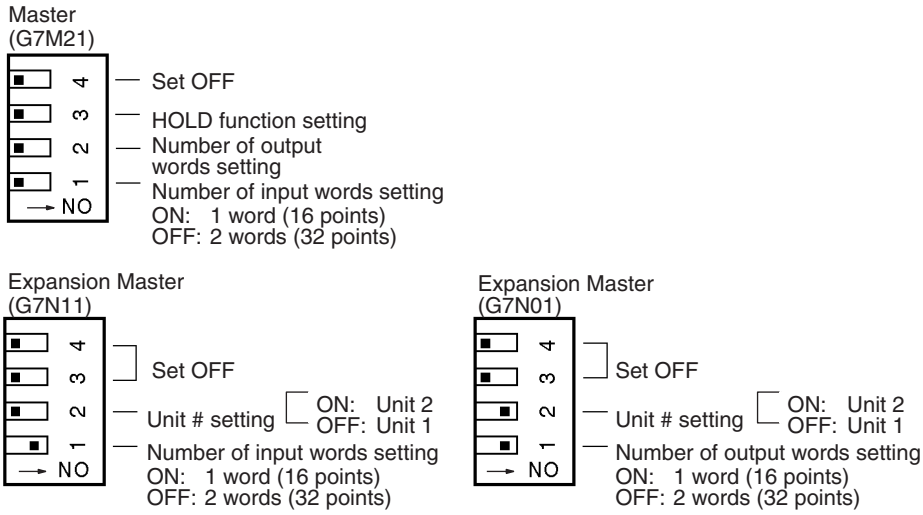

All pins are factory-set to OFF.

Example of Number of I/O Words and Unit No. Settings

The mounting positions of the Master and Expansion Master are not specified but the wiring must be connected in the order: Master to Expansion Master to Slave. The I/O addresses are allocated sequentially in the order the Units are mounted (refer to *4-1-2 Precautions*).

The Slave address for Unit 2 can only be used for an 8-point or 16-point Slave. It cannot be used for a 4-point Slave.

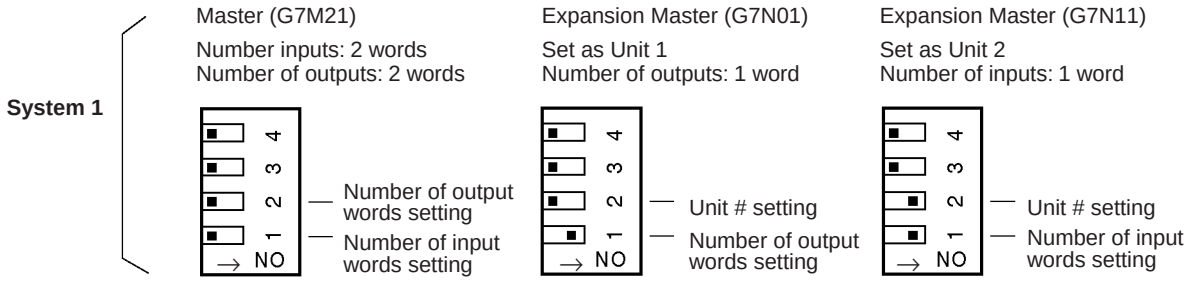

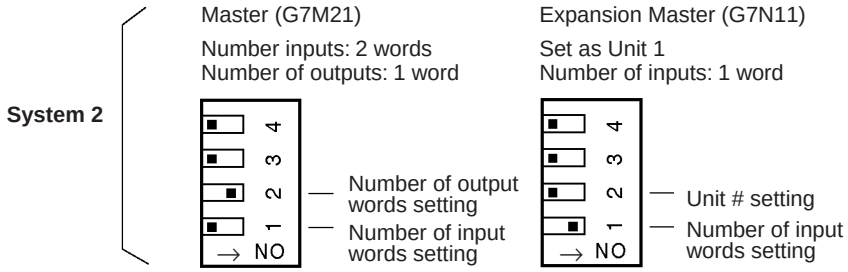

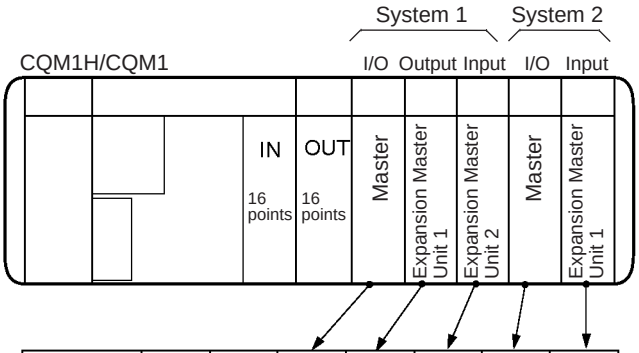

Unit	IN	OUT	M21	N01	N11	M21	N11
Input word	000		001 002		003	004 005	006
Output word		100	101 102	103		104	

4-1-2 Precautions

Avoid the following cases, which lead to complex word allocation and wiring connections.

Expansion Master Unit No. Out of Mounting Order

Take care of the allocation of Expansion Master Unit 1 and Unit 2 word addresses.

If one Expansion Master is used for input and another for output, take care that the Expansion Master Unit numbers and the Unit 1/Unit 2 Slave address settings are not reversed.

A 4-point Slave cannot be used as a Unit 2 Slave address.

Connect the transmission cables in series from the Master, regardless of the Unit number settings.

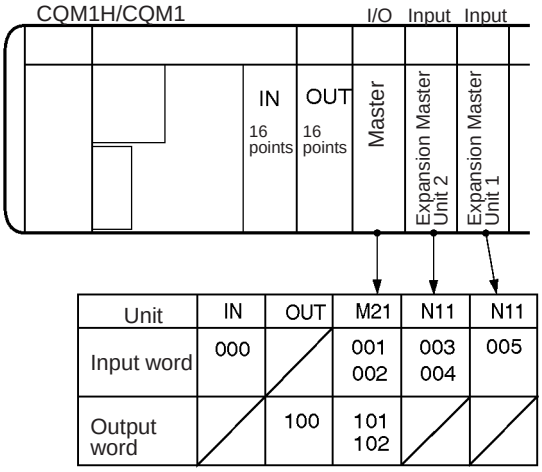

Unit	IN	OUT	M21	N11	N11
Input word	000		001 002	003 004	005
Output word		100	101 102		

Expansion Masters Mounted Left of the Master

Take care of the allocation of Master, Expansion Master Unit 1 and Unit 2 word addresses.

If one Expansion Master is used for input and another for output, take care that the Expansion Master Unit numbers and the Unit 1/Unit 2 Slave address settings are not reversed.

A 4-point Slave cannot be used as a Unit 2 Slave address.

Connect the transmission cables in series from the Master.

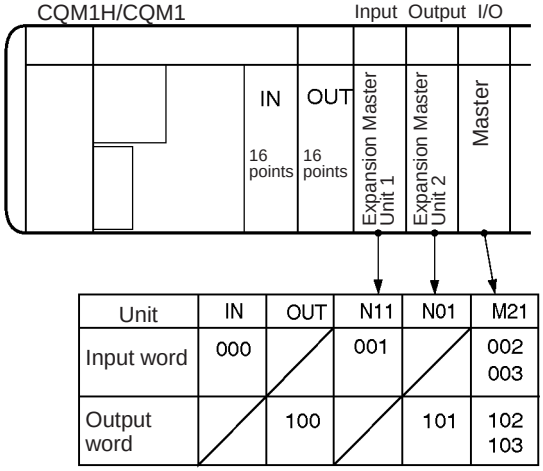

Unit	IN	OUT	N11	N01	M21
Input word	000		001		002 003
Output word		100		101	102 103

Additional Unit Mounted Between Master and Expansion Master or Between Two Expansion Masters

Take care of the allocation of Expansion Master word addresses.

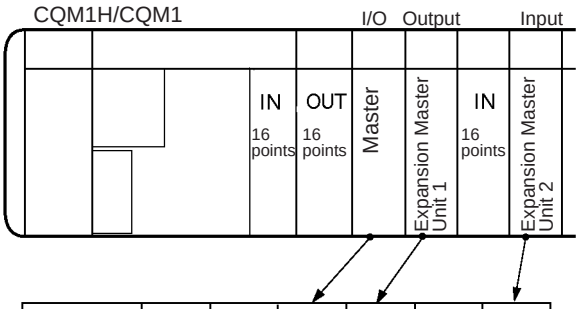

Unit	IN	OUT	M21	N01	IN	N11
Input word	000		001 002		003	004
Output word		100	101 102	103		

Master of Another System is Mounted Between the Master and Expansion Master or Between Two Expansion Masters of a System

Take care that the transmission cables of System 1 and System 2 are not wired together. Each system must be wired separately.

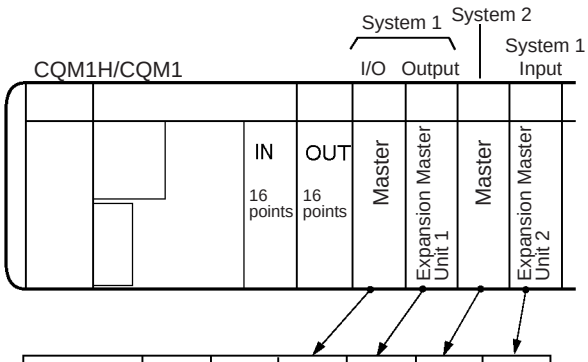

Unit	IN	OUT	M21	N01	M21	N11
Input word	000		001 002		003 004	005
Output word		100	101 102	103	104 105	

4-1-3 G730 Remote Terminal Allocation

Slave Address Allocation

Using one Master and two Expansion Masters in one system allows the connection of up to 28 Slaves (G730 Remote Terminals).

Use the DIP switch to set the Slave address for each Slave to a value from #0 to #27. Addresses #24 to #27 cannot be set for 4-point Slaves. The Master and Expansion Masters recognize the controlled Slave by the Slave address.

Relationship Between Master/Expansion Masters and Slave Address

The Slave addresses corresponding (i.e. controlled by) each Master/Expansion Master are shown in the table below.

The Slave addresses corresponding to each Master and Expansion Master Unit number are fixed.

Master/ Expansion Master	I/O type	Word	4-point Slave		8-point Slave		16-point Slave	
			Address	Bit	Address	Bit	Address	Bit
Master	Output	n	#0	00 to 03	#0	00 to 07	#0	00 to 15
			#1	04 to 07				
			#2	08 to 11	#2	08 to 15		
			#3	12 to 15				
		n+1	#4	00 to 03	#4	00 to 07	#4	00 to 15
			#5	04 to 07				
			#6	08 to 11	#6	08 to 15		
			#7	12 to 15				
	Input	m	#8	00 to 03	#8	00 to 07	#8	00 to 15
			#9	04 to 07				
			#10	08 to 11	#10	08 to 15		
			#11	12 to 15				
		m+1	#12	00 to 03	#12	00 to 07	#12	00 to 15
			#13	04 to 07				
			#14	08 to 11	#14	08 to 15		
			#15	12 to 15				
Expansion Master, Unit 1	Input (Output)	j	#16	00 to 03	#16	00 to 07	#16	00 to 15
			#17	04 to 07				
			#18	08 to 11	#18	08 to 15		
			#19	12 to 15				
		j+1	#20	00 to 03	#20	00 to 07	#20	00 to 15
			#21	04 to 07				
			#22	08 to 11	#22	08 to 15		
			#23	12 to 15				
Expansion Master, Unit 2	Input (Output)	k	Expansion Master Unit 2 is for 8-/16-point Slaves only. Do not set 4-point Slaves between #24 and #27.		#24	00 to 07	#24	00 to 15
					#25	08 to 15		
		k+1			#26	00 to 07	#26	00 to 15
					#27	08 to 15		

Note

1. Addresses n,m,j,k are the start addresses allocated in CQM1H/CQM1 for the Master or Expansion Master, as shown above.
2. Expansion Master Unit 2 is for 8-/16-point Slaves only. Do not set 4-point Slave addresses between #24 and #27.
3. If the number of I/O words for the Master and Expansion Master is set to 1 word (16 points), the corresponding Slave address (n+1), (m+1), (j+1), (k+1) (the shaded areas) are invalid. An error results if these settings are incorrect. In particular, if the Master output is set to 1 word but the output Slave address is mistakenly set between #4 and #7, the Slave outputs the same data as the n address. All Slave outputs corresponding to the Expansion Master are OFF (0).
4. The following bits are allocated as Master and Expansion Master addresses and cannot be used by the Slaves.
   Input bits: always OFF
   Output bits: can be used as work bits

4-1-4 Word Allocation Example

In this example, the Master and output Expansion Master Unit 1 are set to 2 words and the Slaves comprise five 16-point Units and two 4-point Units. The Slave I/O bit addresses corresponding to Unit I/O words and Slave address allocations are shown in the table below.

I/O type	CPU internal input word	Master word	Slave address	Expansion Master Unit 1 word	Slave address
Output	---	100	#0 (16-point output model)	102	#16, #17 (two 4-point Output Units)
		101	#4 (16-point output model)	103	#20 (16-point Output Unit)
Input	000	001	#8 (16-point input model)	---	
		002	#12 (16-point input model)		

In the following example, the Slaves are connected in order of ascending Slave address. However, the connection order is independent of the Slave address. The only requirement is that they are connected in series.

Set the Slave connected at the end as the terminator, regardless of its Slave address.

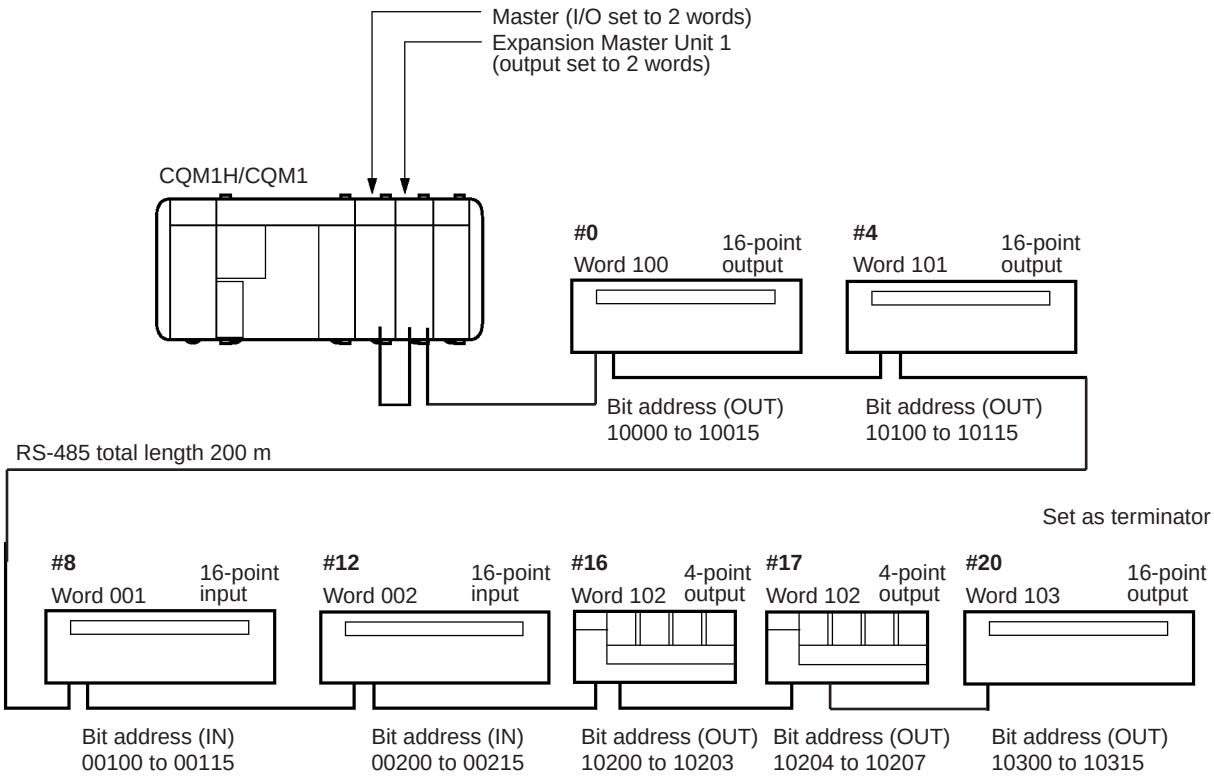

4-2 Handling Power On

After the power is turned on, the Master takes several seconds to recognize all the Slaves. To start operation immediately at power on, write a program for CQM1H/CQM1 to read the Transmission Ready signal and to wait until the Transmission Ready signal turns ON.

The Master Transmission Ready signal is connected to CPU internal input bit 00000 and is used as a virtual flag by the Output Ready flag in the work bits (02000).

Program Example

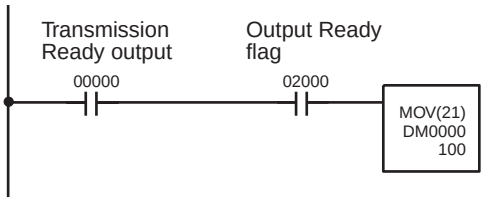

The contents of DM 0000 is output to the Slave at address 100 when the Output Ready flag and the Transmission Ready signal from the Master are ON simultaneously.

Connection Example

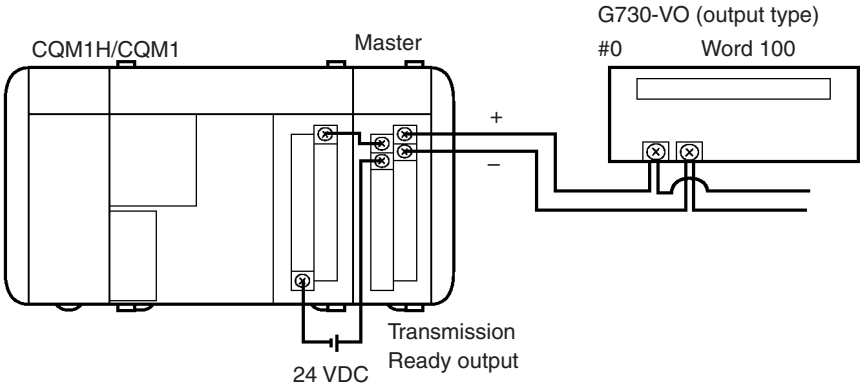

Note It takes 1 s max. for the Transmission Ready output to turn OFF after a transmission error occurs during normal operation.

On a transmission error, the CPU input and Slave output is determined by the HOLD function setting of each Unit.

4-3 Transmission Delay Time

The transmission delay time arises because the G730 Interface Unit communications is conducted by polling from the Master to the Expansion Masters and Slaves.

The maximum transmission delay time (Tmax) is calculated using the following formula.

Calculation of Transmission Delay Time

Maximum transmission delay time (Tmax):

Tmax = ((no. Slaves + no. Expansion Masters + 2) x 1.2 x 2) + Slave I/O ON/OFF delay time (ms)

This calculation does not include the response times between the CQM1H/CQM1 and units.

Refer to the *CQM1H Operation Manual (W363) or the CQM1 Operation Manual (W226)* for details about the CQM1H/CQM1 and unit response times. Refer to *I/O Terminal Series Catalog (X044)* for details about the Slave I/O ON/OFF delay times.

For the system shown in the word allocation example on page 53, the time (Tmax) between the input type Slave input signal turning ON, being read by the Slave, and then being read by CQM1H/CQM1 from the Master is calculated as follows (assuming the Slave input ON delay time is 1.5 ms.).

Example calculation of transmission delay time:

The maximum transmission delay time (Tmax) for a system comprising seven Slaves and one Expansion Master is Tmax = (7+1+2) x 1.2 x 2 + 1.5 = 25.5 ms.

Reducing Transmission Delay Time

The transmission delay time can be reduced by replacing a large system using multiple Expansion Masters with multiple Masters configured as separate systems.

Existing System

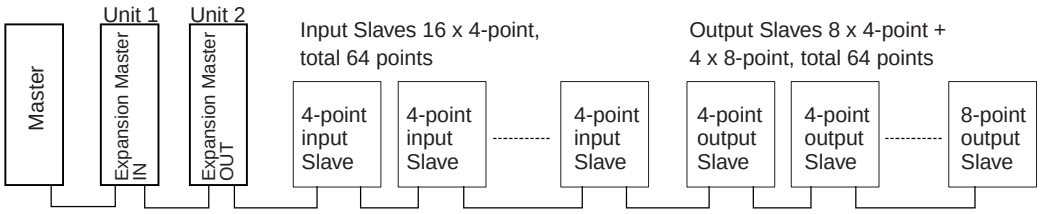

Transmission delay time (Slave I/O delay time = 1.5 ms)
Tmax = ((28+2+2) x 1.2 x 2) + 1.5 = 78.3 ms

Modified System

System 1

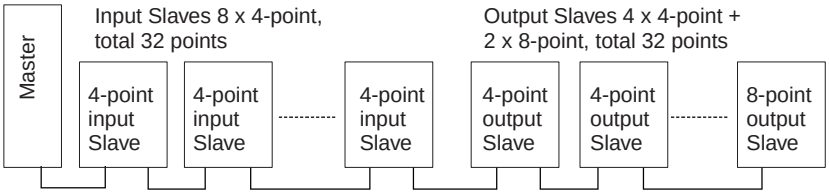

System 2

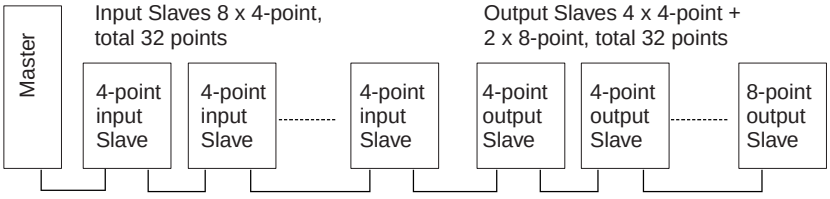

Transmission delay time (Slave I/O delay time = 1.5 ms)
Tmax = ((14+0+2) x 1.2 x 2) + 1.5 = 39.9 ms

Using one 16-point Unit instead of two 8-point Units reduces the number of Units, and therefore decreases the transmission delay time.

Appendix A
Specifications

Standard Specifications

The standard specifications of the G730 Interface Units conform to those of the CQM1H/CQM1 PC.

Communications Performance Specifications

Item	Specification
Communications method	Two-wire, semi-duplex
Synchronization method	Start-stop
Transmission path	2-core cable (VCTF 0.75 X 2 C is recommended)
Interface	RS-485
Transmission speed	187.5 kbps
Transmission distance	200 m max (total per system)

Performance Specifications - Master

CQM1-G7M21

Item	Specification
I/O points	Input: 2 words (32 points)/1 word (16 points) Output: 2 words (32 points)/1 word (16 points) Set with DIP switch.
External output	Transmission Ready output: G6D, SPST-NO, 24 VDC/2 A max. ALM output
Internal current consumption	250 mA at 5 VDC
Weight	250 g max.
Dimensions	32 (W) x 110 (H) x 107 (D) mm

Performance Specifications - Input Expansion Master

CQM1-G7N11

Item	Specification
I/O points	Input: 2 words (32 points)/1 word (16 points) Output: 2 words (32 points)/1 word (16 points) Set with DIP switch.
Internal current consumption	80 mA at 5 VDC
Weight	200 g max.
Dimensions	32 (W) x 110 (H) x 107 (D) mm

Performance Specifications - Output Expansion Master

CQM1-G7N01

Item	Specification
I/O points	Input: 2 words (32 points)/1 word (16 points) Output: 2 words (32 points)/1 word (16 points) Set with DIP switch.
Internal current consumption	80 mA at 5 VDC
Weight	200 g max.
Dimensions	32 (W) x 110 (H) x 107 (D) mm

Dimensions

Common for Master and Expansion Master.

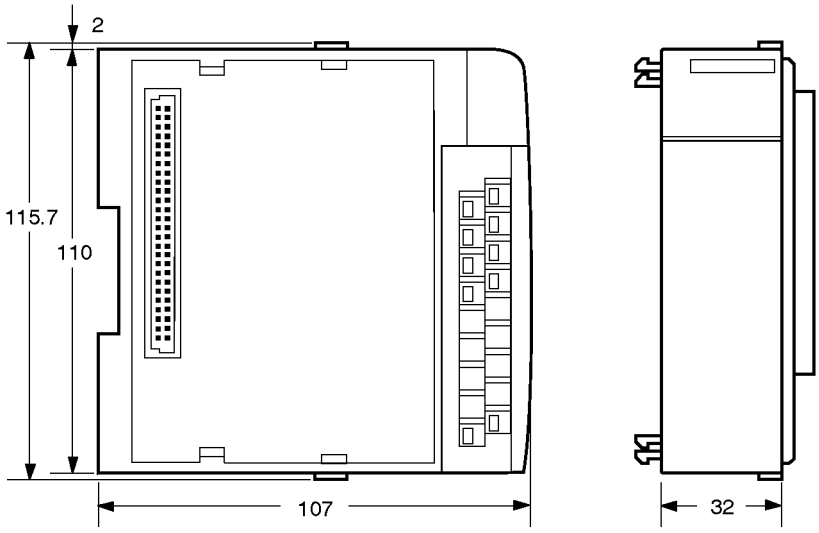

Unit: mm

Appendix B

Troubleshooting

Indicator Status During Normal Operation

❍: Lit, ▲: Flashing, X: Not lit

Master						Expansion Master		Slave		Comments
RDY	T/R RDY	T/R	END	NODE	ALM	RDY	T/R	PWR	T/R	
❍	❍	▲	X	X	X	❍	▲	❍	▲	All T/R indicators flash.

Any other indicator display indicates an error. Refer to the table below.

Indicator Alarm Table

The table below shows the description and remedy of an error occurring in the G730 Interface Unit.

❍: Lit, ▲: Flashing, X: Not lit, "—": Status not relevant.

Error	Master						Expansion Master		Description	Remedy
	RDY	T/R RDY	T/R	END	NODE	ALM	RDY	T/R		
Errors before or after normal operation	X	—	—	—	—	–	X	—	Power not turned on.	Turn the power on.
									Units not completely connected. End cover not attached.	Refer to unit manual and correct set up.
	—	X	X	X	X	X	—	—	Abnormal Master.	Turn power off and back on. Replace Master if same error re-occurs.
Errors before normal operation	❍	X	▲	❍	❍X	—	❍	❍	Slave address set between #28 and #30.	Set Slave address between #0 and #27.
	❍	X	▲	❍	X	—	❍	❍	No terminator set.	Set the Slave connected at the end as the terminator.
									Multiple terminators exists in a system.	Only one terminator allowed per system. Wire separate systems with one Master each.
									Different types of communications Master exist.	Do not mix Master (G7M21) with different types of communications Master.
									Transmission path shorted. Transmission path discontinuity. Transmission path + and – wiring reversed.	Correctly wire the transmission path.
									Expansion Masters exist with the same input/output type and duplicate unit #.	Correct settings to give unique unit # and Slave address.
									Expansion Masters exist with the same input/output type and duplicate system address.	
									The Slave set as terminator is not turned on.	Turn on the terminator Slave.
									The terminator is set to Slave address #31.	Set terminator Slave address between #0 and #27.
	❍	X	▲	▲	X	—	❍	❍	Multiple terminators set	Set only the final Slave to terminator.

Error	Master						Expansion Master		Description	Remedy
	RDY	T/R RDY	T/R	END	NODE	ALM	RDY	T/R		
Errors before normal operation	❍	❍	▲	X	▲	—	❍	▲	Input/output type of Master/ Expansion Master differs from input/output type of the corresponding Slave.	Match input/output type of Master/Expansion Master to input/ output type of the corresponding Slave.
									Expansion Masters exist with different input/output type but duplicate unit #.	Expansion Masters exist with different input/output type but duplicate Slave address.
									Correct settings to give unique unit # and Slave address.	
									A 4-point unit is set between #24 and #27.	The #24 to #27 area is reserved for 8-point and 16-point units. Set 4-point units between #0 and #23.
		Transmission to Slaves whose addresses are set correctly is possible for this display status. Slaves with errors can be identified by checking the T/R indicators, which will be lit on Slaves with errors.							The Slave address of an 8-point unit is set to an odd value between #0 and #23. The Slave address of a 16-point unit is set to an odd value between #0 and #27.	Refer to Word Allocations and correct the Slave address.
									Duplicate bit addresses set for 4-, 8-, and 16-point units.	
Errors after normal operation	❍	X	❍	X	—	—	❍	❍▲	Transmission path shorted. Transmission path discontinuity.	Correctly wire the transmission path.
								X	Power off at Slave.	Turn on the Slave power supply.
									Slave CPU out of control	Turn Slave power off and back on. Replace Slave if same error re-occurs.
	❍	❍	▲	X	X	❍	❍	▲	Error occurred in the output of a Slave with error detection function.	Replace defective relay or normally return load line.

Note The error check shown in the table above is conducted when the CQM1H/CQM1 is turned on (even if the CQM1H/CQM1 is not in RUN mode). The indicator display on the CQM1H/CQM1 CPU is unrelated to the indicator display on the G730 Interface Unit.

System Error

The error shown below is a CQM1H/CQM1 error which prevents CQM1H/CQM1 operation.

Error	Description	Cause	Remedy
I/O Unit overflow	An I/O overflow error occurred in the CPU.	The total number of I/O words in the system exceeds the maximum I/O words of the CPU.	Correct the system, referring to *1-2 System Configuration* and *4-1 Word Allocation*.

Operation Flowchart and Indicator Status

The indicator status are shown below after CQM1H/CQM1 power on, during normal operation, and after an error.

Status	Master						Expansion Master	
	RDY	T/R RDY	T/R	END	NODE	ALM	RDY	T/R
CQM1H/CQM1 power on	X	X	X	X	X	X	X	X
CQM1H/CQM1 initial check OK	❍	X	▲	❍	X	X	❍	X
G730 transmission line check – terminator found	❍*	❍*	▲*	X*	X*	X*	❍*	▲*

Note *Normal operation status

Errors	Master						Expansion Master	
	RDY	T/R RDY	T/R	END	NODE	ALM	RDY	T/R
I/O word setting error I/O unit overflow Defective CQM1H/CQM1 unit connection No end cover CQM1H/CQM1 initial check NG	X*	—	—	—	—	—	X	—
Master unit error	—	X	X	X	X	X	—	—
Slave set between #28 and #30.	❍	X**	▲	❍**	❍**(X)	—	❍	❍**
Incorrect transmission path setting.	❍	X**	▲	❍**	X	—	❍	❍**
Terminator not turned on.	❍	X**	▲	❍**	X	—	❍	❍**
Duplicate terminator setting.	❍	X**	▲	▲**	X	—	❍	❍**
Duplicate Expansion Master Unit #. Slave address setting error	❍ ❍	X** ❍	▲ ▲	❍** X	X** ▲	—	❍ ❍	❍** ▲
Transmission path shorted/discontinuity	❍	X**	❍**	X	—	—	❍	❍**(▲)
Slave power off/CPU out of control	❍	X**	❍**	X	—	—	❍	X**
Output error from Slave with error detection function.	❍	❍	▲	X	X	❍**	❍	▲

Note Indicators shown with "**" differ from normal status.

PART III
I/O Link Unit
CQM1-LK501

SECTION 1
Features and System Configuration

This section describes the general features, system configuration, and word allocation of the CQM1-LK501 I/O Link Unit.

1-1 Features 66
1-2 System Configuration 66
1-3 Connecting Devices 66
1-3-1 CPU. 66
1-3-2 Remote I/O Master 67
1-4 Word Allocation 67
1-4-1 CQM1H/CQM1 Word Allocation 67
1-4-2 Master Word Allocation 68

1-1 Features

- The CQM1-LK501 I/O Link Unit can communicate with other PCs via I/O points connected to the SYSMAC BUS Wired Remote I/O System.
- The CPU treats the CQM1-LK501 I/O Link Unit as an I/O Unit with 32 input and 32 output points so that the user can communicate with remote PCs with ease.

The SYSMAC BUS Wired Remote I/O System connects remote I/O devices and PCs. The SYSMAC BUS Wired Remote I/O System saves wiring effort because each PC is connected over a single wire. The CQM1-LK501 I/O Link Unit makes PC communications possible via I/O points in the SYSMAC BUS Wired Remote I/O System. Refer to *SYSMAC C-series Rack PCs Wired Remote System Manual (W120)* for details on the SYSMAC BUS system.

1-2 System Configuration

The following is a CQM1H/CQM1 system configuration example with CQM1-LK501 I/O Link Units.

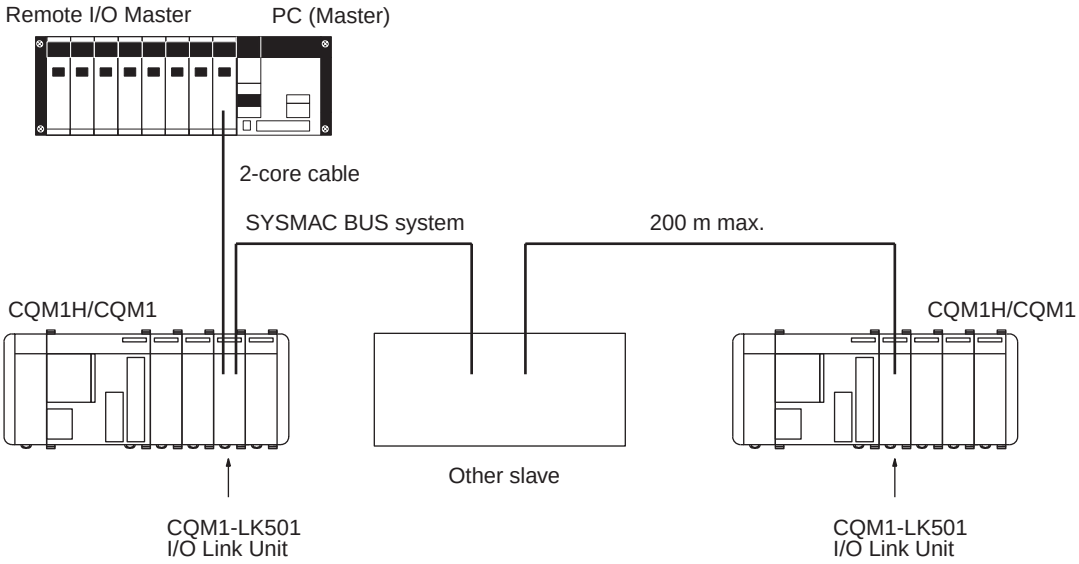

1-3 Connecting Devices

1-3-1 CPU

The CQM1-LK501 I/O Link Unit connects to the following CPUs

Name	Model
CQM1H-series CPU	CQM1H-CPU11
	CQM1H-CPU21
	CQM1H-CPU51
	CQM1H-CPU61
CQM1-series CPU	CQM1-CPU11-E CQM1-CPU21-E CQM1-CPU41-EV1 CQM1-CPU42-EV1 CQM1-CPU43-EV1 CQM1-CPU44-EV1

1-3-2 Remote I/O Master

The CQM1-LK501 I/O Link Unit connects to the following SYSMAC BUS Master Units.

Model	PC
C500-RM201	C2000H C1000H (F) C500 (F) CV2000 CV1000 CV500 CVM1
C200H-RM201	C200H/C200HS C200HX/HG/HE

1-4 Word Allocation

The CQM1-LK501 I/O Link Unit is allocated two output and two input words.

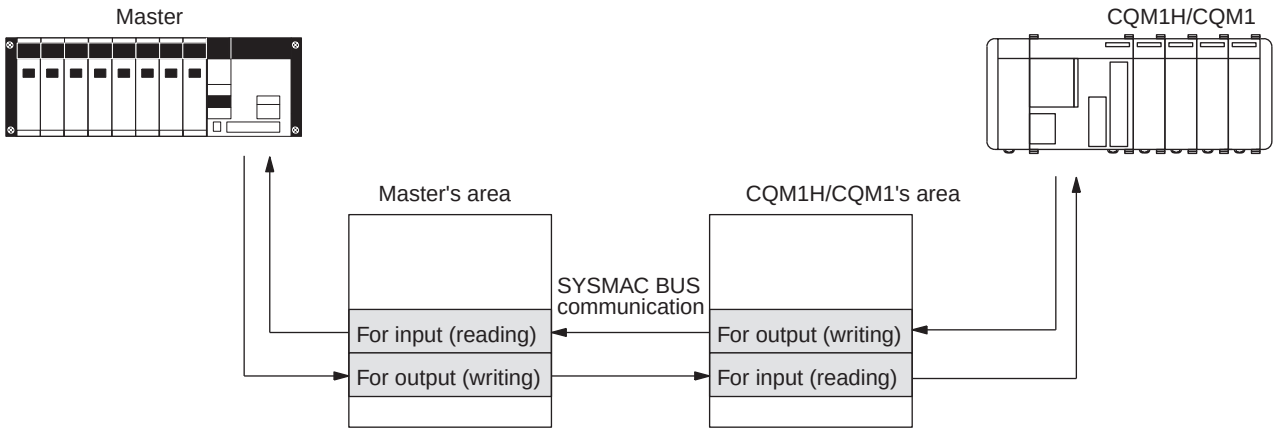

1-4-1 CQM1H/CQM1 Word Allocation

The CQM1H/CQM1 treats the CQM1-LK501 I/O Link Unit as an I/O Unit with two output and two input words, to which words are allocated from the left for both input and output. Words from 000 are allocated for input and words from 100 are allocated for output.

1-4-2 Master Word Allocation

The Master treats the CQM1-LK501 I/O Link Unit as a SYSMAC BUS Remote I/O Slave Unit. Words are allocated to the SYSMAC BUS area and specified by the Master in the same way as other SYSMAC BUS Remote I/O Slave Units. All words to be used in the SYSMAC BUS area are set using the DIP switch of the CQM1-LK501 I/O Link Unit as shown in the following figure.

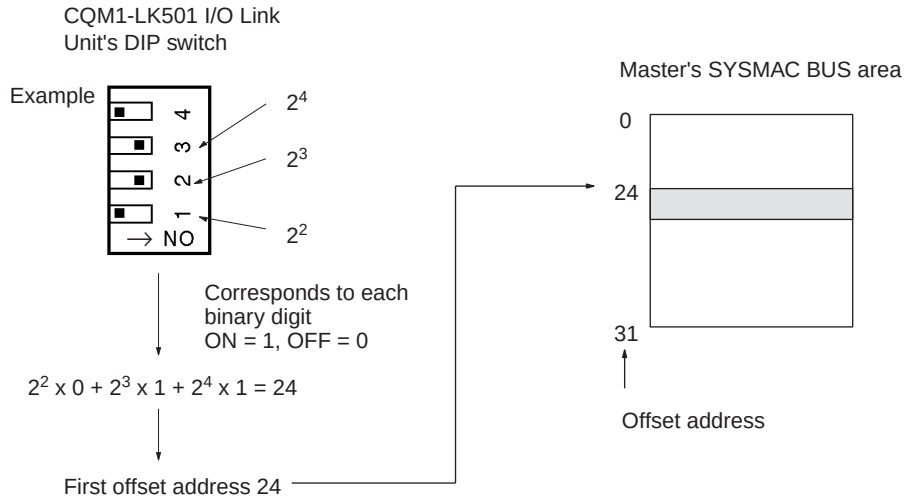

The first word of the Master's SYSMAC BUS area varies with the model as seen in the following table.

Model	SYSMAC BUS area first word
C200H/C200HS C200HX/HG/HE	Word 200
C500 (F)	Word 0
C1000H (F) C2000H	Word 32x (Master base number)
CV2000 CV1000 CV500 CVM1	Word 2300 + 32x (Master base number)

SECTION 2
Nomenclature and Settings

This section provides the nomenclature and switch settings for the CQM1-LK501 I/O Link Unit.

2-1 Nomenclature 70
2-2 Switch Settings 71

2-1 Nomenclature

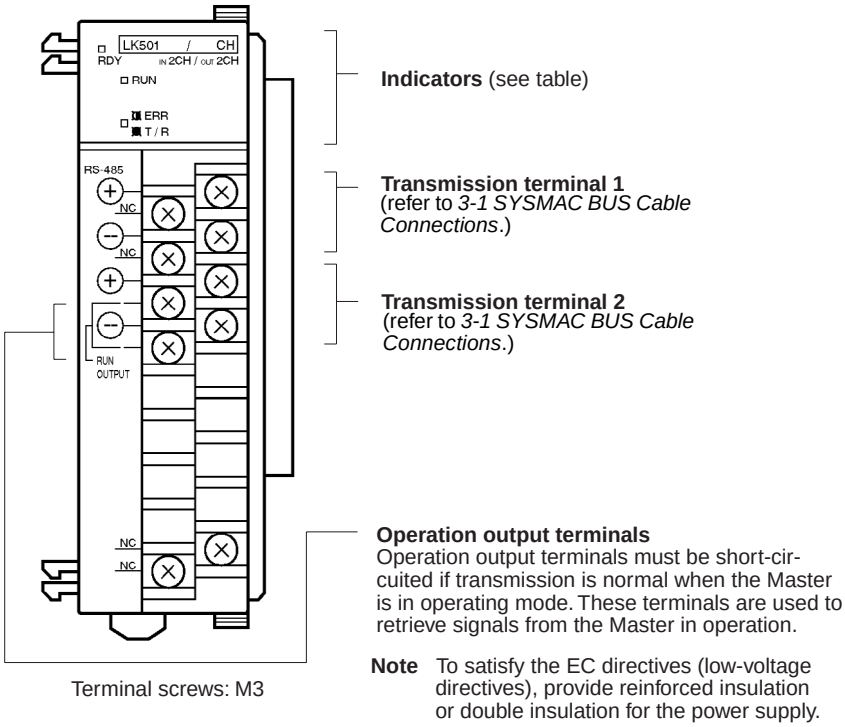

Indicators

Name	Color	Function
RDY	Green	Lit while the CQM1H/CQM1 is supplied with power.
RUN	Green	Lit when the Master is in operating mode.
ERR T/R	Red	Lit when there is a transmission error. Flashes during normal transmission.

The terminator setting switch and DIP switch are located under the terminal board.

The ERR T/R indicator is lit only when there is an error is and will flash automatically when the transmission returns to normal.

2-2 Switch Settings

There is a terminator setting switch and DIP switch under the terminal board. To disconnect the terminal board, refer to the *CQM1H Operation Manual (W363) or the CQM1 Operation Manual (W226)*. Use a small flat-blade screwdriver for setting the terminator setting switch and DIP switch.

Terminator Setting Switch

The terminator setting switch of the CQM1-LK501 I/O Link Unit mounted to the CQM1H/CQM1 located at the end of the SYSMAC BUS system must be set to ON.

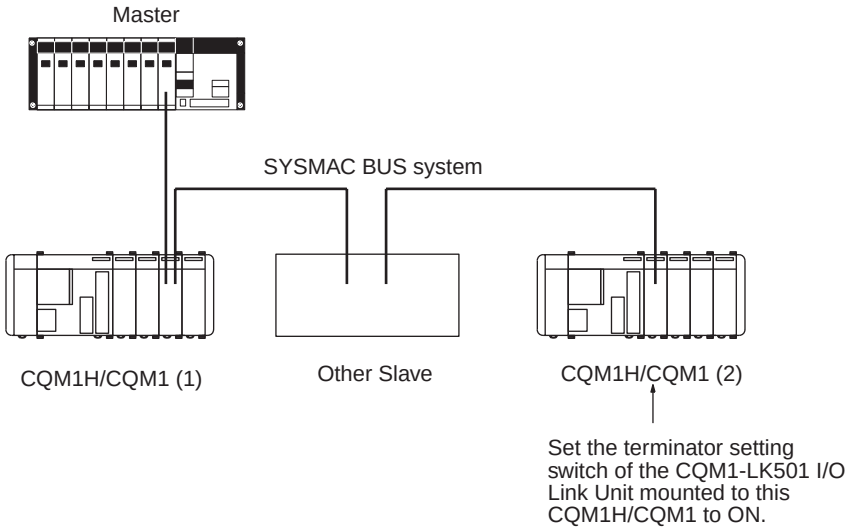

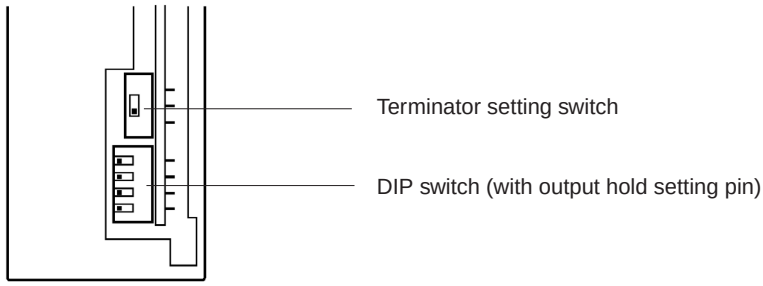

Output Hold Setting Pin

If this pin is set to OFF, when an error has occurred, the CQM1H/CQM1's output word (i.e., the Master's write word) will hold the value just before the error has occurred. If this pin is set to ON, the value will be cleared.

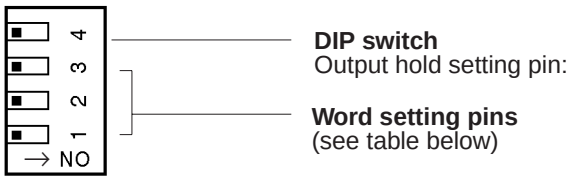

Word Setting

Switch		Setting							
3 (x 2^4)		0	0	0	0	1	1	1	1
2 (x 2^3)		0	0	1	1	0	0	1	1
1 (x 2^2)		0	1	0	1	0	1	0	1
Word allocation of Master	Output	Words +0, 1	Words +4, 5	Words +8, 9	Words +12, 13	Words +16, 17	Words +20, 21	Words +24, 25	Words +28, 29
	Input	Words +2, 3	Words +6, 7	Words +10, 11	Words +14, 15	Words +18, 19	Words +22, 23	Words +26, 27	Words +30, 31

Example

If pins 1 and 2 are set to OFF and pin 3 is set to ON on the CQM1-LK501 I/O Link Unit, and the CQM1-LK501 I/O Link Unit is connected to the C200H Remote I/O Master, the following words will be allocated on the C200H.
Output: words 216 and 217
Input: words 218 and 219

SECTION 3
Connections

This section describes the SYSMAC BUS cable connections for the CQM1-LK501 I/O Link Unit.

3-1 SYSMAC BUS Cable Connections 74

3-1 SYSMAC BUS Cable Connections

Connect VCTF 0.75 x 2 C SYSMAC BUS cables to the CQM1-LK501 I/O LInk Unit as shown in the following.

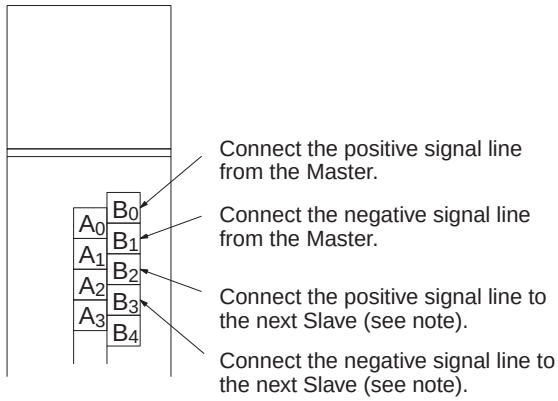

Note Nothing is connected to these terminals in the case of the terminator.

Connect the Master and Slaves as described in the following.

The positive terminal of the Master must be connected to the positive terminal of the Slave and the negative terminal of the Master must be connected to the negative terminal of the Slave, and between Slaves, the positive terminals must be connected together and the negative terminals must be connected together as shown in the above diagram.

The end Slave of the system must be the terminator of the system. Any other Slave must not be the terminator.

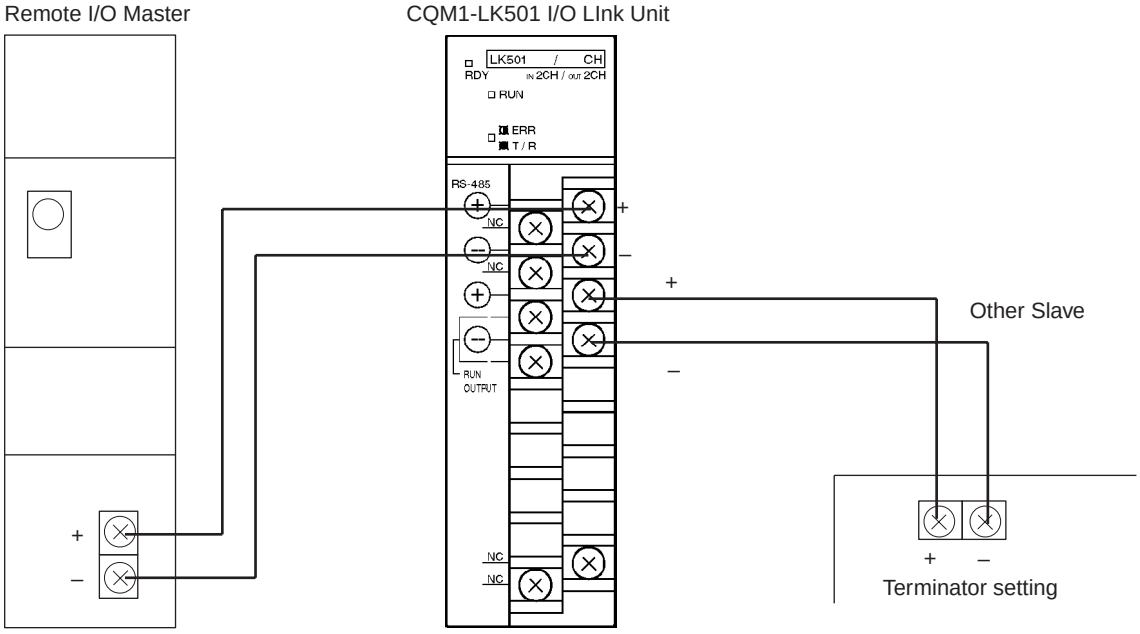

Note

1. Connect the terminals with crimp-style terminals and M3 terminal screws that are also used for CQM1H/CQM1 I/O Units.
2. Terminals B_0 and B_2 are short-circuited internally. Terminals B_1 and B_3 are also short-circuited internally.
3. Be sure to turn all the Slaves on before turning on the Master. Any Slave turned on after the Master is turned on will not be recognized by the Master.

4. To satisfy the EC directives (low-voltage directives), provide reinforced insulation or double insulation for the power supply when RUN OUTPUT is used.

Appendix A
Specifications

Standard Specifications

The standard specifications of the CQM1-LK501 I/O Link Unit conform to those of the CQM1H/CQM1 PC.

SYSMAC BUS Standard Specifications

Item	Specification
Transmission method	Time-division multiplex cyclic
Communication method	Two-wire semi-duplex
Transmission path	2-core cable (VCTF 0.75 x 2 C is recommended)
Interface	RS-485
Transmission speed	187.5k bps
Transmission distance	200 m max.

Performance Specifications

Item	Specification
Name	I/O Link Unit
Model	CQM1-LK501
Current consumption	150 mA at 5 VDC
I/O delay	8 ms/64 points
I/O points	64 points (32 input points and 32 output points)
External output	Operating output: G6D, SPST-NO, 2 A max.
Diagnostic function	• Transmission error check (BCC + inverted double transmission collation) • CPU error monitor • Transmission path error check
Weight	220 g max.
Dimensions	32 x 110 x 107 (W x H x D)

Dimensions

These dimensions are the same for all G730 Interface Unit models.

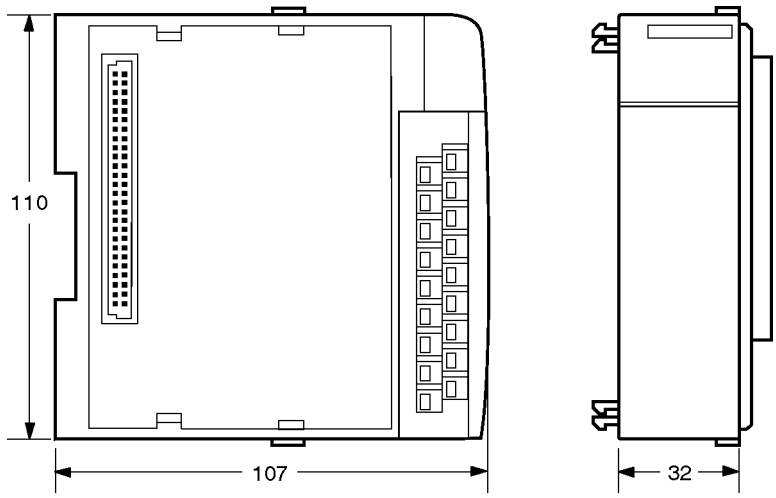

(Unit: mm)

PART IV
Analog Input Unit and Analog Power Supply Units

CQM1-AD041

CQM1-IPS01

CQM1-IPS02

SECTION 1
Features and System Configuration

This section provides the features and system configuration relating to the Analog Input Unit and Analog Power Supply Units.

1-1 Features 82
1-1-1 Analog Input Unit 82
1-1-2 Analog Power Supply Units 82
1-2 System Configuration 83
1-3 Connecting Devices 83
1-3-1 CPU. 83
1-3-2 Analog Power Supply Units 83
1-4 System Construction 84
1-4-1 Total Number of I/O Words 84
1-4-2 Total Current Consumption 84

1-1 Features

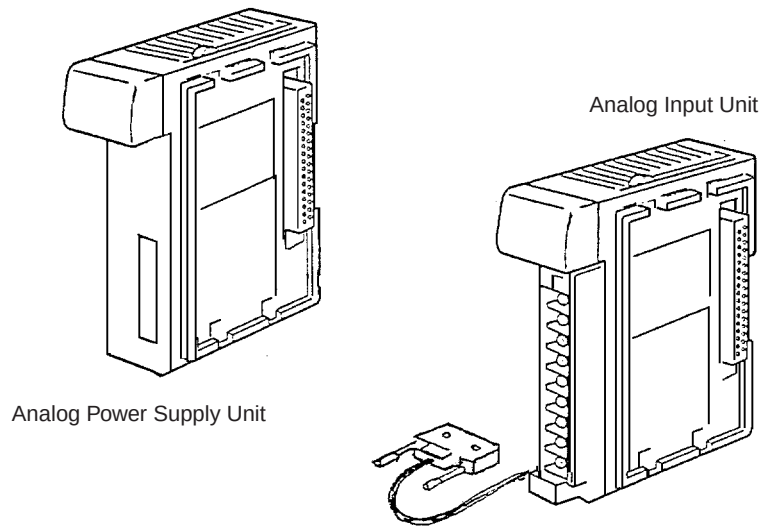

1-1-1 Analog Input Unit

- The CQM1-AD041 is a SYSMAC CQM1H/CQM1-series Analog Input Unit that converts analog signals into digital signals.
- A single Analog Input Unit converts 4-point analog input into 12-bit digital output. It is possible to reduce the number of input words that the Analog Input Unit occupies by limiting the number of the Analog Input Unit's input points to a maximum of two. Refer to *page 87 DIP Switch Functions* for details.
- Converted data is stored in the input word allocated to the Analog Input Unit. The converted data is used by just reading the contents of the input word. Refer to *3-2-1 Word Allocation* for details.
- The Analog Input Unit has input signal voltage ranges of –10 to 10 V, 0 to 10 V, and 1 to 5V, any of which can be combined freely with the CQM1-AD041's input signal current range of 4 to 20 mA.
- The Analog Input Unit incorporates a mean value processing function so that it outputs stable conversion data.
- The Analog Input Unit incorporates a broken wire detecting function, with which the Analog Input Unit detects the disconnection of any input wire that has been connected to the Analog Input Unit given the input range is 4 to 20 mA or 1 to 5 V.

1-1-2 Analog Power Supply Units

- The CQM1-IPS01 and CQM1-IPS02 are Analog Power Supply Units for the Analog Input Unit.
- The CQM1-IPS01 connects to a single Analog Input Unit.
- The CQM1-IPS02 connects to a maximum of two Analog Input Units.

1-2 System Configuration

The Analog Input Unit is mounted to the CQM1H/CQM1 CPU as shown in the following illustration.

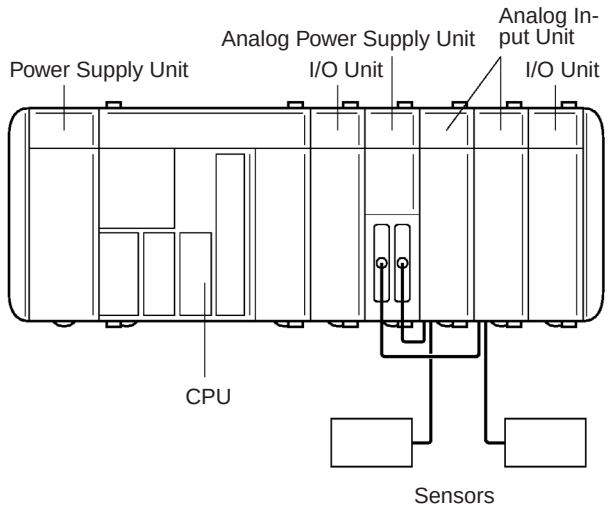

- The Analog Input Unit and Analog Power Supply Unit are mounted to the CPU, just like I/O Units.
- The Analog Input Unit can be mounted either on the left or right of the Analog Power Supply Unit.
- Refer to *3-1 Settings* for the wiring of the Analog Input Unit and Analog Power Supply Unit.

Note Power must be supplied to the Analog Input Unit from the Analog Power Supply Unit and CQM1H/CQM1, otherwise the Analog Input Unit will not operate.

1-3 Connecting Devices

1-3-1 CPU

The Analog Input Units can be mounted to the following CPUs.

Name	Model
CQM1H-series CPU	CQM1H-CPU11
	CQM1H-CPU21
	CQM1H-CPU51
	CQM1H-CPU61
CQM1-series CPU	CQM1-CPU11-E
	CQM1-CPU21-E
	CQM1-CPU41-EV1
	CQM1-CPU42-EV1
	CQM1-CPU43-EV1
	CQM1-CPU44-EV1

1-3-2 Analog Power Supply Units

Power can be supplied to the Analog Input Unit from the following Analog Power Supply Units.

Model	Remarks
CQM1-IPS01	Connects to a single Analog Input Unit.
CQM1-IPS02	Connects to a maximum of two Analog input Units.

1-4 System Construction

The Analog Input Unit occupies many words and consumes a large current. Therefore when constructing systems incorporating Analog Input Units, the user should take the following into consideration.

1-4-1 Total Number of I/O Words

The maximum number of available I/O words for each system varies with the CPU Unit. Refer to the following table.

Model	Maximum number of I/O words
CQM1H-CPU11	16
CQM1H-CPU21	
CQM1H-CPU51	32
CQM1H-CPU61	
CQM1-CPU11-E CQM1-CPU12-E	8
CQM1-CPU41-EV1 CQM1-CPU42-EV1 CQM1-CPU43-EV1 CQM1-CPU44-EV1	16

The Analog Input Unit usually occupies four input words. On the other hand, the Analog Power Supply Unit does not use any I/O words. The total number of words for each system must not exceed the above maximum number of I/O words.

If the Analog Input Unit has one or two analog inputs, turn OFF pin 9 of the Analog Input Unit's DIP switch so that the Analog Input Unit will occupy only two words.

1-4-2 Total Current Consumption

The following is the capacity of each available Power Supply Unit, from which power is supplied to a whole system.

Model	Capacity
CQM1-PA203	5 VDC, 3.6 A, 18 W
CQM1-PA206, CQM1-PA216	5 VDC, 6.0 A 24 VDC output, 0.5 A Total: 30 W
CQM1-PD026	5 VDC, 6 A, 30 W

The following table lists the current consumptions of the Analog Input Unit and Analog Power Supply Units. Refer to the *CQM1H Operation Manual (W363) or the CQM1 Operation Manual (W226)* and select the most suitable Power Supply Unit for your CQM1H/CQM1.

Unit	Unit	Current consumption at 5 VDC
Analog Input Unit	CQM1-AD041	80 mA
Analog Power Supply Unit	CQM1-IPS01	420 mA
	CQM1-IPS02	950 mA

⚠ **Caution** The total current consumption of each system must not exceed the capacity of the Power Supply Unit to be used.

SECTION 2
Nomenclature and Functions

This section provides the nomenclature and functions of the Analog Input Unit and Analog Power Supply Units.

2-1 Nomenclature 86
2-1-1 Analog Input Unit 86
2-1-2 Analog Power Supply Unit 88
2-2 Functions 89
2-2-1 Analog Input Unit 89

2-1 Nomenclature

2-1-1 Analog Input Unit

CQM1-AD041

Front View

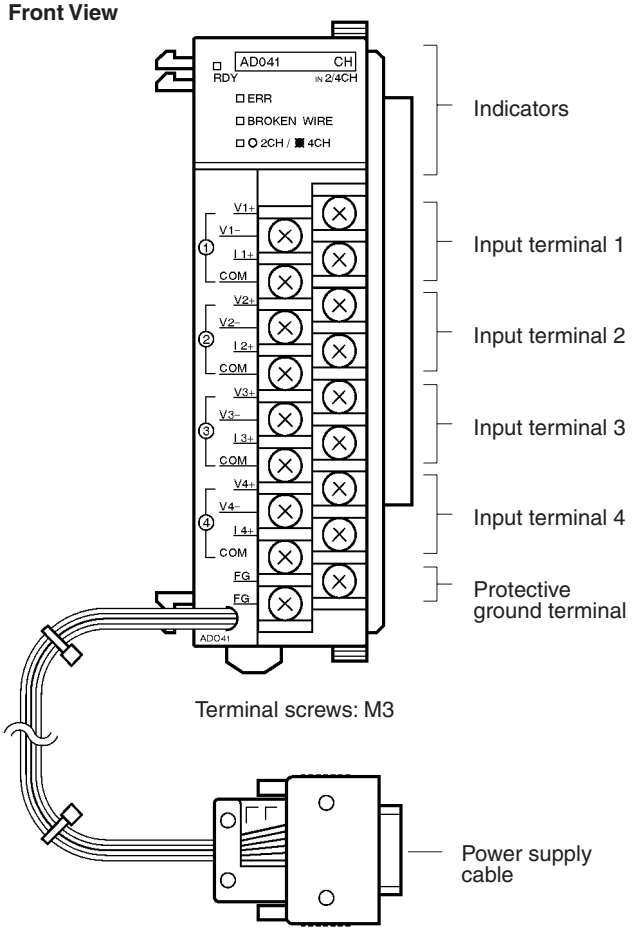

Left View

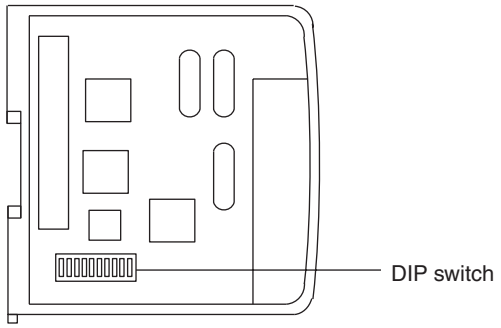

Indicators

Name	Color	Function
RDY	Green	Lit while the CQM1H/CQM1 is turned on and the Analog Input Unit is operating normally.
ERR	Red	Lit when pins 1 to 8 of the DIP switch on the left side of the Analog Input Unit are all set to OFF (i.e., when the conversion of all inputs is prohibited).
BROKEN WIRE	Red	Lit when an broken input wire is detected in an input range of 4 to 20 mA at 1 to 5 V.
2CH/4CH	Orange	Lit when there are four words occupied. Not lit when there are two words occupied.

Terminals

Terminal	Usage
Input terminal 1	Connect analog input for input 1.
Input terminal 2	Connect analog input for input 2.
Input terminal 3	Connect analog input for input 3.
Input terminal 4	Connect analog input for input 4.
Protective ground terminal	Connect the shielded wire of the analog input cable.

DIP Switch Function

The DIP switch is used to decide the operating method of the Analog Input Unit.

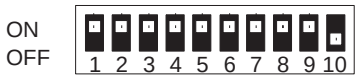

Factory setting

The following tables provides DIP switch settings for Analog Input Unit operation.

Input Range Settings (Pins 1 to 8)

Input range settings can be made for all inputs.

Input setting				Input range
Input 1	**Input 2**	**Input 2**	**Input 4**	
Pin 1: ON Pin 2: ON	Pin 3: ON Pin 4: ON	Pin 5: ON Pin 6: ON	Pin 7: ON Pin 8: ON	–10 to 10 V
Pin 1: OFF Pin 2: ON	Pin 3: OFF Pin 4: ON	Pin 5: OFF Pin 6: ON	Pin 7: OFF Pin 8: ON	0 to 10 V
Pin 1: ON Pin 2: OFF	Pin 3: ON Pin 4: OFF	Pin 5: ON Pin 6: OFF	Pin 7: ON Pin 8: OFF	4 to 20 mA at 1 to 5 V
Pin 1: OFF Pin 2: OFF	Pin 3: OFF Pin 4: OFF	Pin 5: OFF Pin 6: OFF	Pin 7: OFF Pin 8: OFF	Conversion is prohibited

Word Settings (Pin 9)

The Analog Input Unit will occupy four words (64 points) when pin 9 is set to ON. The Analog Input Unit will occupy two words (32 points) when pin 9 is set to OFF.

Average Processing Function (Pin 10)

Set pin 10 to ON to use the average processing function of the Analog Input Unit. Set pin 10 to OFF if the average processing function is not used.

Caution

All pins must be set before mounting the Analog Input Unit to the CQM1H/CQM1.

An error will result if pins 1 to 8 are all set to OFF (i.e., if all input conversion is prohibited).

When pin 9 is set to OFF so that the Analog Input Unit will occupy two words, be sure to set pins 5 to 8 to OFF.

Do not touch any internal components other than the DIP switch.

The time required for the Analog Input Unit to convert data will not be shortened even if some inputs are prohibited or if pin 9 is set to OFF so that the Analog Input Unit will occupy two words.

2-1-2 Analog Power Supply Unit

CQM1-IPS01

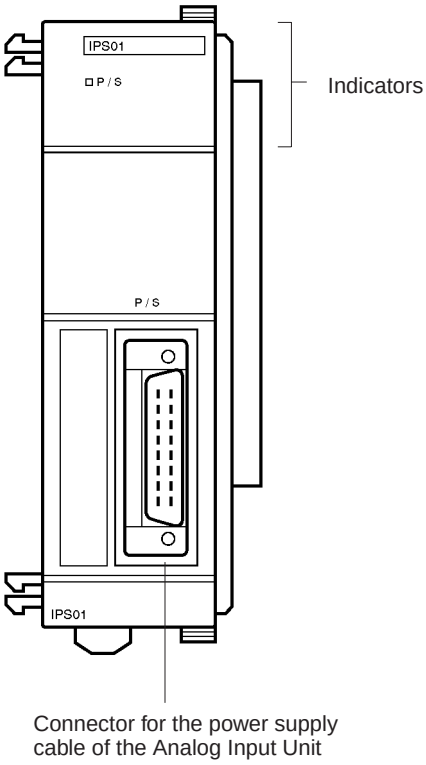

CQM1-IPS02

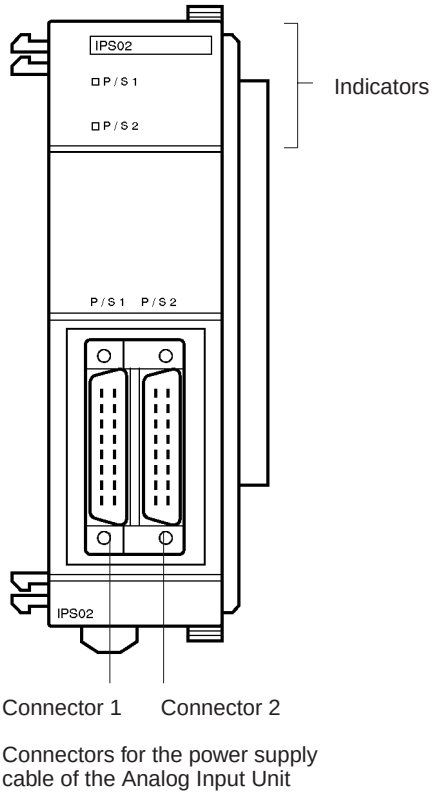

Indicators

Name	Color	Function
P/S (incorporated by the CQM1-IPS01 only)	Green	Lit when power is supplied to the Analog Input Unit via the CQM1-IPS01.
P/S1 (incorporated by the CQM1-IPS02 only)	Green	Lit when power is supplied to the Analog Input Unit via Connector 1 of the CQM1-IPS02.
P/S2 (incorporated by the CQM1-IPS02 only)	Green	Lit when power is supplied to the Analog Input Unit via Connector 2 of the CQM1-IPS02.

Note The P/S, P/S1, and P/S2 indicators are not lit when the power supply cable is disconnected.

Cable Connections

- Connect the power supply cable of the Analog Input Unit to the power supply connector of the Analog Power Supply Unit and secure the power supply cable connector with screws.
- The CQM1-IPS02 incorporates two power supply connectors. The power supply cable of the Analog Input Unit can be connected to either one of the power supply connectors.

⚠ **Caution** Be sure to turn off the Analog Power Supply Unit before connecting or disconnecting the power supply cable of the Analog Input Unit. After connecting the power supply cable, secure the power supply cable with the lock screws.

2-2 Functions

2-2-1 Analog Input Unit

Input Range and Conversion Data

The Analog Input Unit converts analog data into digital data according to the range set as shown in the following graphs.

–10 to 10 V

If the Analog Input Unit is set to a range of –10 to 10 V with the DIP switch, data between addresses F830 to 07D0 (hexadecimal) will be converted.

Addresses F830 to 07D0 (hexadecimal) are –2000 to 2000 in decimal.

If negative voltage is input to the Analog Input Unit, 2's complement with the MSB as the mark will be converted.

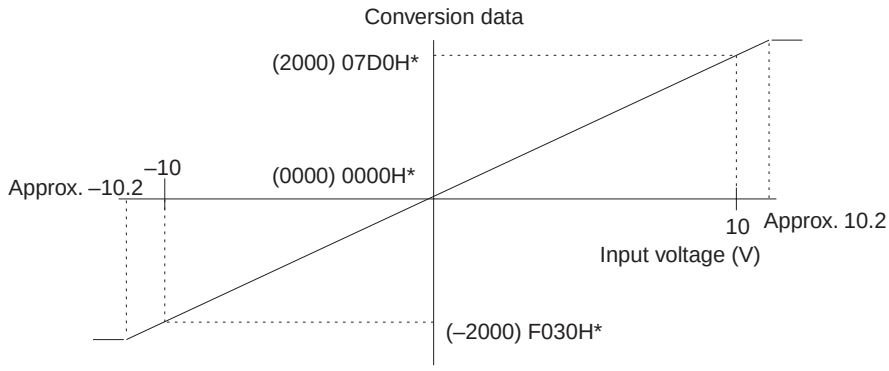

* "H" indicates hexadecimal.

The conversion range is F800 to 07FF (–2048 to 2047 in decimal).

0 to 10 V

If the Analog Input Unit is set to a range of 0 to 10 V with the DIP switch, data between addresses 0030 and 0FD0 (hexadecimal) will be converted.

Addresses 0030 to 0FD0 (hexadecimal) are 48 to 4048 in decimal.

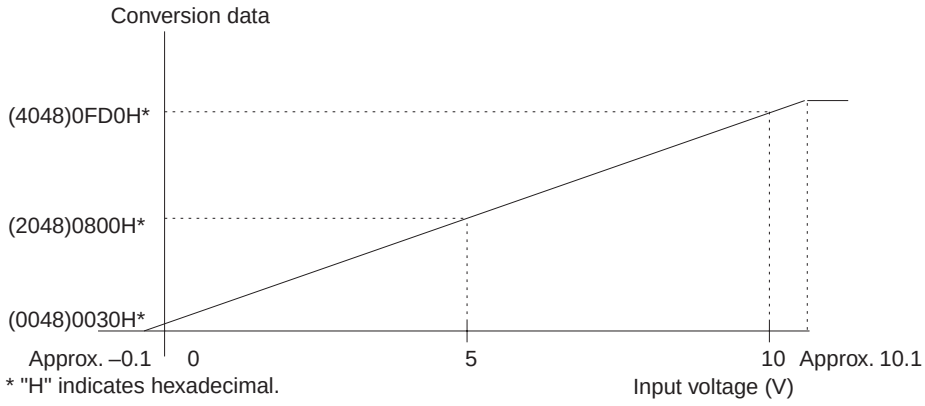

* "H" indicates hexadecimal.

The conversion range is 0000 to 0FFF (0000 to 4095 in decimal).

1 to 5 V or 4 to 20 mA

If the Analog Input Unit is set to a range of 1 to 5 V or 4 to 20 mA, data between addresses 0030 and 0FD0 in hexadecimal or 48 to 4048 in decimal will be converted.

The conversion range of the Analog Input Unit is between addresses 0000 and 0FFF in hexadecimal or 0 to 4095 in decimal.

If input data is below the converted range (i.e., the input voltage of the data is less than approximately 0.95 V or the input current of the data is less than approximately 3.8 mA), the broken wire detection function of the Analog Input Unit will be activated.

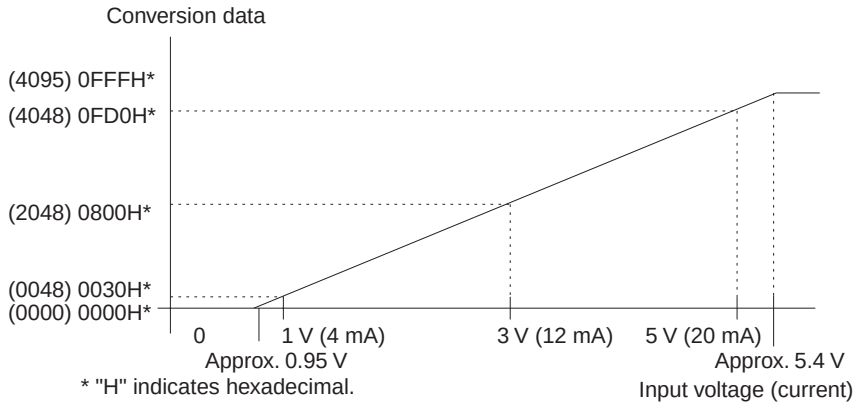

⚠ Caution The Analog Input Unit converts inputs 1, 2, 3, 4, 1, etc., in this order. If the input range is 1 to 5 V or 4 to 20 mA, the Analog Input Unit may be influenced by the previous input if the input has changed greatly. Avoid setting a range of –10 to 10 V as much as possible before using an input range of 1 to 5 V or 4 to 20 mA.

Mean Value Processing Function

The mean value processing function of the Analog Input Unit is activated by setting pin 10 of the Analog Input Unit's DIP switch to ON. If the mean value processing function is activated, all input values (inputs 1 to 4) will be averaged.

The mean value processing function enables the Analog Input Unit to convert each input value eight times, average the values, and store the results as digital conversion data in the input word. The contents of the word are refreshed with intervals of approximately 72 ms.

Note By using the AVG instruction of the CPU, only particular input values can be averaged or the number of averaging operations can be changed.

Broken Wire Detecting Function

- The broken wire detecting function of the Analog Input Unit makes it possible to detect and alarm the disconnection of any wire that has been connected to the Analog Input Unit.
- The broken wire detecting function of the Analog Input Unit will work when the input voltage and current drops to approximately 0.95 V and 3.8 mA or lower if the Analog Input Unit is set to a range of 1 to 5 V or 4 to 20 mA.
- When the Analog Input Unit detects wire disconnection, the broken wire detecting indicator (BROKEN WIRE) will be lit and the broken wire flag of the input that has been disconnected will be set to 1. (Refer to *3-3-2 Adjustment*)
- The broken wire detecting indicator will reset to OFF automatically when the input returns to normal.

SECTION 3
Operation

This section provides the operational procedures for the Analog Input Unit and Analog Power Supply Units.

3-1 Settings 92
3-1-1 Wiring 92
3-1-2 Wiring Precautions 92
3-2 Bit Number Allocation 94
3-2-1 Word Allocation 94
3-2-2 Bit Allocation 95
3-3 Programming and Adjustment 96
3-3-1 Programming 96
3-3-2 Adjustment 99

3-1 Settings

3-1-1 Wiring

- Connect a two-conductor twisted-pair shielded cable to the Analog Input Unit.
- The input terminals of the Analog Input Unit, to which the two-conductor twisted-pair shielded cable is connected, vary with the input range as shown in the following illustrations. In some environments, the shielded wire of the two-conductor twisted-pair cable should be connected to the COM terminal instead of the FG terminal of the Analog Input Unit so that the Analog Input Unit will not be influenced by external noise.
- The COM terminal is internally connected to the analog 0-V terminal of the Analog Input Unit.

Voltage Input

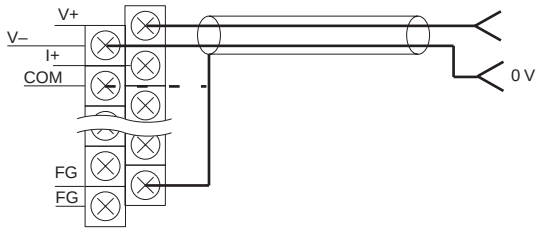

Current Input

Short-circuit the V+ and I+ terminals for current input.

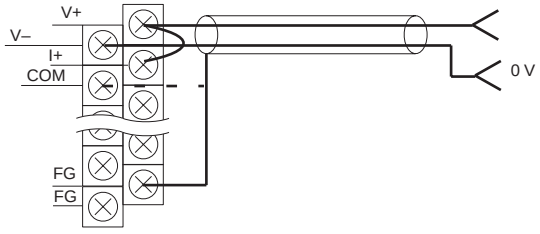

3-1-2 Wiring Precautions

In order to prevent noise interference, note the following when wiring the Analog Input Unit:

- Do not install power lines or high-tension lines along in close proximity to the Analog Input Unit's input lines.
- When connecting an inductive load such as a relay, solenoid, or electromagnet valve to the Analog Input Unit, be sure to insert a surge absorption diode or surge absorber to the load circuit as shown in the following examples. The surge absorption diode or surge absorber must be as close as possible to the inductive load in the load circuit. The withstand voltage of the surge absorption diode must be at least five times as large as the circuit voltage.

DC Relay

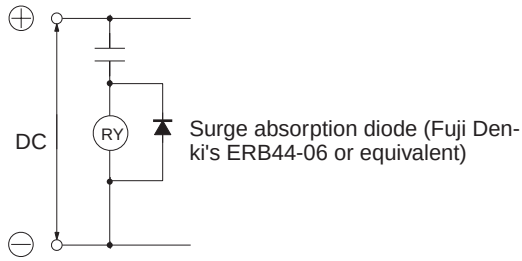

AC Relay

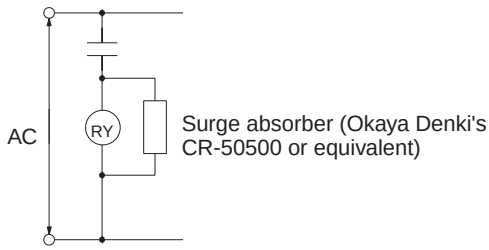

Solenoid

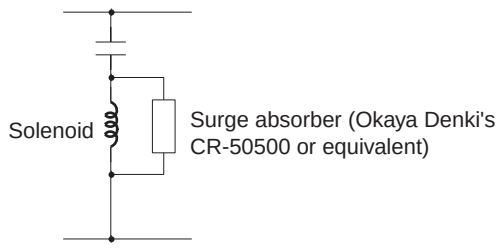

If the Analog Input Unit malfunctions due to external noise through the power line to the Analog Input Unit, insert a noise filter to the power line. The Analog Input Unit may be influenced by noise if the Analog Input Unit and an electric welding machine share a single power source or if the Analog Input Unit is operated near a machine that generates high-frequency electromagnetic waves.

Use a twisted-pair cable for the input wiring to the Analog Input Unit.

Following is the input circuit for the Analog Input Unit.

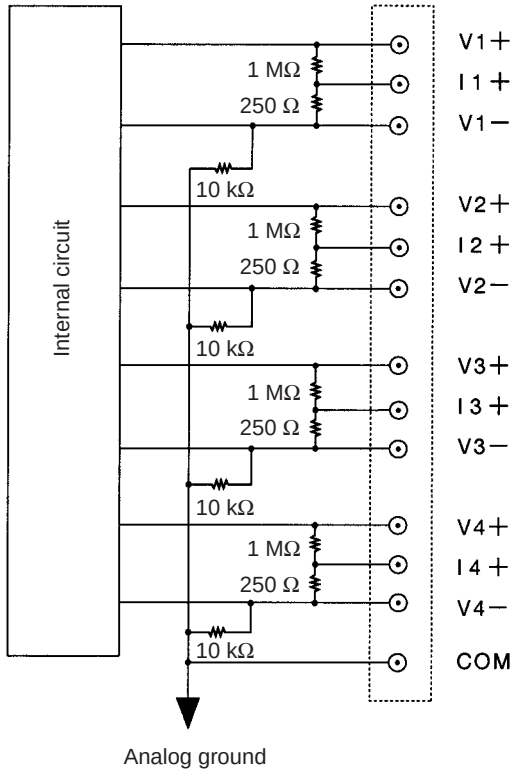

When the CQM1-IPS02 Analog Power Supply Unit is connected to the CQM1-AD021 Analog Input Unit and CQM1-DA021 Analog Output Unit, each analog ground is connected.

3-2 Bit Number Allocation

Two input words or four input words can be allocated to the Analog Input Unit, which are specified with the DIP switch of the Analog Input Unit. Refer to *page 87, DIP Switch Function* for details.

3-2-1 Word Allocation

Input words are allocated according to the mounting order (from left to right) of the Units. Refer to the *CQM1H Programming Manual (W364), 3-2-3 I/O Allocation or the CQM1 Programming Manual (W228), 3-1 CQM1 Memory Area Functions* for details on I/O word allocation.

No word is allocated to the Analog Power Supply Unit. Mount the Analog Power Supply Unit next to the Analog Input Unit either to the left or right.

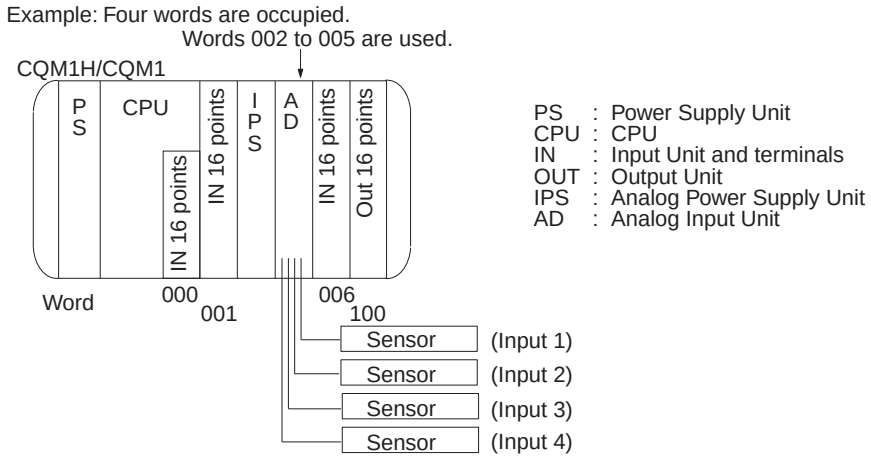

3-2-2 Bit Allocation

The following shows how the words allocated to the Analog Input Unit are used. Any conversion data is stored in hexadecimal.

Bit / Word	15	14	13	12	11	10	09	08	07	06	05	04	03	02	01	00
n	Input 1 conversion data															
n + 1	Input 2 conversion data															
n + 2	Input 3 conversion data															
n + 3	Input 4 conversion data															

Error Flag (Bit 13 of the First Word)

Bit 13 of the first word functions as an error flag. The error flag turns ON (becomes 1) if an invalid setting is made with the DIP switch (e.g., prohibiting the conversion of all words) and the Analog Input Unit does not operate. If the input range of input 1 is –10 to 10 V and the conversion data of input 1 is negative, however, this bit turns ON because 2's complement is used to indicate the negative data. If bit 15 of the first word is OFF and bit 13 is ON, it indicates an error.

Broken Wire Detection Flag (Bit 12 of Each Word)

If the input range of the Analog Input Unit is 1 to 5 V or 4 to 20 mA and the voltage of an input is less than approximately 0.95 V or the current of an input is less than approximately 3.8 mA, the broken wire detecting function of the Analog Input Unit will be activated and the bit 12 of the corresponding word will turn ON (the bit will become 1).

3-3 Programming and Adjustment

3-3-1 Programming

This section provides program examples for the Analog Input Unit using four words in the following input ranges. The program examples are not valid for the Analog Input Unit with its mean value processing function activated.

Input	Input range	Word storing conversion data
Input 1	0 to 10 V	Wd 002
Input 2	4 to 20 mA	Wd 003
Input 3	1 to 5 V	Wd 004
Input 4	–10 to 10 V	Wd 005

Refer to the *SYSMAC CQM1H/CQM1 Programming Manual* for details on the instructions that are used.

Power ON

It takes approximately 10 ms for the Analog Input Unit to store the first conversion data after the Analog Input Unit is turned on if the mean value processing function of the Analog Input Unit is not activated. It takes approximately 72 ms for the Analog Input Unit to store the first conversion data after the Analog Input Unit is turned on if the mean value processing function is activated. If the user wants to operate the Analog Input Unit immediately after turning the Analog Input Unit on, construct the following program so that the Analog Input Unit will wait until the conversion data becomes effective.

When the power is ON, Timer 5 starts operating. The Up Flag of Timer 5 turns ON 100 ms later and the conversion data of input 1, which is stored in word 002, will be transferred to DM 0000.

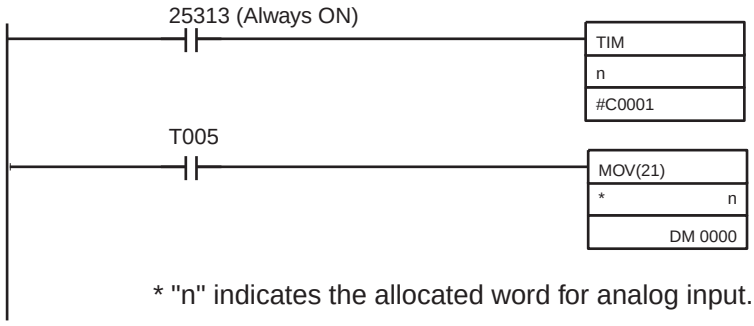

* "n" indicates the allocated word for analog input.

Scaling

The conversion of input voltage or current in a certain range to a value in a certain range is called scaling. For example, if the user converts input voltage or current so to be displayed as a percentage, the converted value will be displayed in the range 0 through 100.

Use the CPU instructions SCL and SCL2 for scaling.

Note The SCL2 instruction cannot be used on the CQM1-CPU11-E or CQM1-CPU21-E.

An example for the conversion of negative data in an input range of –10 to 10 V into a positive value is provided.

SCL

The following is an example of SCL instruction use.

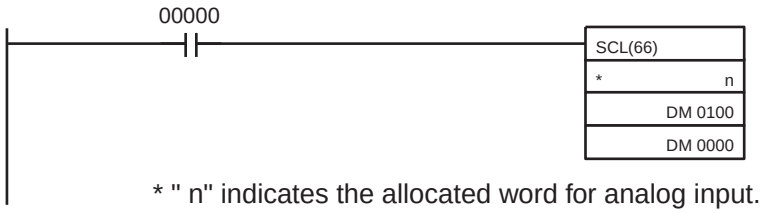

* " n" indicates the allocated word for analog input.

Set value

DM 0100	0000	(BCD)
DM 0101	0030	(Hexadecimal)
DM 0102	0100	(BCD)
DM 0103	0FD0	(Hexadecimal)

When input 00000 turns ON, the conversion data of Word 002 is scaled according to the parameters set in DM 0100 and DM 0102 and the result is stored in DM 0000.

Scaling is executed so that 0030 to 0FD0 (hexadecimal) will correspond to 0000 to 0100 (BCD).

SCL2

The following is an example of SCL2 instruction use.

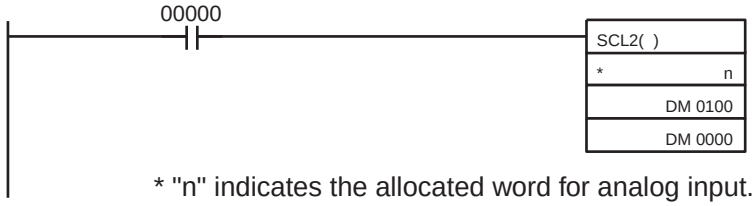

* "n" indicates the allocated word for analog input.

Set value

DM 0100	0030	(Hexadecimal)
DM 0101	0028	(Hexadecimal)
DM 0102	0001	(BCD)

When input 00000 turns ON, the conversion data of Word 002 is scaled according to the parameters set in DM 0100 to DM 0102 and the result is stored in DM 0000.

Scaling is executed by subtracting 30 (hexadecimal) from the conversion data and multiplying the result by 1/40 (0001 (BCD)/0028 (hexadecimal)) so that 0030 to 0FD0 (hexadecimal) will correspond to 0 to 100 (BCD).

Program Example for Scaling Conversion Data in an Input Range of –10 to 10 V into a Positive Value

The SCL2 instruction processes negative values expressed by 2's complement. On the other hand, the SCL instruction cannot process negative values. The following is an example of the scaling of negative conversion data in an input range of –10 to 10 V into a positive value so that the positive value can be processed by the SCL instruction.

When input 00000 turns ON, the rightmost 12 bits of the conversion data in Word 005 is obtained by the ANDW instruction and stored in DM 0200 as seen in the following program.

The XORW instruction is used to reverse Bit 12 of the stored value so that the range of the value will be shifted.

Scaling is executed so that F830 to 07D0 (hexadecimal) will correspond to 0030 to 0FD0 (hexadecimal).

Use the SCL and SCL2 instructions to convert the range further.

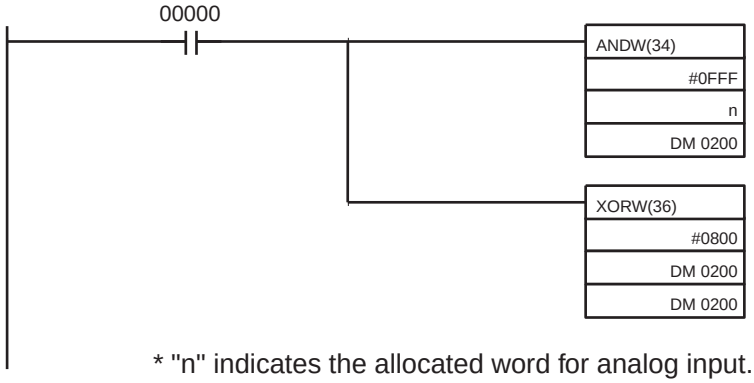

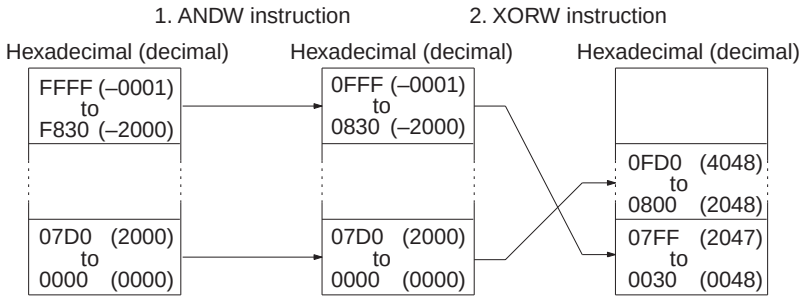

Mean Value Processing

Mean value processing is used to convert unstable input or shut out noise interference. Either the mean value processing function of the Analog Input Unit or the AVG instruction can be used.

In this section, mean value processing using the AVG instruction is explained. Refer to *2-2 Functions* for details on the mean value processing function of the Analog Input Unit.

The AVG instruction makes it possible to average conversion data the number of times specified by the user per scan.

⚠ **Caution** The AVG instruction cannot handle 2's complement. If the conversion data is 2's complement (i.e., the Analog Input Unit is set to a range of –10 to 10 V), use the AVG instruction with the following program.

When input 00000 turns ON, any conversion data (F830 to 07D0) in a range of –10 to 10 V is converted into a positive value (0030 to 0FD0) by the ANDW and XORW instructions. Then the mean value of the converted data is obtained by the AVG instruction. Ten data values in BCD are stored in DM 0300 to obtain the mean value of the converted data. The mean value is stored in DM 0000.

While input 00000 is ON, the mean value of the latest 10 data values is always stored in DM 0000.

When the AVG instruction is used, the number of words equal to the number of data values to obtain the mean value plus two words must be secured next

to the word that stores the result. DM 0000 to DM 0011 are secured in the example program.

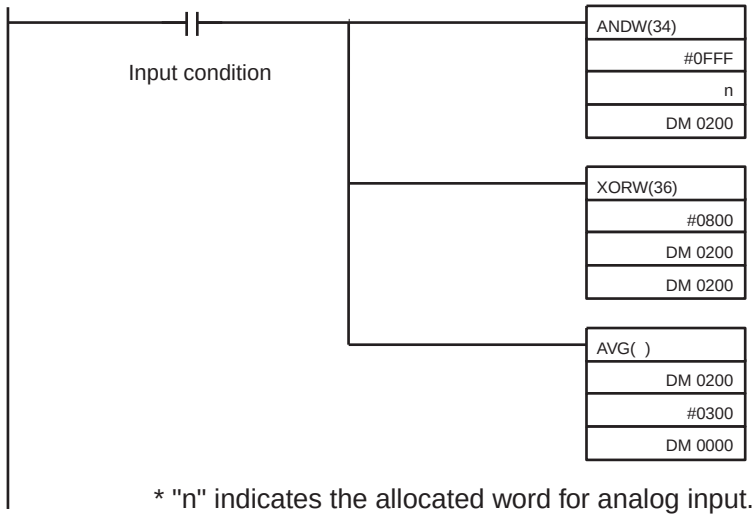

* "n" indicates the allocated word for analog input.

3-3-2 Adjustment

The accuracy of the Analog Input Unit is ±1% without adjustment. If this is adequate, the user need not adjust the Analog Input Unit. Fine tuning of the Analog Input Unit is explained in this section.

The Analog Input Unit is adjusted with parameters set with the SCL instruction.

0 to 10 V, 1 to 5 V, or 4 to 20 mA

If the Analog Input Unit is set to a range of 0 to 10 V, 1 to 5 V or 4 to 20 mA, follow the steps described below to adjust the Analog Input Unit.

1,2,3...

1. Refer to *3-1 Settings* and connect the Analog Input Unit, CPU, and sensor or transducer.
2. Connect a peripheral device such as a Programming Console to the CPU (in any mode) and monitor the allocated word of the analog input to be adjusted.

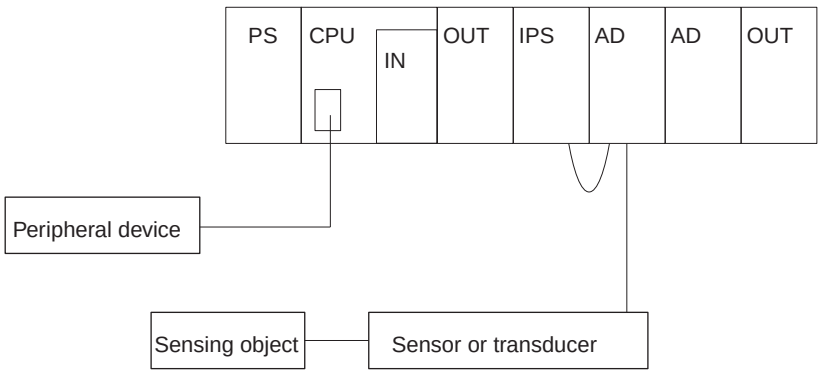

3. Obtain the minimum value of the sensing object. For a sensing operation, for example, set the sensing object so that the output value of the sensor or transducer will be minimum. For temperature measurement, it may be difficult to obtain the minimum value. In that case, instead of using the sensor or transducer, use a reference power supply to obtain the output at the lowest temperature.

4. Use the peripheral device to monitor the word to which the analog input data to be adjusted is stored. The CQM1H/CQM1 can be in any mode. The analog input conversion data will be the lower-limit value.
5. Apply the same method to the analog input's maximum value to obtain the upper-limit value.
6. Create the following program to scale values in a range between the lower and upper-limit values and designate the lower- and upper-limit values that have been monitored as parameters. Refer to *page 96, Scaling* for details.

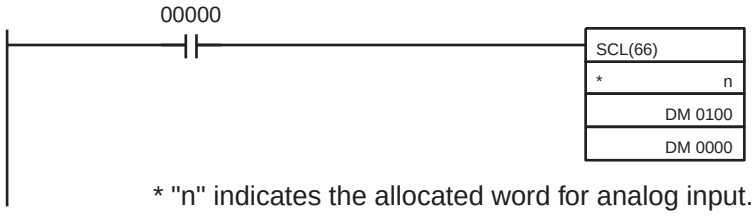

Set value

DM 0100	0000	(BCD)
DM 0101		(Hexadecimal)
DM 0102	0100	Lower limit value
DM 0103		(BCD)
		(Hexadecimal)
		Upper limit value

–10 to 10 V

If the Analog Input Unit is set to a range of –10 to 10 V, follow the steps described below to adjust the Analog Input Unit.

1,2,3...

1. Refer to *3-1 Settings* and connect the Analog Input Unit, CPU, and sensor or transducer.
2. Connect a peripheral device such as a Programming Console to the CPU and while referring to *3-3-1 Programming,* create a program to convert 2's complement.

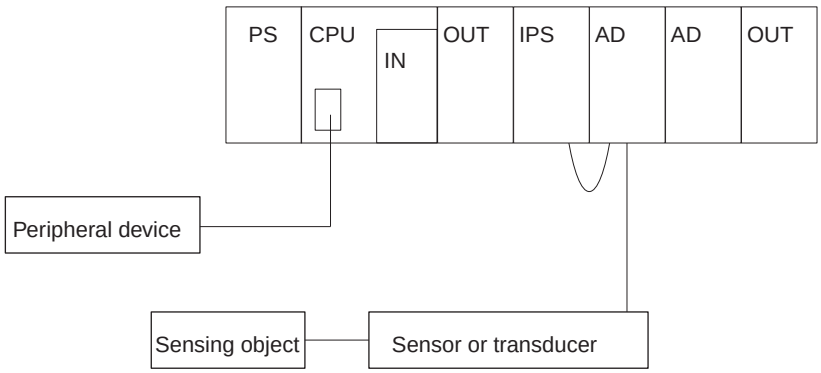

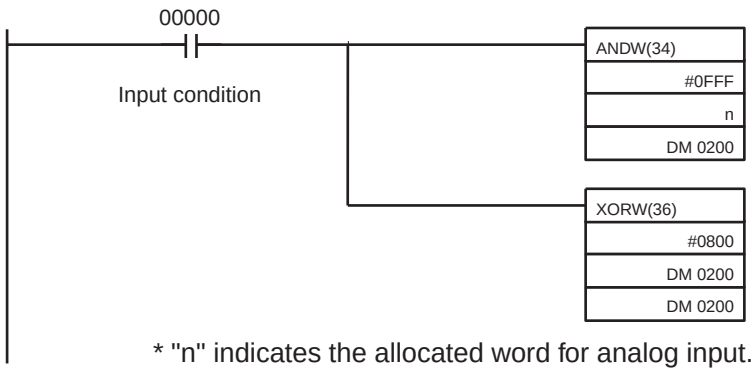

3. Obtain the minimum value of the sensing object. For a sensing operation, for example, set the sensing object so that the output value of the sensor or transducer will be minimum. For temperature measurement, it may be difficult to obtain the minimum value. In that case, instead of using the sensor or transducer, use a reference power supply to obtain the output at the lowest temperature.
4. Put the CQM1H/CQM1 into operation mode or monitor mode and use the peripheral device to monitor the word (DM0200) in which the scaled conversion data is stored. The conversion data will be the lower-limit value.
5. Apply the same method to the analog input maximum value to obtain the upper-limit value.
6. Create the following program to scale values in a range between the lower- and upper-limit values and designate the lower and upper limit values that has been monitored as parameters. Refer to *page 96, Scaling* for details.

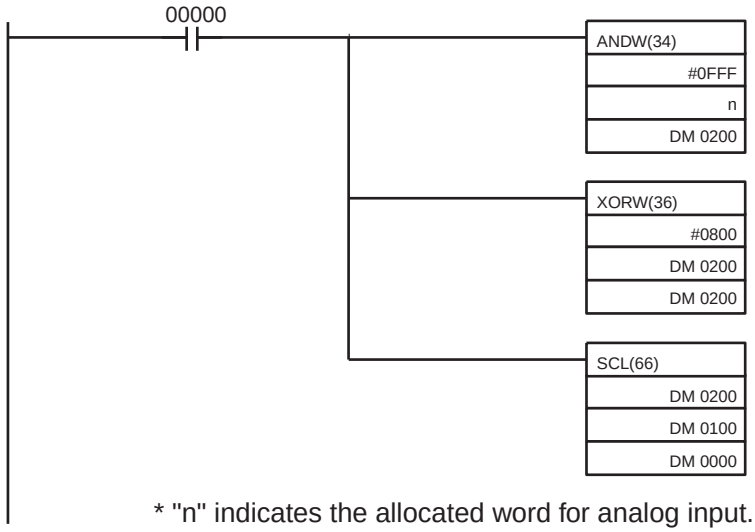

* "n" indicates the allocated word for analog input.

	Set value	
DM 0100	0000	Insert the conversion value corresponding to the minimum value.
DM 0101		Insert the monitor value "lower limit value."
DM 0102	0100	Insert the conversion value corresponding to the maximum value.
DM 0103		Insert the monitor value "upper limit value."

Appendix A
Specifications

Standard Specifications

The standard specifications of the Analog Input Unit and Analog Power Supply Units conform to those of the CQM1H/CQM1 PC.

Performance Specifications

CQM1-AD041 Analog Input Unit

Item	Specification	
Input signal range	Voltage input	–10 to 10 V
		0 to 10 V
		1 to 5 V
	Current input	4 to 20 mA
External input impedance	Voltage input	1 MΩ max.
	Current input	250 Ω
Resolution	1/4000	
Accuracy	±0.5% (25°C) ±1.0% (0° to 55°C)	
Conversion speed	2.5 ms/point (see note 1)	
Maximum input signal	Voltage input	±15 V max.
	Current input	±30 mA max.
Insulation method	Input terminals and PC signals are insulated with photocoupler (see note 2)	
Current consumption	80 mA at 5 VDC excluding the current supplied from the Analog Power Supply Unit.	
Weight	210 g	
Dimensions	32 x 110 x 107 (W x H x D) mm	

Note 1. Conversion data is refreshed every 10 ms (2.5 ms x 4).
2. Analog input terminals are not insulated from one another.

Time Lag Required for Data Conversion

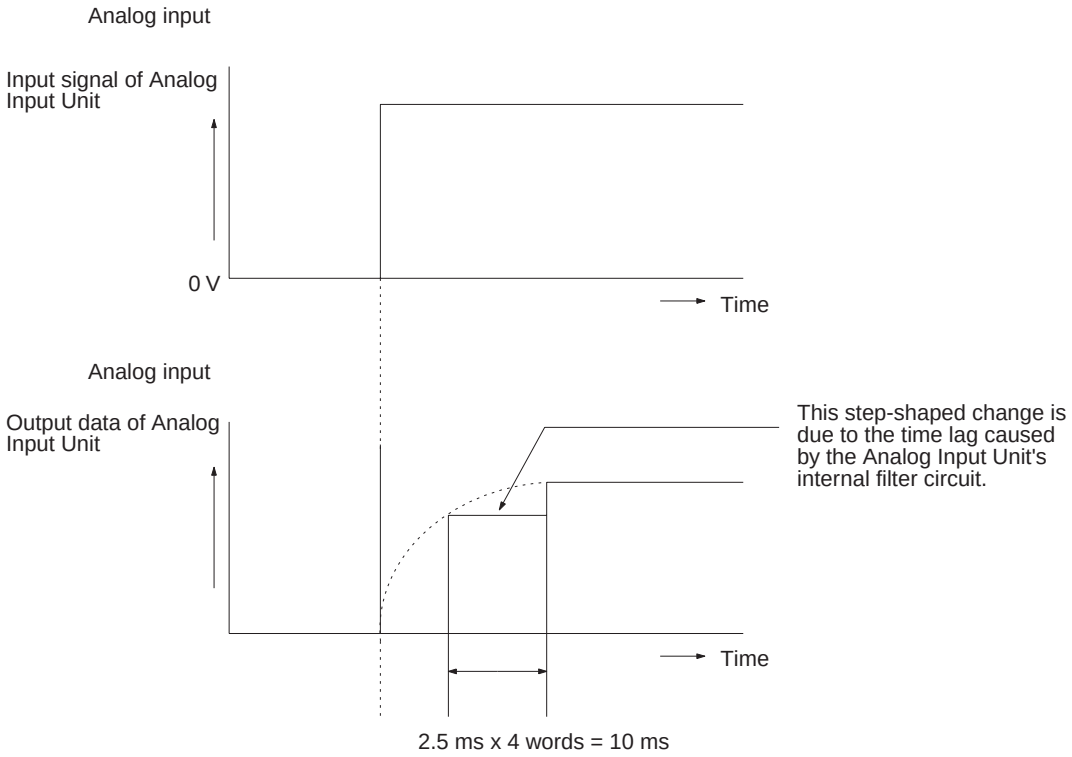

CQM1-IPS01 Analog Power Supply Unit

No. of connectable Units	CQM1-AD041 x 1
Current consumption	420 mA at 5 VDC
Weight	145 g
Dimensions	32 x 110 x 107 (W x H x D) mm

CQM1-IPS02 Analog Power Supply Unit

No. of connectable Units	CQM1-AD041 x 2
Current consumption	950 mA at 5 VDC
Weight	180 g
Dimensions	32 x 110 x 107 (W x H x D) mm

Dimensions

Analog Input Unit

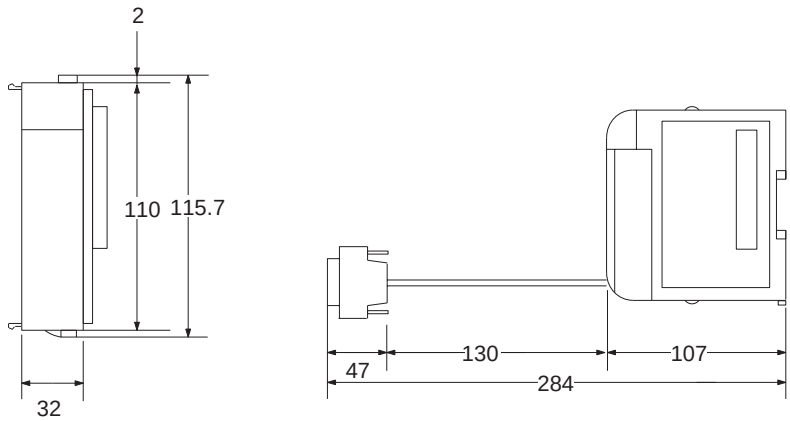

Analog Power Supply Unit

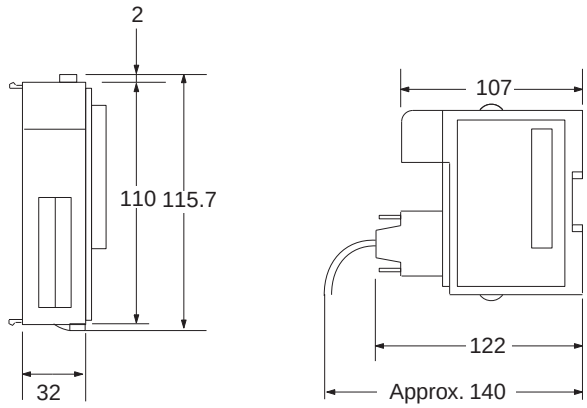

Appendix B
Troubleshooting

Analog Input Unit

Kind of error	Phenomenon	Cause	Remedy
Indicator	The RDY indicator is not lit.	1. The Unit is not connected properly. 2. No end cover is attached.	Refer to the *CQM1H/CQM1 Operation Manual* and reset the Analog Input Unit.
	The ERR indicator is lit.	The DIP switch is set to prohibit the conversion of all inputs.	Refer to *2-1 Nomenclature* and set the DIP switch properly.
	The BROKEN WIRE indicator is lit.	An input set to a range of 1 to 5 V or 4 to 20 mA is disconnected.	Check the wiring, terminal board, input voltage, and input current.
		Unused analog input is set to a range of 1 to 5 V or 4 to 20 mA.	Set the unused analog input to any other range or set to prohibit conversion.
No. of words	The Analog Input Unit can be allocated to two words only or allocated to four words.	The DIP switch setting is incorrect.	The DIP switch setting can be monitored with the 2 CH and 4 CH indicators. Check whether the setting is proper. If not, set the DIP switch properly.
Conversion data	The conversion data of the Analog Input Unit does not change even if the input voltage or current is changed.	The power cable is not connected to the Analog Power Supply Unit.	Connect the power cable.
		The voltage or current input is not within the range that has been set.	Check the input voltage or current or the range that has been set.
	The conversion data of the Analog Input Unit changes slowly when the input voltage or current is changed.	The mean value processing function is working.	Set the mean value processing switch properly.
I/O Unit over	The CPU has an I/O Unit over error.	The total number words used by the Units connected exceed the maximum available words of the CPU.	Each Analog Input Unit uses four or two words. Check if the total number of words are exceeding the maximum available words of the CPU.

Analog Power Supply Unit

Kind of error	Phenomenon	Cause	Remedy
LED	The P/S (P/S1, P/S2) indicator is not lit.	The power supply cable of the Analog Input Unit is not connected to the Analog Power Supply Unit.	Connect the power supply cable to the Analog Power Supply Unit. Turning on the Analog Power Supply Unit will not cause the P/S (P/S1, P/S2) indicator to be lit if the power supply cable of the Analog Input Unit is not connected to the Analog Power Supply Unit.
		Power is not supplied to the system.	Supply power to the system.

PART V
Analog Output Unit and Analog Power Supply Units

CQM1-DA021

CQM1-IPS01

CQM1-IPS02

SECTION 1
Features and System Configuration

This section provides the features and system configuration relating to the Analog Output Unit and Analog Power Supply Units.

1-1 Features of Analog Output Unit 112
1-2 System Configuration 112
1-2-1 Analog Power Supply Units 113
1-2-2 CPU. 113

1-1 Features of Analog Output Unit

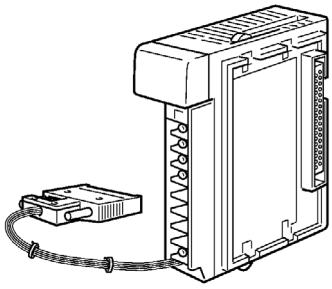

- The CQM1-DA021 is a SYSMAC CQM1H/CQM1-series Analog Output Unit that converts digital signals into analog signals.
- The Analog Output Unit has an output signal current range of 0 to 20 mA and an output signal voltage range of –10 to 10V.
- A single Analog Output Unit allows two-point digital-to-analog conversion.
- It takes only 0.5 ms for two-point digital-to-analog conversion.

1-2 System Configuration

The Analog Output Unit is mounted to the CQM1H/CQM1 CPU as shown in the following illustration.

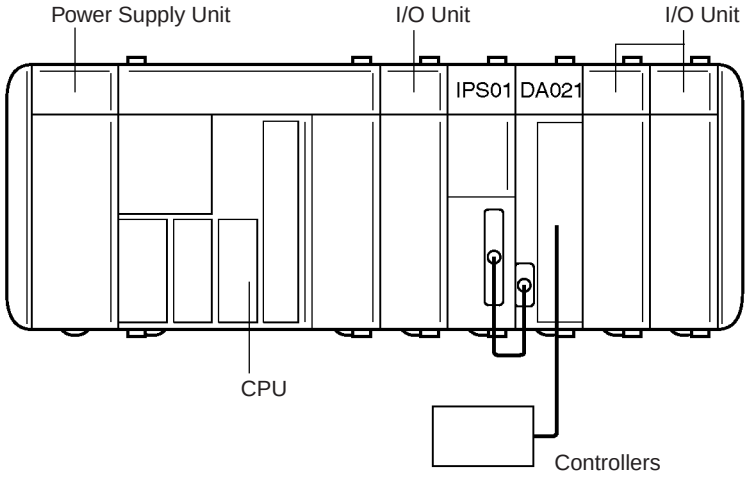

- The CQM1-IPS01 Analog Power Supply Unit connects to a single Analog Output Unit.
- A single Analog Input Unit and single Analog Output Unit can be connected to the CQM1-IPS02 Analog Power Supply Unit. Two Analog Output Units cannot be connected to the CQM1-IPS02 Analog Power Supply Unit.
- The Analog Output Unit and Analog Power Supply Unit are mounted to the CPU, just like I/O Units.
- The Analog Output Unit can be mounted either on the left or right of the Analog Power Supply Unit. The Analog Output Unit must be, however, adjacent to the Analog Power Supply Unit.
- Refer to *3-1 Settings* for the wiring of the Analog Output Unit and Analog Power Supply Unit.

Note Power must be supplied to the Analog Output Unit from the Analog Power Supply Unit and CQM1H/CQM1, otherwise the Analog Output Unit will not operate.

1-2-1 Analog Power Supply Units

The following table lists the current consumptions of the Analog Output Unit and Analog Power Supply Units. To select the Analog Power Supply Unit, refer to the *CQM1H Operation Manual (W363) or the CQM1 Operation Manual (W226)* for details.

Unit	Current consumption at 5 VDC (mA)
CQM1-DA021	90 mA
CQM1-IPS01	420 mA
CQM1-IPS02	950 mA

1-2-2 CPU

The Analog Output Unit occupies two I/O words. Make sure that the total I/O points will not exceed the I/O points of the CPU. The Power Supply Unit does not occupy any words.

SECTION 2
Nomenclature and Functions

This section provides the nomenclature and functions of the Analog Output Unit.

2-1 Nomenclature 116
2-1-1 Functions of Setting Pins 117
2-2 Functions 117
2-2-1 Output Characteristics 117

2-1 Nomenclature

Front View

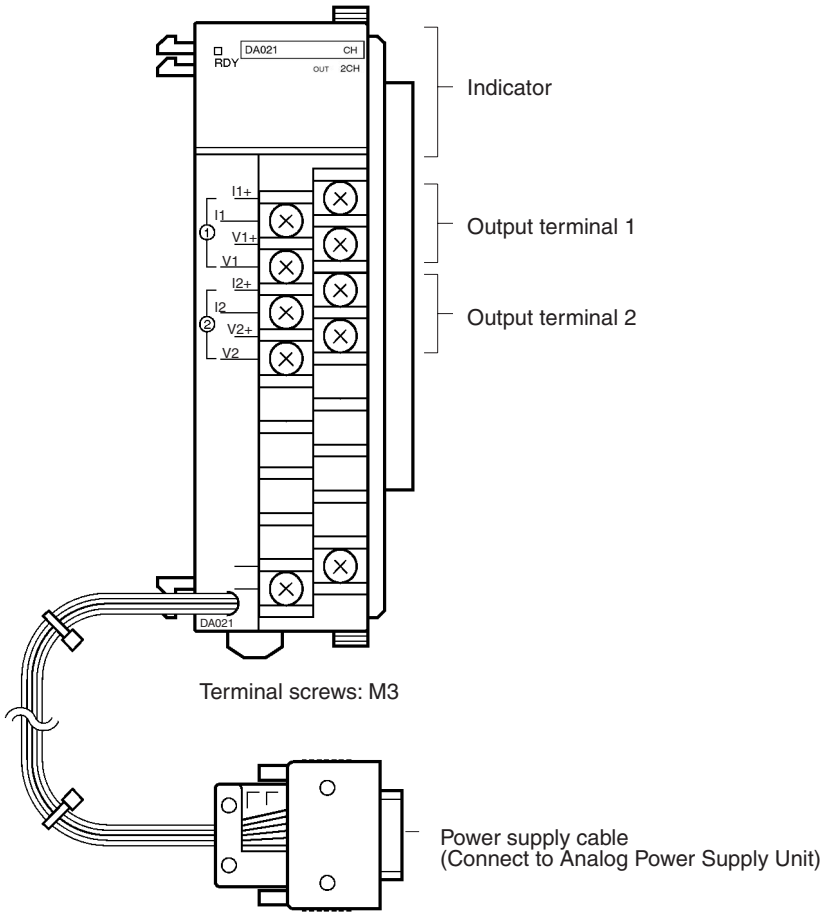

Left Side View

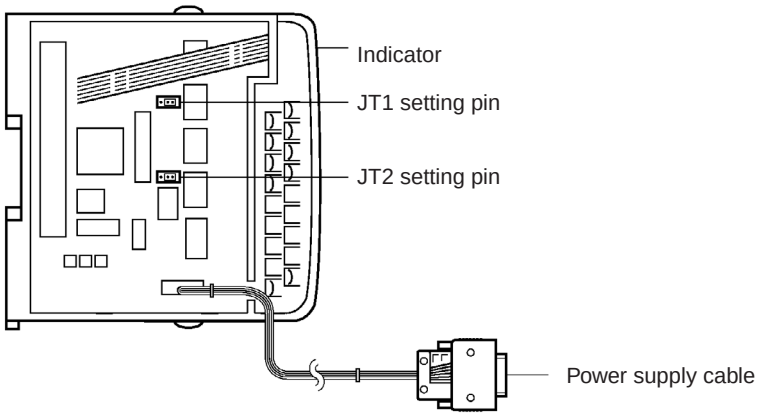

Indicator

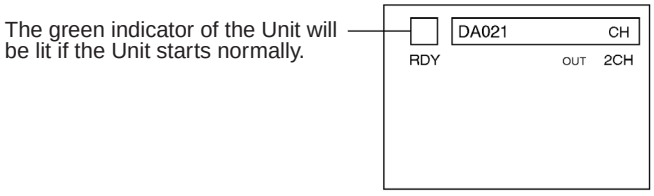

Terminals

Terminal	Usage
Output terminal 1	Connect analog output for output 1.
Output terminal 2	Connect analog output for output 2.

2-1-1 Functions of Setting Pins

The setting pins are used to prohibit negative voltage output.

Setting pin	Status	
	Left ○ ○ ○ Right 1 2 3	Left ○ ○ ○ Right 1 2 3
JT1	Word n: Normal setting (factory set)	Word n: Negative voltage output prohibited
JT2	Word n + 1: Normal setting (factory set)	Word n + 1: Negative voltage output prohibited

When negative voltage output is prohibited, 0 V is output from the voltage output terminal if the Analog Output Unit has negative voltage output data.

Note

1. At the time of program debugging with an external device connected to the Analog Output Unit, set the setting pins to prohibit negative voltage output so that the wrong output will not damage the external device. Do not use the Analog Output Unit to output negative voltage while the setting pins are set to prohibit negative voltage output.
2. If an input circuit incorporating a pull-up resistor is connected to the Analog Output Unit, set the setting pins to normal setting. If the setting pins are set to prohibit negative voltage output, the Analog Output Unit will be influenced by the synch current and no output will be ON properly.
3. Do not touch any internal components other than the setting pins.

2-2 Functions

2-2-1 Output Characteristics

The Analog Output Unit converts data from the CPU into voltage or current and outputs the data to the voltage terminal or current terminal.

Voltage Output

Data between 0000 and 07FF (hexadecimal) for output from the CPU are converted into a voltage of 0 to 10 V and output.

Negative voltage is converted to 2's complement with the MSB. Data between F800 to FFFF (hexadecimal) for output from the CPU is converted into a voltage of –10 to 0V and output. If negative voltage output is prohibited, 0 V will be output.

Bits 11 to 14 of output data have nothing to do with output voltage. For example, 0 V is output for 0000 and 7800 (hexadecimal).

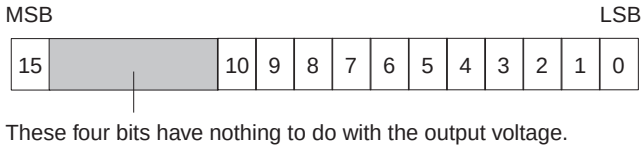

MSB: Most significant bit

LSB: Least significant bit

The following graph shows the voltage output characteristics of the Analog Output Unit.

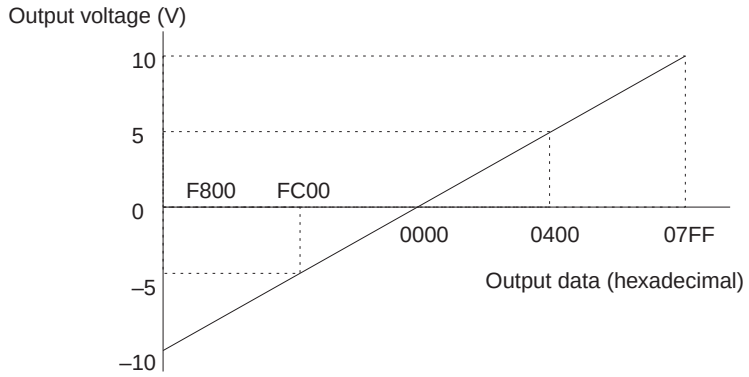

Note

1. If the setting pins are set to prohibit negative voltage output, no negative voltage will be output.
2. In 2's complement, –1 is FFFF, by subtracting 1 continuously, the smallest value will be F800.

Current Output

Data between 0000 to 07FF (hexadecimal) for output from the CPU is converted into a current of 0 to 20 mA and output.

Bits 11 to 14 of the output data have nothing to do with output current (i.e., 0 mA is output for 0000 and 7800 (hexadecimal)). Bit 15 must be always set to 0. If bit 15 is set to 1, the data conversion of the Analog Output Unit may take longer.

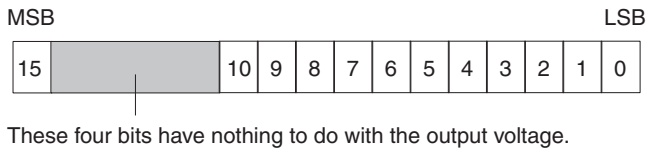

MSB: Most significant bit

LSB: Least significant bit

The following graph shows the current output characteristics of the Analog Output Unit.

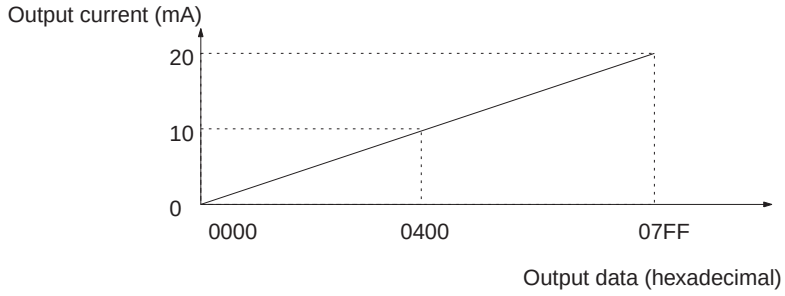

SECTION 3
Operation

This section provides the operational procedures for the Analog Output Unit.

3-1 Settings 120
3-1-1 Cable Connections 120
3-1-2 Wiring 120
3-1-3 Terminal Arrangement 122
3-2 Bit Number Allocation 122
3-2-1 Word Allocation 122
3-2-2 Bit Allocation 123
3-3 Programming and Adjustment 123
3-3-1 Programming 123
3-3-2 Precaution 126

3-1 Settings

3-1-1 Cable Connections

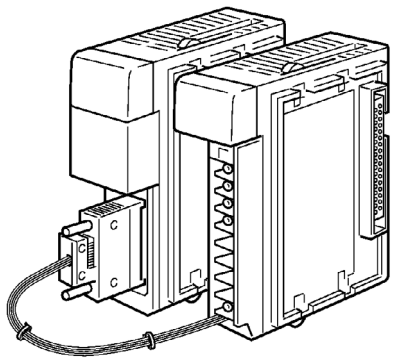

- Connect the power supply cable of the Analog Output Unit to the power supply connector of the Analog Power Supply Unit and secure the power supply cable connector with screws.
- The CQM1-IPS02 incorporates two power supply connectors. The power supply cable of the Analog Output Unit can be connected to either one of the power supply connectors.
- Refer to the *CQM1H Operation Manual (W363) or the CQM1 Operation Manual (W226)* for details on connecting an Analog Output Unit and Analog Power Supply Unit.

Note Do not pull the power supply cable, or the power supply cable may be broken or connector may be disconnected.

3-1-2 Wiring

Voltage Output

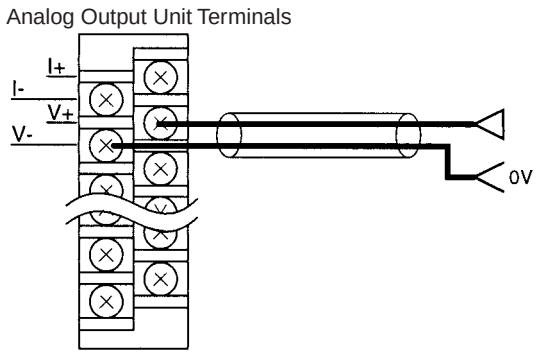

Current Output

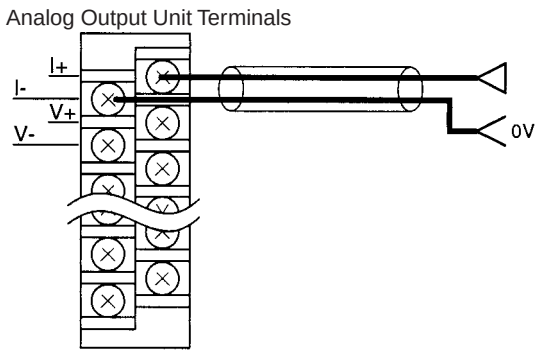

- Connect a two-conductor twisted-pair shielded cable to the Analog Output Unit.
- Do not install power lines or high-tension lines along in close proximity to the Analog Output Unit's output lines.
- The shielded wire must be grounded on the signal reception side.
- The negative side of each output lines are internally connected as shown in the following diagram.

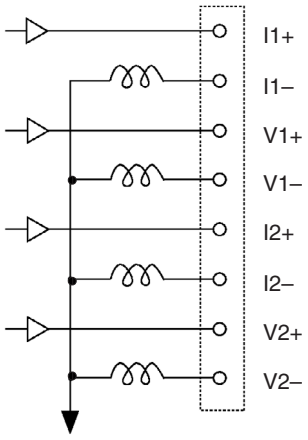

If the CQM1-IPS02 is connected to the Analog Output Unit and Analog Input Unit, the analog GND terminal of the Analog Output Unit and that of the Analog Input Unit will be connected to each other.

3-1-3 Terminal Arrangement

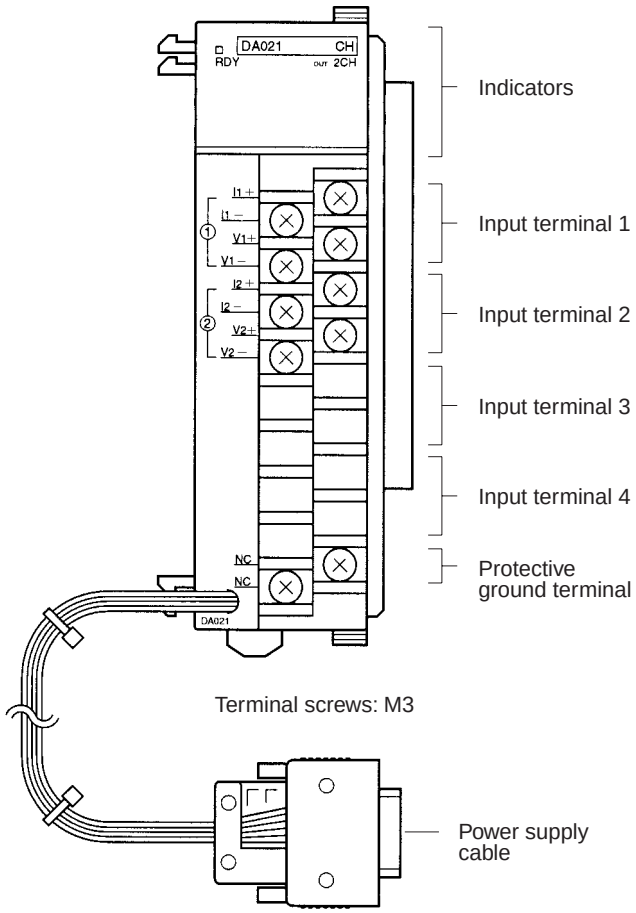

3-2 Bit Number Allocation

3-2-1 Word Allocation

Output words are allocated according to the mounting order (from left to right) of the Units. Consecutive two output words are allocated to the Analog Output Unit.

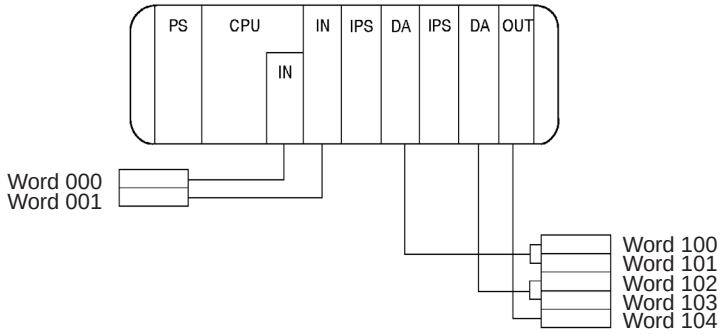

3-2-2 Bit Allocation

Word \ Bit	15	14	13	12	11	10	09	08	07	06	05	04	03	02	01	00
n	Output 1 Output data															
n + 1	Output 2 Output data															

Note The shaded parts do not have any influence on the output voltage (current) of the Analog Output Unit. All data is output in binary. Use a program to convert the data from BCD.

3-3 Programming and Adjustment

3-3-1 Programming

Data is output to the words that have been allocated to the Output Unit. For example, to output DM data, use the MOV (21) instruction as shown in the following ladder diagram.

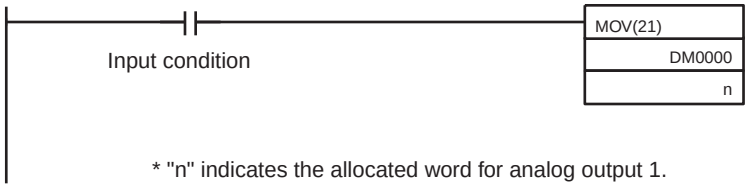

* "n" indicates the allocated word for analog output 1.

Scaling

The conversion of a value in a certain range to an output voltage or current in a certain range is called scaling.

An example for the conversion of data using the SCL3 and APR instructions is provided below. The SCL3 instruction cannot be used with the CQM1-CPU11 or CQM1-CPU21.

By using the SCL3 and APR instructions, output data conversion from the PC's data and data output can be performed simultaneously.

SCL3 Instruction

The following is a program example for BCD output data stored in DM 0000.

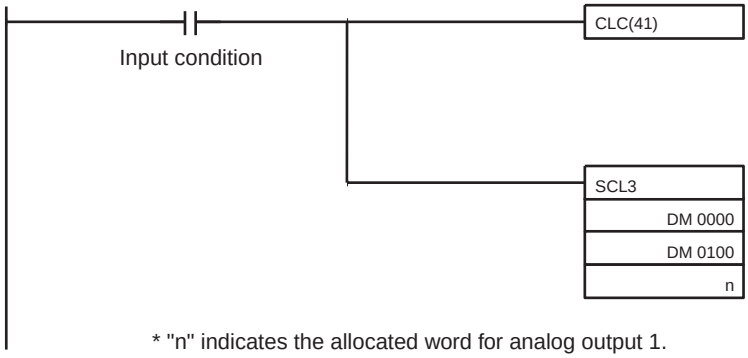

* "n" indicates the allocated word for analog output 1.

If the following DM settings are made, the scaling as shown in the following graph will be performed.

DM 0100	0030	(Hexadecimal) → (1)	Offset
DM 0101	0100	(BCD) → (2)	Gain (graph gradient)
DM 0102	0200	(Hexadecimal) → (3)	(3)/(2)
DM 0103	0400	(Hexadecimal) → (4)	Upper limit
DM 0104	FC00	(Hexadecimal) → (5)	Lower limit

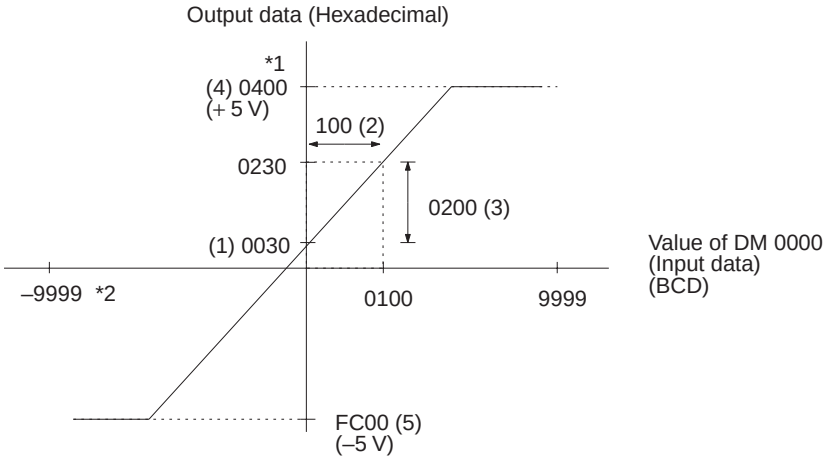

*1: Output data is hexadecimal.
*2: By executing the STC (40) instruction instead of the CLC (41) instruction, turning the carry (25504) ON, and executing the SLC3 instruction, the input value of the SLC3 instruction for DM 0000 will be treated as a negative value.

APR Instruction

The following is a program example for BCD output data stored in DM 0000

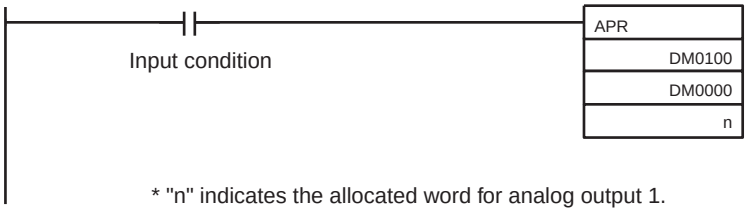

* "n" indicates the allocated word for analog output 1.

If the following DM settings are made, the scaling as shown in the following graph will be performed.

In this example, BCD data between 0 to 1000 will be scaled in order to output a current of 4 to 20 mA.

			Polygonal coordinate points and parameter data format
DM 0100	4000	(Hexadecimal) →	(Refer to the *Analog Output Unit Operation Manual* for details.)
DM 0101	03E8	(Hexadecimal) →	(1) X axis maximum value
DM 0102	019A	(Hexadecimal) →	(2) Y axis intersection
DM 0103	03E8	(Hexadecimal) →	Coordinate of (3)
DM 0104	07FF	(Hexadecimal) →	

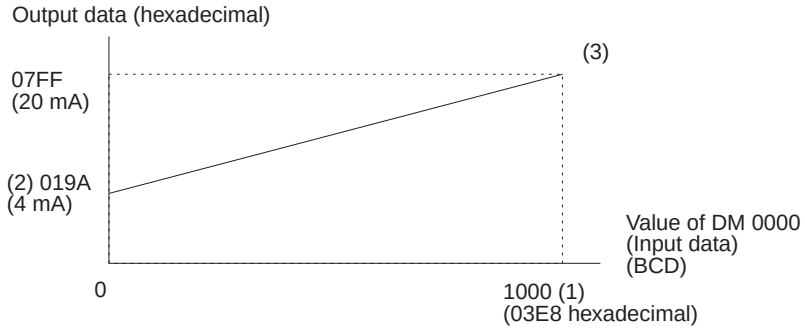

It is possible to convert data into a polygonal line as shown below. Refer to the linear approximation description for ARITHMETIC PROCESS – APR(—) in *Section 5* of the *CQM1/CPM1 Programming Manual (W228)* for details.

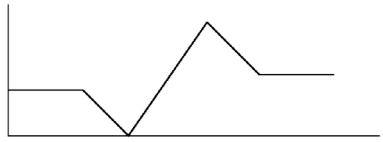

It is not possible to use the APR instruction to obtain negative output (2's complement). If required, execute the APR instruction in a positive range and convert it to negative output using a program. The following is an example of a program that converts data in a range of 0000 to 0FFF to data in a range of 8000 to 07FF.

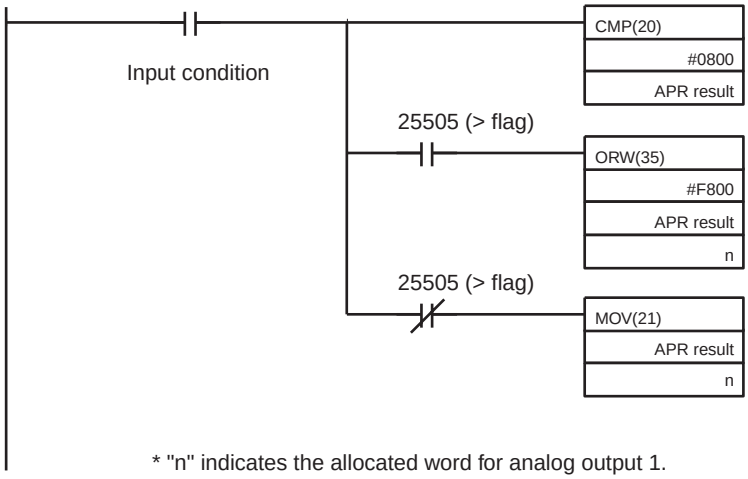

* "n" indicates the allocated word for analog output 1.

All data of the following graph is hexadecimal.

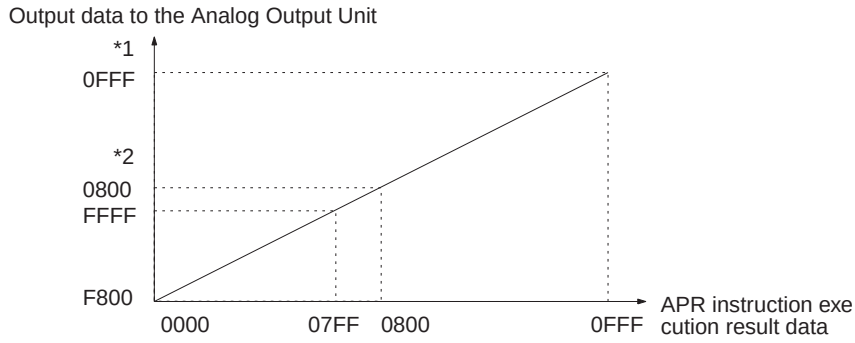

*1: Data 0FFF is equivalent to 07FF as output data.
*2: Data 0800 is equivalent to 0000 as output data.

3-3-2 Precaution

For PC system settings, select the cycle OUT refresh method for output refreshing (DM 6639) as much as possible. If the user needs to select direct OUT refresh method, take the following into consideration.

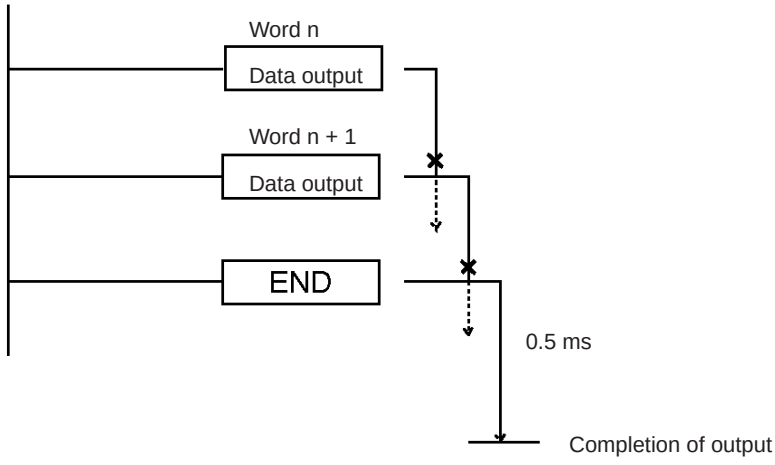

After executing an instruction, it takes approximately 0.5 ms for output completion. If a new instruction or the END instruction is executed within 0.5 ms, the completion of the output of the previous instruction may delay.

When turning PC on or off, the output terminal may have voltage momentarily (i.e., approximately 1 V for a few milliseconds). If this causes a problem, take an appropriate countermeasure externally.

Appendix A
Specifications

Standard Specifications

The standard specifications of the Analog Output Unit conform to those of the CQM1H/CQM1 PC.

Performance Specifications

CQM1-DA021 Analog Output Unit

Item	Specification	
No. of analog output points	2	
Output signal range	Voltage output	–10 to 10 V
	Current output	0 to 20 mA
External output permissible load resistance	Voltage output	1 kΩ min.
	Current output	520 Ω max. (including wiring impedance)
External output impedance	Voltage output	0.5 Ω max.
Resolution	Voltage output	1/4096
	Current output	1/2048
Accuracy	±0.5% (25°C) ±1.0% (0° to 55°C)	
Conversion speed	0.5 ms/2 points	
Insulation method	Output terminals and PC signals are insulated with photocoupler (Output terminals are not insulated from each other)	
Dimensions	32 x 110 x 107 (W x H x D)	
Internal current consumption	90 mA at 5 VDC	
Weight	300 g max.	

Dimensions

All dimensions are in millimeters.

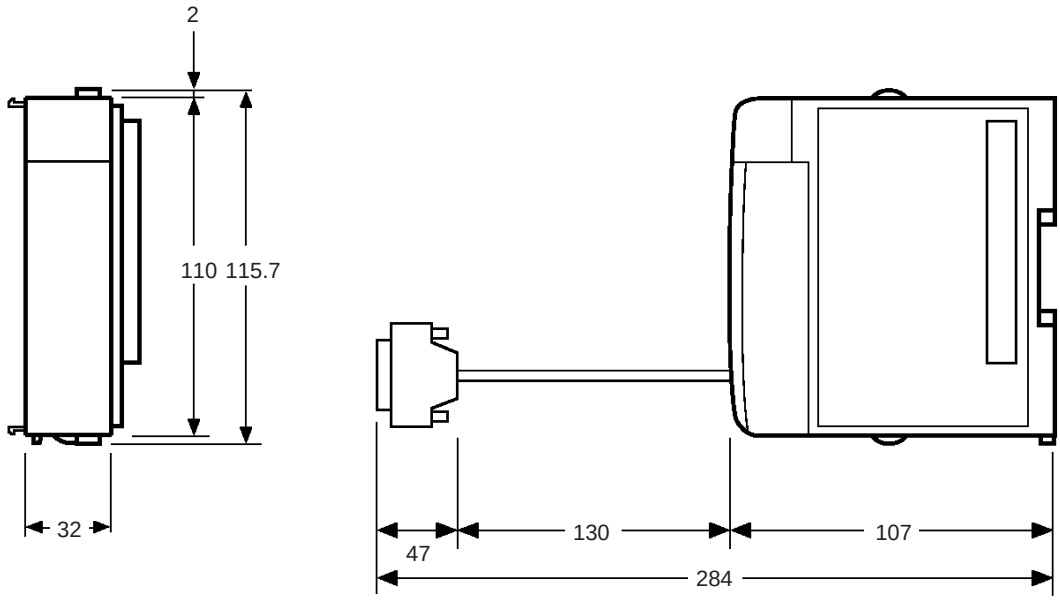

Appendix B
Troubleshooting

Analog Output Unit

Kind of error	Phenomenon	Cause	Remedy
Indicator	The RDY indicator is not lit.	1. The Unit is not connected properly. 2. No end cover is attached.	Refer to the *CQM1H Operation Manual (W363) or the CQM1 Operation Manual (W226)* and reset the Analog Output Unit.
Output	The output voltage or current does not change when output data changes.	The power supply cable is not connected to the Analog Power Supply Unit.	Connect the power supply cable.
	The output voltage or current does not match the output characteristics.	An external device with an impedance not within the permissible range is connected.	Check if the impedance of the external device is within the permissible range.
I/O Unit over	The CPU has an I/O Unit over error.	The total number of words used by the Units connected exceeds the maximum available words of the CPU.	Each Analog Output Unit uses two words. Check if the total number of words is exceeding the maximum available words of the CPU.

PART VI
Sensor Unit

CQM1-SEN01 Sensor Unit

CQM1-TU001 Remote Console

E3X-MA11 Optical Fiber Photoelectric Module

E3C-MA11 Photoelectric Module

E2C-MA11 Proximity Sensor Module

E39-M11 Dummy Module

SECTION 1
Features and System Configuration

This section provides the features and system configuration relating to the Sensor Unit and dedicated sensor modules.

1-1 Features 134
1-2 System Configuration 134
1-3 Connecting Devices 135
1-3-1 CPU Models 135
1-3-2 Remote Console 135
1-3-3 Sensor Modules 135
1-3-4 Applicable Sensors 135
1-4 System Construction 136

1-1 Features

- A maximum of four sensor modules in any combination and order can be mounted to a single CQM1-SEN01.
- Sensor modules can be connected to the CQM1-SEN01 via connectors and the CQM1-SEN01 can supply power to the modules, thus greatly saving wiring effort.
- The sensitivity of each sensor module is set by teaching. After power is supplied to sensor modules mounted to the CQM1-SEN01 and teaching is executed, the sensor modules will function properly. Teaching can be executed remotely by using the dedicated CQM1-TU001 Remote Console (sold separately).
- If the mode selector of each sensor module is set to SET, no signal is transmitted to the PC. Signals are transmitted according to the sensor operation only when the mode selector is set to RUN.
- At the time of system testing, no signals from Sensor Units will be retrieved by the PC if the Programming Console connected to the PC is in program mode.

1-2 System Configuration

The CQM1-SEN01 is a four-point input unit that occupies one input word. All bits, other than input bits, will not be used as work bits.

It is recommended that the CQM1-SEN01 be mounted to the left of the CQM1-OC□□□ Relay Contact Output Unit but not next to the CQM1-OC□□□ Relay Contact Output Unit, otherwise the sensor modules mounted to the CQM1-SEN01 will be influenced by noise that may be generated from the CQM1-OC□□□ Relay Contact Output Unit at the time of load switching.

The following illustration shows a CQM1H/CQM1 system configuration that includes the CQM1-SEN01.

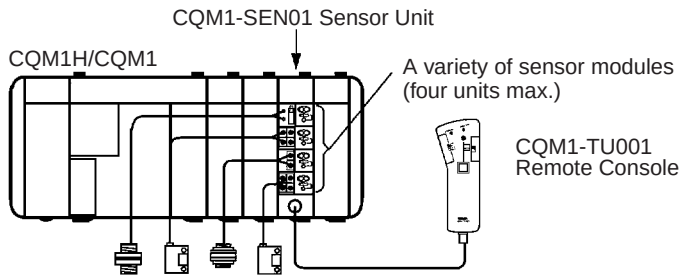

1-3 Connecting Devices

1-3-1 CPU Models

The Sensor Unit can be mounted to the following CPUs.

Name	Model
CQM1H-series CPU	CQM1H-CPU11
	CQM1H-CPU21
	CQM1H-CPU51
	CQM1H-CPU61
CQM1-series CPU	CQM1-CPU11-E
	CQM1-CPU21-E
	CQM1-CPU41-EV1
	CQM1-CPU42-EV1
	CQM1-CPU43-EV1
	CQM1-CPU44-EV1

1-3-2 Remote Console

Use the mode setting selector of the dedicated CQM1-TU001 Remote Console for the CQM1-SEN01 to set sensor modules mounted to the CQM1-SEN01 to operation monitor mode or teaching mode.

1-3-3 Sensor Modules

The following dedicated sensor modules can be mounted to the CQM1-SEN01.

Name	Model
Optical Fiber Photoelectric Module	E3X-MA11
Photoelectric Module	E3C-MA11
Proximity Sensor Module	E2C-MA11
Dummy Module	E39-M11

Note Mount the E39-M11 Dummy Module to any unused slot of the CQM1-SEN01 for dust prevention.

1-3-4 Applicable Sensors

The following sensors can be used with the E3X-MA11 Optical Fiber Photoelectric Module.

Sensing method	Model
Thru-beam	E32-T11L, E32-TC200, and E32-T11
Side view thru-beam	E32-T14L
Heat-resistive thru-beam	E32-T51
Screen thru-beam	E32-T16
Reflective	E32-D11L, E32-DC200, and E32-D11
Side view reflective	E32-D14L
Heat-resistive reflective	E32-D51
Retroreflective	E32-R21

Note The E3X-MA11 can be used with a variety of sensors in addition to those listed above. The E3X-MA11, however, cannot be used with the E32-DC9G, E32-DC9G4, E32-D61, or E32-D73.

The following sensors can be used with the E3C-MA11 Photoelectric Module.

Sensing method	Model
Thru-beam	E3C-S10, E3C-1, and E3C-2
Diffuse reflective	E3C-DS5W, E3C-DS10
Convergent reflective	E3C-LS3R
Mark detection reflective	E3C-VS1G, E3C-VS3R, E3C-VM35R, and E3C-VS7R

The following sensors can be used with the E2C-MA11 Proximity Sensor Module.

- E2C-CR5B
- E2C-CR8A
- E2C-CR8B
- E2C-X1A
- E2C-C1A
- E2C-X1R5A

1-4 System Construction

The CQM1H/CQM1 treats the CQM1-SEN01 as a four-point Input Unit. Inputs are allocated from word 000 including the built-in input bits of the CPU of the CQM1H/CQM1.

The following is an example of word allocation. The CQM1-SEN01 occupies one input word. Any bits without a sensor module cannot be used as work bits. Any bits connected to a dummy module is always OFF.

Example

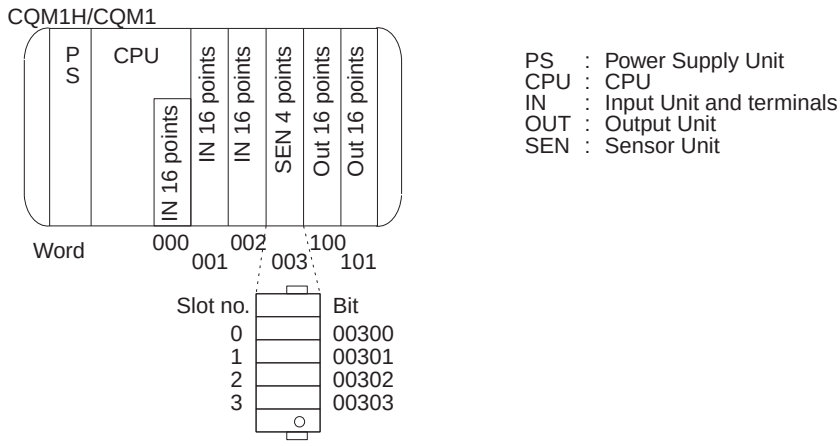

Note Refer to *3-2-3 I/O Allocation of the CQM1H Programming Manual or 3-2 Allocating I/O Bits* of the *CQM1 Programming Manual* for details on I/O word allocation.

SECTION 2
Nomenclature and Functions

This section provides the nomenclature and switch settings for the CQM1-SEN01, CQM1-TU001, E3X-MA11, E3C-MA11, and E2C-MA11.

2-1 Nomenclature 138
2-1-1 Sensor Unit 138
2-1-2 Remote Console 138
2-1-3 Optical Fiber Photoelectric Module 140
2-1-4 Photoelectric Module 141
2-1-5 Proximity Sensor Module 141
2-2 Switch Settings 142
2-2-1 E3X-MA11 Optical Fiber Photoelectric Module E3C-MA11 Photoelectric Module 142
2-2-2 E2C-MA11 Proximity Sensor Module 143

2-1 Nomenclature

2-1-1 Sensor Unit

CQM1-SEN01

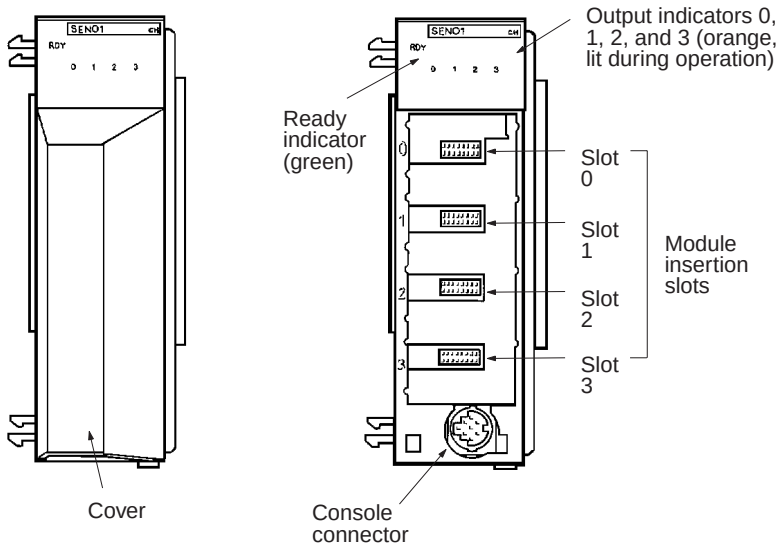

Indicators

Name	Color	Function
RDY	Green	Lit while the CQM1H/CQM1 is turned ON.
0 to 3 (Output)	Orange	Lit when the control outputs of sensor modules mounted to the CQM1-SEN01 are ON.

2-1-2 Remote Console

CQM1-TU001

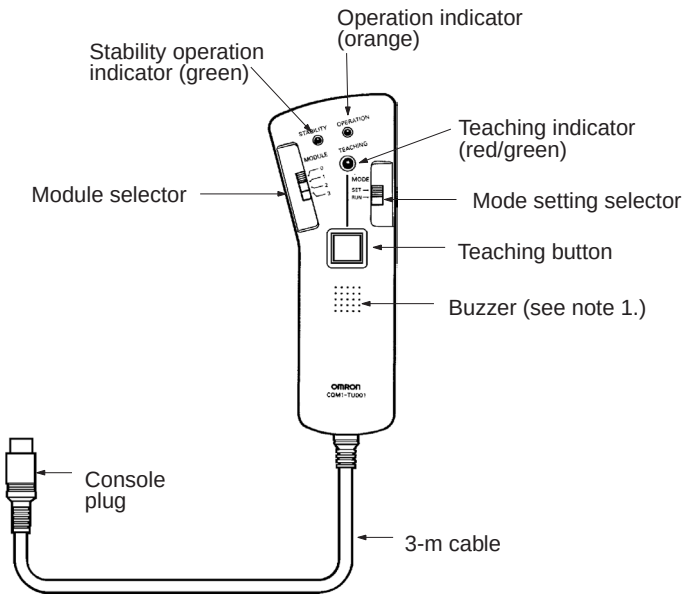

Note 1. The buzzer beeps intermittently when the flashing function (refer to pages 155 and 157) of the E3X-MA11 or E3C-MA11 connected to the CQM1-TU001 is working in teaching mode. The buzzer will stop beeping when the

teaching button is pressed. While teaching, the buzzer will beep once when the teaching button is pressed. If teaching is not successful, the buzzer will beep three more times.

2. Teaching operations on the CQM1-TU001 precede operations on sensor modules.

Indicators

Name	Color	Function
OPERATION	Orange	Lit when the control output of the sensor module specified with the module selector is ON.
STABILITY	Green	Lit when the operation of the sensor module specified with the module selector is stable.
TEACHING	Red/Green	Indicates the teaching status of sensitivity setting.

Features

- The module selected is set to the operation monitor mode or teaching mode using the mode setting selector of the CQM1-TU001.
- When the CQM1-TU001 is in operation monitor mode, the operation of the module selected with the module selector of the CQM1-TU001 can be monitored with the operation indicator and stability operation indicator of the CQM1-TU001.
- When the module selector is set to the 0, module 0 will be selected. Slide the module selector and set to 1 for module 1, 2 for module 2, and 3 for module 3.
- Set the mode setting selector to SET before setting the Sensor Unit to the teaching mode and set the mode setting selector to RUN before setting the Sensor Unit to the operation monitor mode.

Sensor Unit

The READY indicator (green) is lit when the I/O bus of the CQM1-SEN01 is ready to retrieve signals after the CQM1-SEN01's address is set properly with the CPU. The output indicators (orange) are lit according to the operation of each module inserted to slots 0 to 3 of the CQM1-SEN01.

Remote Console

- The stability operation indicator (green) and operation indicator (orange) of the CQM1-TU001 correspond to the stability operation indicator (green) and operation indicator (orange) of each sensor module.
- The teaching indicator (red/green) on the CQM1-TU001 is used as a teaching monitor for the module selected.
- The operation indicator is lit when a sensing object is within the sensing distance and the object will be detected. The stability operation indicator shows the stability of detecting or non-detecting operations. The stability operation indicator will be lit when a sensing object is located 0.93 times as near as the sensing distance or less. The stability operation indicator will be also lit when a sensing object is located 1.07 times as far as the sensing distance or more.

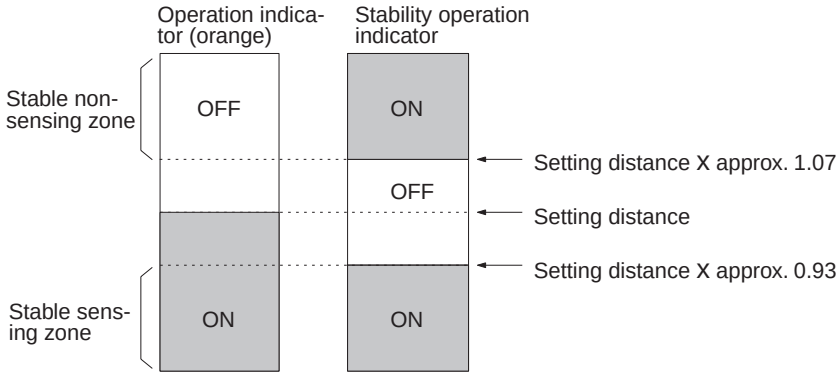

2-1-3 Optical Fiber Photoelectric Module

E3X-MA11

Front View

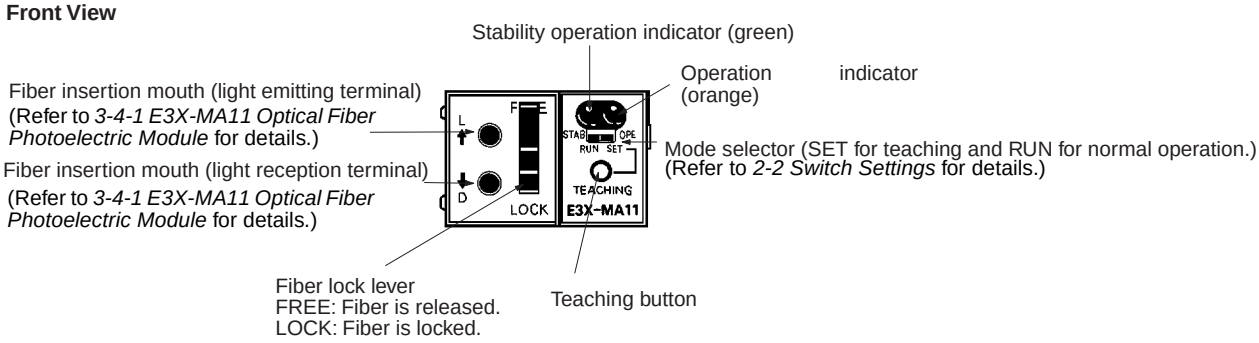

Indicators

Name	Color	Function
OPE	Orange	Lit when the control output is ON.
STAB	Green	Lit during stable light ON or dark ON, which can be selected with the operation mode selector.

Note When the mode selector is set to SET, the operation indicator and stability operation indicator are used to monitor teaching. Refer to *2-2 Switch Settings* for details.

Side View

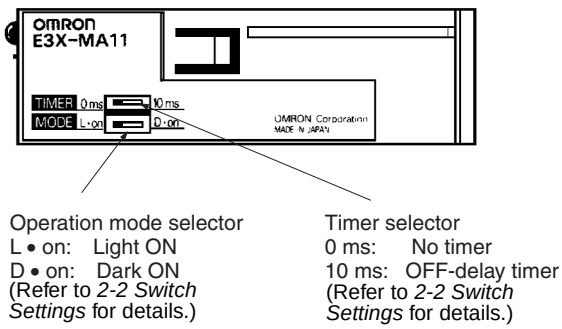

2-1-4 Photoelectric Module

E3C-MA11

Front View

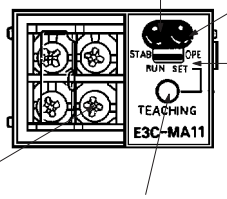

Stability operation indicator (green)

Operation indicator (orange)

Mode selector (SET for teaching and RUN for normal operation.) (Refer to *2-2 Switch Settings* for details.)

Sensor code connection terminals (Refer to *3-4-2 E3C-MA11 Photoelectric Module* for details.)

Teaching button

Indicators

Name	Color	Function
OPE	Orange	Lit when the control output is ON.
STAB	Green	Lit during stable light ON or dark ON, which can be selected with the operation mode selector.

Note When the mode selector is set to SET, the operation indicator and stability operation indicator are used to monitor teaching. Refer to *2-2 Switch Settings* for details.

Side View

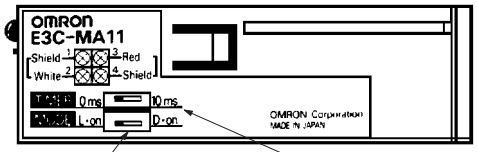

Operation mode selector
L • on: Light ON
D • on: Dark ON
(Refer to *2-2 Switch Settings* for details.)

Timer selector
0 ms: No timer
10 ms: OFF-delay timer
(Refer to *2-2 Switch Settings* for details.)

2-1-5 Proximity Sensor Module

E2C-MA11

Front View

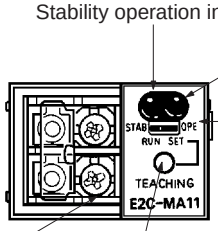

Stability operation indicator (green)

Operation indicator (orange)

Mode selector (SET for teaching and RUN for normal operation) (Refer to *2-2-2 E2C-MA11 Proximity Sensor Module* for details.)

Sensor code connection terminals (Refer to *3-4-3 E2C-MA11 Proximity Sensor Module* for details.)

Teaching button

Indicators

Name	Color	Function
OPE	Orange	Lit when the control output is ON.
STAB	Green	The stability operation indicator shows the stability of detecting or non-detecting operations. The stability operation indicator will be lit when a sensing object is located 0.93 times as near as the sensing distance or less. The stability operation indicator will be also lit when a sensing object is located 1.07 times as far as the sensing distance or more.

Note When the mode selector is set to SET, the operation indicator and stability operation indicator are used to monitor teaching. Refer to *4-1-1 E3X-MA11 Optical Fiber Photoelectric Module* for details.

Side View

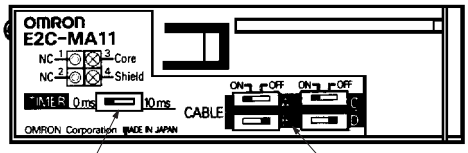

Timer selector
0 ms: No timer
10 ms: OFF-delay timer
(Refer to *2-2-2 E2C-MA11 Proximity Sensor Module* for details.)

Cable length switches
(Refer to *2-2-2 E2C-MA11 Proximity Sensor Module* for details.)

2-2 Switch Settings

2-2-1 E3X-MA11 Optical Fiber Photoelectric Module E3C-MA11 Photoelectric Module

Operation Mode Selector

Setting	Function
Light• on	The control output is ON when there is light incident.
Dark• on	The control output is ON when there is no light incident.

Timer Selector

Setting	Function
0 ms	No timer
10 ms	10-ms OFF delay timer active

Timing Charts

Timer selector set to OFF (0ms)	Timer selector set to ON (10 ms)
Operation mode selector set to L • on (Light ON) Light received Light not received Operation indicator (orange) ON / OFF Control output ON / OFF	Operation mode selector set to L • on (Light ON) Light received Light not received Operation indicator (orange) ON / OFF Control output ON / OFF 10 ms
Operation mode selector set to D • on (Dark ON) Light received Light not received Operation indicator (orange) ON / OFF Control output ON / OFF	Operation mode selector set to D • on (Dark ON) Light received Light not received Operation indicator (orange) ON / OFF Control output ON / OFF 10 ms

Note The operation mode selector and timer selector must be set before mounting the E3X-MA11 to the Sensor Unit.

Mode Selector

Setting	Function
RUN	Normal operation
SET	Axis adjustment or sensitivity adjustment (teaching).

2-2-2 E2C-MA11 Proximity Sensor Module

Cable Length Switches

Set the switches as shown below to the length of sensor cable being used either for standard cable lengths or after cutting the cable.

Sensor		Cable length				
		0 to 1 m	1 to 2 m	2 to 3 m	3 to 4 m	4 to 5 m
E2C-CR8A E2C-CR8B E2C-X1A E2C-C1A E2C-X1R5A	Position of the switches of the Amplifier Unit	A C B D Knob position	A C B D	A C B D	A C B D	A C B D

Note

1. If two cables of the same length and diameter are being attached together in parallel, position one of the cables 1 m above or below the other.
2. Set all switches to the right for the E2C-CR5B.

Timer Switch

Setting	Function
0 ms	No timer
10 ms	10-ms Off-delay timer active

The following is an example of a sensor output operation chart.

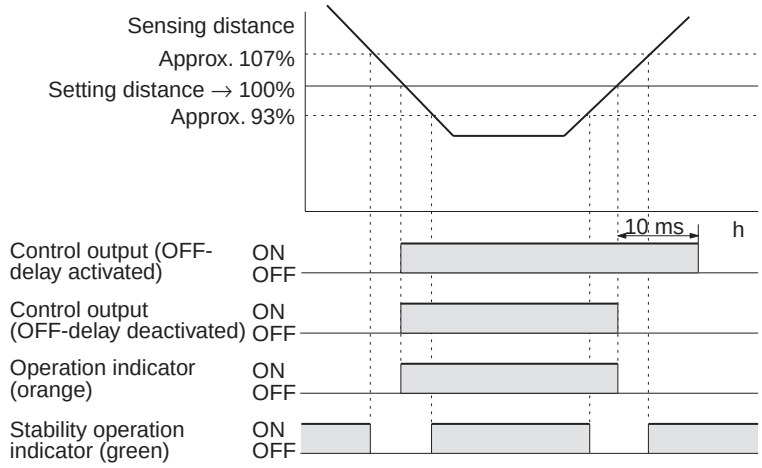

Note Set the switches on the side panel before mounting the Module to the Sensor Unit.

Mode Selector

Setting	Function
RUN	Normal operation
SET	Sensitivity adjustment (teaching)

Note

1. Refer to *3-4-1 E3X-MA11 Optical Fiber Photoelectric Module* for the fiber lock lever of the E3X-MA11.
2. Refer to *SECTION 4 Sensor Module Operation* for details on the operation of the mode selector and teaching button.

SECTION 3
Connections

This section describes the connections between the CQM1-SEN01 and E3X-MA11, E3C-MA11, E2C-MA11, and CQM1-TU001.

3-1 Wiring Precaution 146
3-1-1 E3X-MA11 Optical Fiber Photoelectric Module 146
3-1-2 Connecting Sensors to the E3C-MA11. 146
3-1-3 Connecting Sensors to the E2C-MA11. 147
3-2 Mounting and Dismounting the Sensor Module 148
3-3 Connection of CQM1-TU001 Remote Console 149
3-4 Connection of a Variety of Sensors. 149
3-4-1 E3X-MA11 Optical Fiber Photoelectric Module 149
3-4-2 E3C-MA11 Photoelectric Module 152
3-4-3 E2C-MA11 Proximity Sensor Module 152

3-1 Wiring Precaution

3-1-1 E3X-MA11 Optical Fiber Photoelectric Module

Fiber Head

The tightening torque applied to the fiber head of each Fiber Unit should be as follows:

Screw-mounting Model

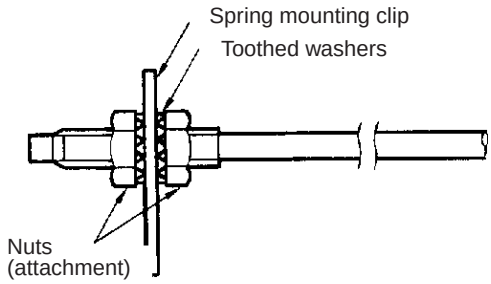

Column Model

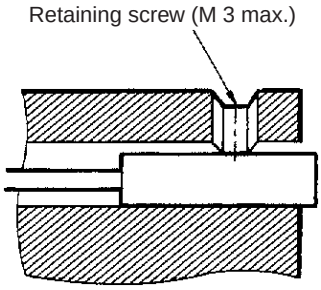

Fiber Unit	Tightening torque
M3/M4 screw	0.78 N • m max.
M6 screw	0.98 N • m max.
3-mm-dia. column	0.29 N • m max.
E32-D14L	0.98 N • m max.
E32-T16	0.49 N • m max.
E32-R21	0.59 N • m max.

Use a proper sized wrench.

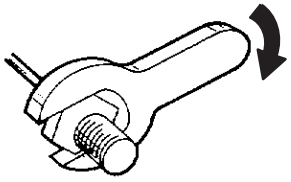

3-1-2 Connecting Sensors to the E3C-MA11

Strip the vinyl insulation off all the connection cords 12 mm from the ends for the receiver and projector terminals and expose each conductor 6 mm from the end of the conductor. Due to the small terminals, be careful not to short the wires when wiring.

The length of the cable connected to the terminals of the E3C-MA11 must be 10 m maximum without any extension terminals.

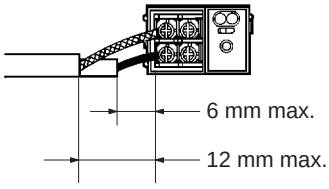

3-1-3 Connecting Sensors to the E2C-MA11

Do not use excessive force when securing the nut for E2C-X-series sensors. Always use a toothed washer.

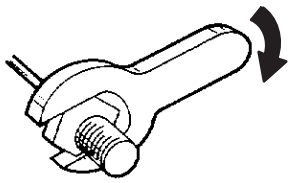

Model	Tightening torque
E2C-X1A	0.98 N • m
E2C-X1R5A	2.0 N • m

Note The above tightening torques assume that a toothed washer is being used.

Cylindrical Sensors without Screws

Use the following tightening torque when attaching a sensor with a set screw: 0.2 N • m max.

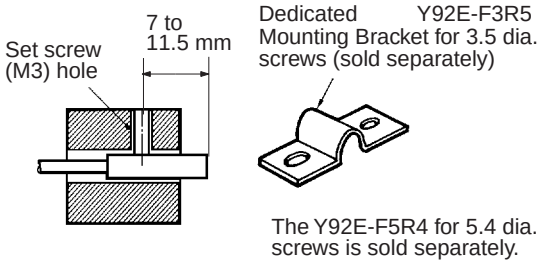

Effects of Surrounding Metal

When mounting the sensor within a metal panel, ensure that the clearances given in the following table are maintained.

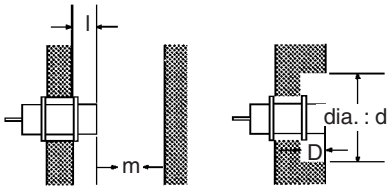

Model	Dimension (mm)			
	l	d	D	m
E2C-CR5B	2	6	2	1.5
E2C-CR8□	0	(3.5)	0	2.4
E2C-X1A	0	(5)	0	3
E2C-C1A	0	(5.4)	0	3
E2C-X1R5A	0	(8)	0	4.5

Note Diameters (d) in parentheses are the external diameters for shielded sensors. Although the E2C-CR5B is a shielded sensor, it cannot be mounted within a metal panel.

Mutual Interference

When installing two or more sensors face to face or side by side, ensure that the minimum distances given in the following table are maintained. Sensors can be mounted together in parallel, however, if their cable length switches are set to different values.

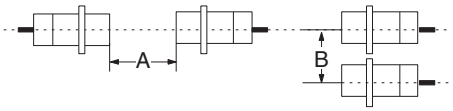

Model	Distance (mm)	
	A	B
E2C-CR5B	20	15
E2C-CR8□	20	15
E2C-X1A	20	15
E2C-C1A	20	15
E2C-X1R5A	20	15

3-2 Mounting and Dismounting the Sensor Module

Mounting

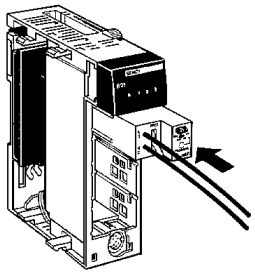

Mount the E3C-MA11 securely to the Sensor Unit so that the fiber sensor connector side is on the left and the indicator side is on the right.

Dismounting

A pulling tool is provided with the Sensor Unit. To dismount the E3C-MA11 from the Sensor Unit, hook the pulling tool onto the square hole on the right side of the E3C-MA11 and pull out the E3C-MA11 carefully.

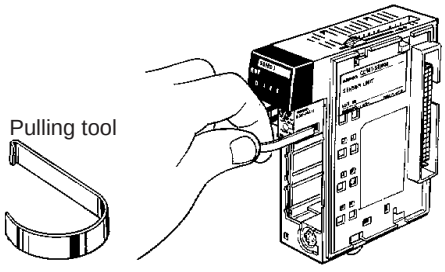

Note Be sure to turn off the CQM1-SEN001 before mounting or dismounting sensor modules.

3-3 Connection of CQM1-TU001 Remote Console

- Remove the cover of the Unit and insert the console plug into the console connector of the Unit so that the polarity of the console plug and the console connector will match.
- The console connector does not incorporate a lock mechanism. To disconnect the console plug, hold the console plug and pull it straight out.
- It is not possible to mount the cover to the Unit if the console plug is connected to the console connector.
- The console plug can be disconnected from the console connector even if the Unit is turned on. Do not, however, disconnect the console plug while the sensitivity of the Unit is being adjusted.

3-4 Connection of a Variety of Sensors

3-4-1 E3X-MA11 Optical Fiber Photoelectric Module

Connecting Fibers

Set the fiber lock lever of the E3X-MA11 to FREE before inserting an optical fiber cable to a fiber insertion mouth of the E3X-MA11 as shown in the following illustration.

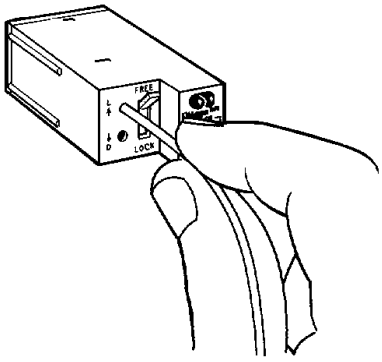

After inserting two optical fiber cables from the Fiber Units to the fiber insertion mouths of the E3X-MA11, set the fiber lock lever to LOCK to secure the optical fiber cables.

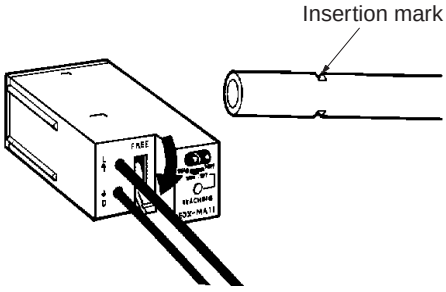

Insert the optical fiber cables into the E3X-MA11 before mounting the E3X-MA11 to the Sensor Unit.

Note If the tips of the two optical fiber cables are not inserted into the E3X-MA11 to the insertion marks, the sensing distance may be reduced.

Disconnecting Fibers

To disconnect the optical fiber cables from the E3X-MA11, hold and pull out the optical fiber cables carefully. Before disconnecting the optical fiber cables from the E3X-MA11, be sure to set the fiber lock lever to FREE.

Note If the optical fiber cables are disconnected without setting the fiber lock lever to FREE, the optical fiber cables may break and the E3X-MA11 may malfunction due to fragments of broken optical fiber cables.

Cutting Fiber

- Insert a 2.2-mm-dia. fiber into an E39-F4 Fiber Cutter and determine the length of the fiber to be cut.
- Press down the Fiber Cutter in a single stroke to cut the fiber.
- When the fiber is cut, insertion marks are inscribed on the fiber. The portion from the tip up to the insertion marks should be inserted into the E3X-MA11.

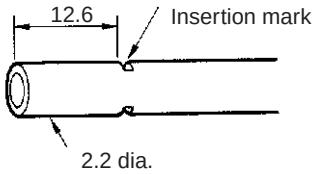

- To correctly inscribe the insertion mark, place the length of the fiber into the Fiber Cutter in direction 1 as illustrated below, and press down firmly in direction 2.

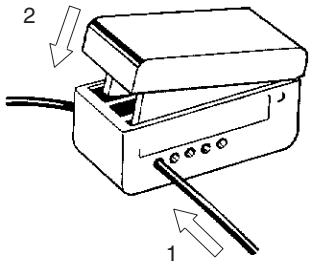

- The cutting holes cannot be used twice. If the same hole is used twice, the cutting face of the fiber will be rough and the sensing distance will be reduced. Always use an unused hole.

Use either one of the two rightmost holes to cut a thin fiber as follows:

1,2,3...

1. An attachment is temporarily fitted to each thin fiber before shipment.

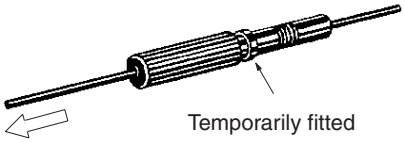

2. Secure the attachment after adjusting the position of it in the direction indicated by the arrow.
3. Insert the fiber into the E39-F4 and cut.

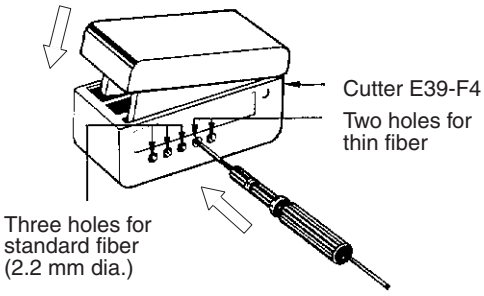

Note Insert the fiber in the direction indicated by the arrow.

Connection

- Do not pull or press the Fiber Unit with excessive force. The thin-type optical fiber cable withstands a force of 9.8N maximum and the standard-type optical fiber cable withstands a force of 29.4N maximum. Handle the optical fiber cables with care because they are thin.
- Do not bend the Fiber Unit with a radius smaller than the permissible radius. Make all bends in the optical fiber cable at least 20 mm from all connected units.

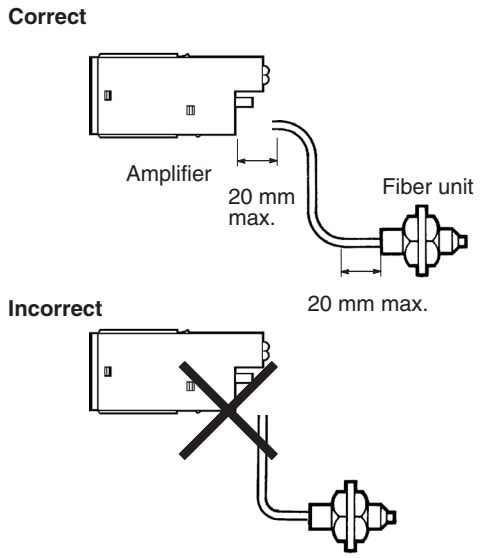

- Do not apply excess force on Fiber Units.

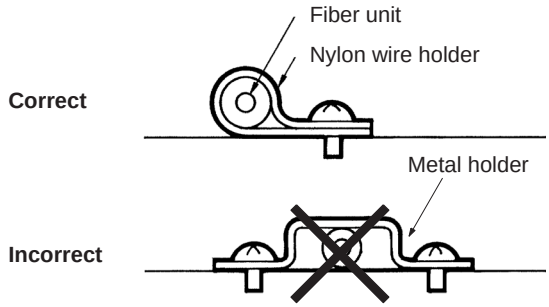

- The Fiber Head could be broken by excessive vibration. To prevent this, the following is effective:

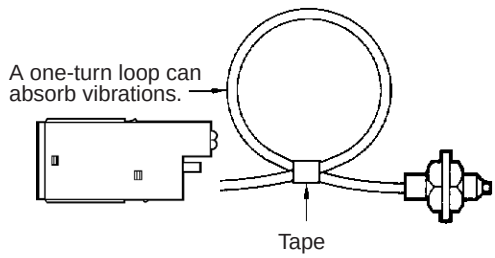

3-4-2 E3C-MA11 Photoelectric Module

Connection

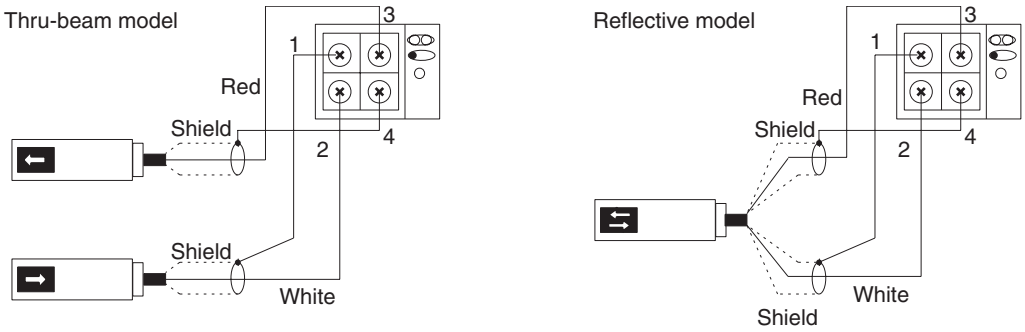

Note

1. Strip the vinyl insulation off all the connection cords 12 mm from the ends for the receiver and projector terminals and expose each conductor 6 mm from the end of the conductor. Due to the small terminals, be careful not to short the wires when wiring.
2. The length of the cable connected to the terminals of the E3C-MA11 must be 10 m maximum without any extension terminals.

3-4-3 E2C-MA11 Proximity Sensor Module

Connection

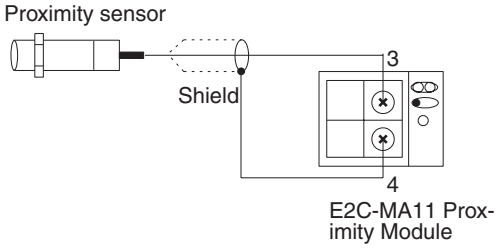

SECTION 4
Sensor Module Operation

This section provides information on the operation of the CQM1-SEN01.

4-1 Operation without CQM1-TU001 Remote Console 154
4-1-1 E3X-MA11 Optical Fiber Photoelectric Module 154
4-1-2 E3C-MA11 Photoelectric Module 156
4-1-3 E2C-MA11 Proximity Sensor Module 157

4-1 Operation without CQM1-TU001 Remote Console

When the CQM1-TU001 is connected to the CQM1-SEN01, operations on the CQM1-TU001 precede operations on sensor modules. Operations without connecting the CQM1-TU001 is explained hereunder.

4-1-1 E3X-MA11 Optical Fiber Photoelectric Module

Sensitivity Adjustment

There are three sensitivity adjustment methods. Choose the most optimum method according to the application.

Maximum Sensitivity Setting

Use the following procedure to set for maximum sensitivity

1,2,3...

1. Set the mode selector to SET. When using a thru-beam fiber sensor, adjust the optical axis using the flashing function of the thru-beam fiber sensor.
2. Press the teaching button for 3 s minimum. The teaching indicator will turn from orange to green in 3 s.
3. Set the mode selector to RUN to complete the maximum sensitivity setting of the E3X-MA11.

Note The maximum sensitivity of the Sensor Unit can be automatically set regardless of the set distance or light reception.

Teaching without a Sensing Object (Only for Diffusive Reflective Sensor)

If any background object exerts an influence when setting the maximum sensitivity on the E3X-MA11, try the following method.

1,2,3...

1. Locate the sensor head in the sensing range of the sensor.
2. Set the mode selector to SET.
3. Press the teaching button. The teaching indicator (orange) will be lit.
4. Set the mode selector to RUN. If teaching is successful, the stability operation indicator (green) will be lit. If teaching is unsuccessful, the stability operation indicator will flash. In this case make sure that the optical fiber cable of the sensor is connected securely, and then change the sensing distance that has been set and repeat from step 2.

Note The sensitivity of the E3X-MA11 is set to maximum if teaching is performed with very little light or if the sensor head is not located within the sensing distance. If stable detection of objects is not possible after teaching, try teaching with a sensing object as described in the following.

Teaching with a Sensing Object

Teaching with a sensing object is recommended if delicate sensing operation is required.

1,2,3...

1. Locate the sensor head in the sensing range of the sensor.
2. Set the mode selector to SET. When using a thru-beam fiber sensor, adjust the optical axis using the flashing function of the thru-beam fiber sensor.
3. Locate the object at the sensing position and press the teaching button.

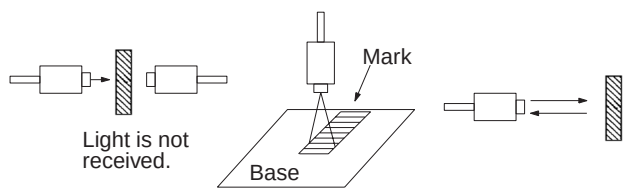

The teaching indicator will turn orange.

4. Move the object and press the teaching button. If teaching is successful, the teaching indicator will turn from orange to green. If teaching is unsuccessful, the teaching indicator (orange) will flash, in which case change the position of the object and the sensing distance that have been set and repeat from step 3.

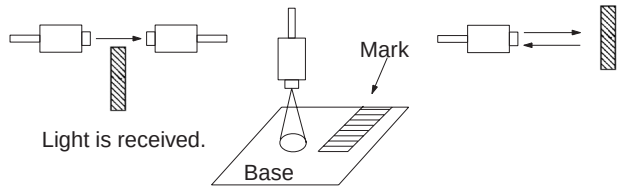

5. Set the mode selector to RUN to complete the sensitivity setting on the E3X-MA11.

Light Axis Adjustment with Flashing Function

- This function enables the user to easily adjust the light axis of a thru-beam fiber with the light source flashing.
- If the light projection fiber head axis and the light reception fiber head axis do not agree with each other, and the amount of light received becomes 90% of the peak value or less, the flashing function of the E3X-MA11 will operate. The E3X-MA11 retains the peak value when the mode selector is set to SET so that the axes of the fiber heads can be easily adjusted to agree with each other. When the axes agree, the tip of the fiber for light emission will be lit.
- If a Remote Console is connected to the Sensor Unit, the buzzer of the Remote Console will beep intermittently when the flashing function starts operating. The buzzer will stop beeping when the axes agree and the tip of the fiber for light emission is lit.
- Teaching is possible by pressing the teaching button while the flashing function is operating.

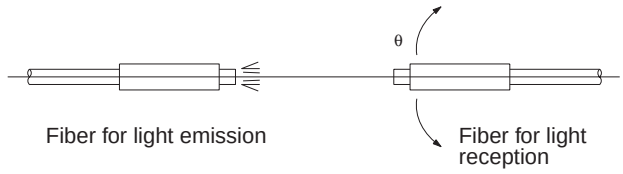

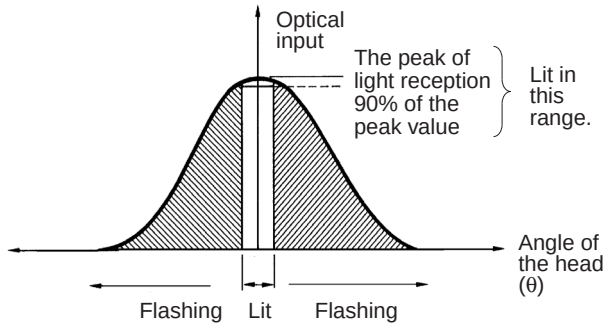

4-1-2 E3C-MA11 Photoelectric Module

Sensitivity Adjustment

There are three sensitivity adjustment methods. Choose the most optimum method according to the application.

Maximum Sensitivity Setting

1,2,3...

1. Set the mode selector to SET. When using a thru-beam fiber sensor, adjust the optical axis using the flashing function of the thru-beam fiber sensor.
2. Press the teaching button for 3 s minimum. The teaching indicator will turn from orange to green in 3 s.
3. Set the mode selector to RUN to complete the maximum sensitivity setting of the E3C-MA11.

Note The maximum sensitivity of the Sensor Unit can be automatically set regardless of the set distance or light reception.

Teaching without a Sensing Object (Only for Diffusive Reflective Sensor)

If any background object exerts an influence when setting the maximum sensitivity on the ECX-MA11, try the following method.

1,2,3...

1. Locate the sensor head in the sensing range of the sensor.
2. Set the mode selector to SET.
3. Press the teaching button. The teaching indicator (orange) will be lit.
4. Set the mode selector to RUN. If teaching is successful, the stability operation indicator (green) will be lit. If teaching is unsuccessful, the stability operation indicator will flash. In this case make sure that the sensor cable is connected securely, and then change the sensing distance that has been set and repeat from step 2.

Note The sensitivity of the E3C-MA11 is set to maximum if teaching is performed with very little light or if the sensor head is not located within the sensing distance. If stable detection of objects is not possible after teaching, try teaching with a sensing object as described in the following.

Teaching with a Sensing Object

Teaching with a sensing object is recommended if delicate sensing operation is required.

1,2,3...

1. Locate the sensor head in the sensing range of the sensor.
2. Set the mode selector to SET. When using a thru-beam fiber sensor, adjust the optical axis using the flashing function of the thru-beam fiber sensor.
3. Locate the object at the sensing position and press the teaching button.

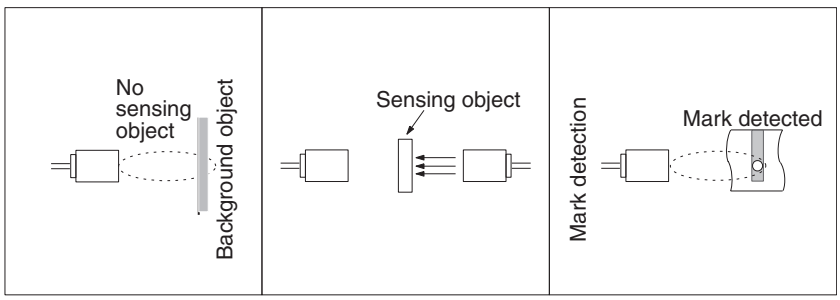

The teaching indicator will turn orange.

4. Move the object and press the teaching button. If teaching is successful, the teaching indicator will turn from orange to green. If teaching is unsuccessful, the teaching indicator (orange) will flash, in which case change the

position of the object and the sensing distance that have been set and repeat from step 3.

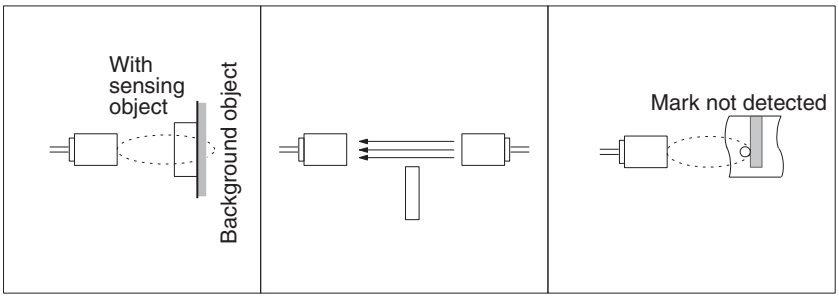

5. Set the mode selector to RUN to complete the sensitivity setting on the E3X-MA11.

Light Axis Adjustment with Flashing Function

If the light projection fiber head axis and the light reception fiber head axis do not agree with each other, and the amount of light received becomes 90% of the peak value or less, the flashing function of the E3C-MA11 will operate. The E3C-MA11 retains the peak value when the mode selector is set to SET so that the axes of the fiber heads can be easily adjusted to agree with each other. When the axes agree, the indicator on the light projection fiber head will be lit. The E3C-DS10T does not incorporate an indicator on the light projection fiber head.
The indicator on the light projection fiber head will work as an operation indicator when the E3C-MA11 is in RUN mode.

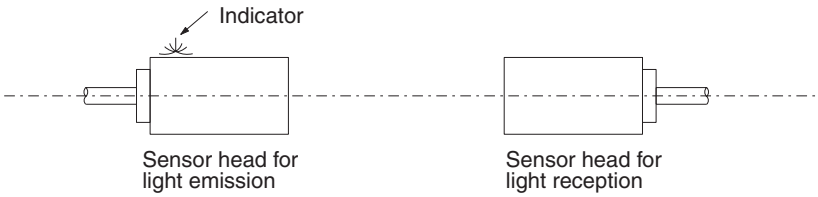

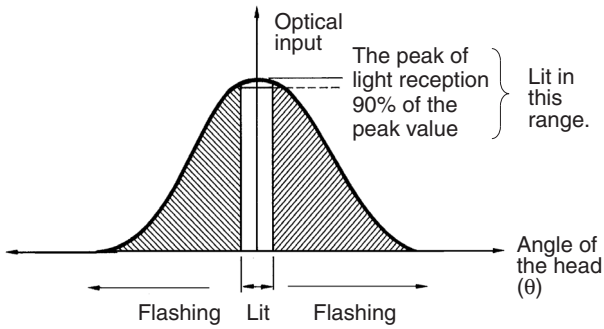

4-1-3 E2C-MA11 Proximity Sensor Module

Be sure to perform teaching before using the E2C-MA11 Proximity Sensor Module.

Sensitivity Adjustment

There are three sensitivity adjustment methods. Choose the most ideal method according to the application.

Teaching without a Sensing Object

Teaching without a sensing object is recommended when using the E2C-MA11 as a standard proximity sensor.

1,2,3...

1. Locate the sensor head in the sensing range of the sensor.
2. Set the mode selector to SET.

3. Press the teaching button. The teaching indicator (orange) will be lit.

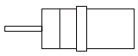

4. Set the mode selector to RUN to complete the sensitivity setting on the E2C-MA11.

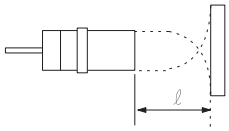

ON point

The ON point will be automatically set at the maximum value of the stable sensing distance. If teaching is unsuccessful, the stability operation indicator will flash. In this case make sure that the optical fiber cable of the sensor is connected securely and that there is no sensing object, and then repeat from step 3.

Teaching with a Sensing Object

Teaching with a sensing object is recommended for sensing level differences or double-sheet detection.

1,2,3...

1. Place the sensor head in the sensing range of the sensor.
2. Set the mode selector to SET.
3. Place the object at the sensing position at which the desired output will be OFF and press the teaching button.

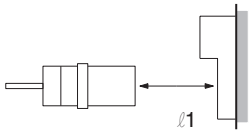

Desired output at ℓ_1 : OFF

The teaching indicator will turn orange.

4. Move the object to the position where you want to turn ON the output and press the teaching button. If teaching is successful, the teaching indicator will turn from orange to green.

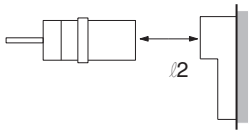

Desired output at ℓ_2 : ON

5. Set the mode selector to RUN to complete the sensitivity setting on the E3X-MA11. The ON point will be set midway between the points set in steps 3. and 4. If teaching is unsuccessful, the teaching indicator (orange) will flash, in which case check that the sensor cable is connected, change the position of the object and the sensing distance that have been set, and repeat from step 3.

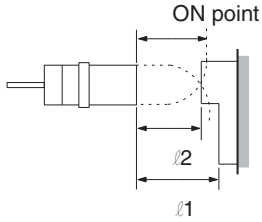

Note The sensor may not properly reset after detection when teaching detection of subtle changes. Always check to be sure the sensor is resetting even if the indicator shows that teaching is OK.

Teaching for Position Control

Teaching for position control is recommended when specifying the ON point for the detection of objects which are too close.

1,2,3...

1. Place the sensor head in the sensing range of the sensor.
2. Set the mode selector to SET.
3. Press the teaching button. The teaching indicator (orange) will be lit.

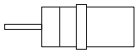

4. Move the object to the position where you want the output ON and press the teaching button. If teaching is successful, the teaching indicator will turn from orange to green.

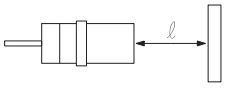

5. Do not move the sensing object and press the teaching button a third time. If teaching is successful, the teaching indicator will turn from green to orange.

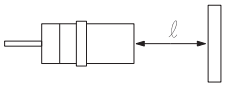

6. Set the mode selector to RUN to complete the sensitivity setting on the E3X-MA11. If teaching is unsuccessful, the teaching indicator (orange) will flash, in which case make sure that the sensor cable is connected, change the position of the object and the sensing distance that have been set, and repeat from step 3.

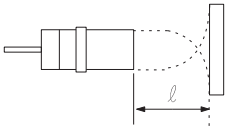

ON point

Note Teach within the stable sensing range. Although indicators may indicate that teaching is OK even outside of this range, the sensor may not reset properly after detection. Always check to be sure the sensor is resetting after teaching.

SECTION 5
Remote Console Operation

This section provides information on the operation of the CQM1-TU001 Remote Console.

5-1 Mode Setting 162
5-2 Sensitivity Adjustment 162
5-2-1 E3X-MA11 Optical Fiber Photoelectric Module
E3C-MA11 Photoelectric Module 162
5-2-2 E2C-MA11 Proximity Sensor Module 163

5-1 Mode Setting

RUN Mode The CQM1-TU001 operates normally with sensors connected in this mode. A sensor module can be selected with the module selector of the CQM1-TU001 in run mode and the operation of the sensor module can be monitored with the operation indicator and stability operation indicator of the CQM1-TU001.

SET Mode Sensors can be set or their sensitivities can be adjusted in this mode.

Note Before using the CQM1-TU001, set the mode selector of each sensor module to RUN.

5-2 Sensitivity Adjustment

5-2-1 E3X-MA11 Optical Fiber Photoelectric Module E3C-MA11 Photoelectric Module

Note

1. Be sure to perform teaching before use.
2. When the CQM1-TU001 is connected to a sensor unit, operations on the CQM1-TU001 precede operations on sensor modules.

Maximum Sensitivity Setting

1,2,3...

1. Connect the CQM1-TU001 to the CQM1-SEN01.
2. Set the module selector to the number of the sensor module on which teaching will be performed, and the set the mode selector of the sensor module to RUN.
3. Set the mode setting selector of the CQM1-TU001 to SET.
4. Press the CQM1-TU001 teaching button for approximately 3 s (minimum) until the teaching indicator changes to red from green.
5. Set the mode selector to RUN to complete the maximum sensitivity setting of the E3X-MA11.

Note The maximum sensitivity of the Sensor Unit can be automatically set regardless of the set distance or light reception.

Teaching without a Sensing Object (Only for Diffusive Reflective Sensor)

1,2,3...

1. Place the sensor head in the sensing range of the sensor.
2. Connect the CQM1-TU001 to the CQM1-SEN01.
3. Set the module selector to the number of the sensor module on which teaching will be performed, and the set the mode selector of the sensor module to RUN.
4. Set the mode setting selector of the CQM1-TU001 to SET.
5. Press the teaching button. The teaching indicator (red) will be lit.
6. Set the mode selector to RUN. If teaching is successful, the stability operation indicator (green) will be lit. If teaching is unsuccessful, the stability operation indicator will flash. In this case make sure that the optical fiber cable of the sensor is connected securely, and then change the sensing distance that has been set and repeat from step 4.

Note The sensitivity of the E3X-MA11 is set to maximum if teaching is performed with very little light or if the sensor head is not located within the sensing distance. If stable detection of objects is not possible after teaching, try teaching with a sensing object as described in the following.

Teaching with a Sensing Object

1,2,3...

1. Place the sensor head in the sensing range of the sensor.
2. Connect the CQM1-TU001 to the CQM1-SEN01.
3. Set the module selector to the number of the sensor module on which teaching will be performed, and the set the mode selector of the sensor module to RUN.
4. Set the mode setting selector of the CQM1-TU001 to SET.
5. Place the object at the sensing position and press the teaching button. The teaching indicator will turn red.
6. Move the object and press the teaching button. If teaching is successful, the teaching indicator will turn from red to green. If teaching is unsuccessful, the teaching indicator (red) will flash, in which case change the position of the object and the sensing distance that have been set and repeat from step 5.
7. Set the mode selector to RUN to complete the sensitivity setting on the E3X-MA11.

5-2-2 E2C-MA11 Proximity Sensor Module

Note

1. Be sure to perform teaching before use.
2. When the CQM1-TU001 is connected to a sensor unit, operations on the CQM1-TU001 precede operations on sensor modules.

Teaching without a Sensing Object

1,2,3...

1. Place the sensor head in the sensing range of the sensor.
2. Connect the CQM1-TU001 to the CQM1-SEN01.
3. Set the module selector to the number of the sensor module on which teaching will be performed.
4. Set the mode setting selector of the CQM1-TU001 to SET.
5. Press the teaching button. The teaching indicator (red) will be lit.
6. Set the mode selector to RUN to complete the sensitivity setting on the E2C-MA11. If teaching is unsuccessful, the teaching indicator will flash. In this case make sure that the optical fiber cable of the sensor is connected securely and that there is no sensing object, and then repeat from step 5.

Teaching with a Sensing Object

1,2,3...

1. Place the sensor head in the sensing range of the sensor.
2. Connect the CQM1-TU001 to the CQM1-SEN01.
3. Set the module selector to the number of the sensor module on which teaching will be performed.
4. Set the mode setting selector of the CQM1-TU001 to SET.
5. Place the object at the sensing position at which the desired output will be OFF and press the teaching button. The teaching indicator will turn red.
6. Move the object to the position where you want to turn ON the output and press the teaching button. If teaching is successful, the teaching indicator will turn from red to green.
7. Set the mode selector to RUN to complete the sensitivity setting on the E3X-MA11. If teaching is unsuccessful, the teaching indicator (red) will flash, in which case make sure that the sensor cable is connected, change the position of the object and the sensing distance that have been set, and repeat from step 5.

Teaching for Position Control

1,2,3...

1. Place the sensor head in the sensing range of the sensor.
2. Connect the CQM1-TU001 to the CQM1-SEN01.
3. Set the module selector to the number of the sensor module on which teaching will be performed.
4. Set the mode setting selector of the CQM1-TU001 to SET.
5. Press the teaching button. The teaching indicator (red) will be lit.
6. Move the object to the position where you want to turn ON the output and press the teaching button. If teaching is successful, the teaching indicator will turn from red to green.
7. Do not move the sensing object and press the teaching button a third time. If teaching is successful, the teaching indicator will turn from green to orange.
8. Set the mode selector to RUN to complete the sensitivity setting on the E3X-MA11. If teaching is unsuccessful, the teaching indicator (red) will flash, in which case make sure that the sensor cable is connected, change the position of the object and the sensing distance that have been set, and repeat from step 5.

Appendix A
Specifications

CQM1-SEN01 Sensor Unit

Item	Specification
Input points	4 max.
Current consumption	600 mA max. at 5 VDC (supplied from Power Supply Unit).
Input response time	8 ms max.
Insulation resistance	20 MΩ min. at 500 VDC between FG terminal and all signal terminals.
Dielectric strength	1,000 VAC at 50/60 Hz for 1 minute between FG terminal and all signal terminals.
Noise immunity	1,500 V (peak to peak) with a pulse width of 100 ns to 1 μs and a 1-ns rising edge.
Vibration resistance	10 to 150 Hz, 0.15-mm double amplitude for 80 min. each in X, Y, and Z directions.
Shock resistance	100 m/s^2 three times each in X, Y, and Z directions.
Ambient temperature	Operating: 0° to 55°C Storage: –20° to 75°C
Operating ambient humidity	10% to 90% with no condensation
Grounding	Ground Sensor Unit at a resistance of less than 100 Ω
Enclosure rating	Enclosed mounting
Dimension (mm)	32 × 110 × 120 (W × H × D)
Weight	160 g (Module excluded)
Display	READY (green); output (orange)

CQM1-TU001 Remote Console

Item	Specification
Cable length	3 m
Power supply voltage	5 VDC (supplied from Sensor Unit)
Current consumption	60 mA max.
Ambient temperature	Operating: 0° to 55°C Storage: –20° to 75°C
Operating ambient humidity	10% to 90% with no condensation
Enclosure rating	Enclosed mounting
Dimension (mm)	52.9 × 145 × 16.5 (W × H × D)
Weight	165 g including 3-m cable

E3X-MA11 Optical Fiber Photoelectric Module

Item	Rating
Light source (wavelength)	Red LED (660 nm)
Power supply voltage	9 VDC (supplied from Sensor Unit)
Current consumption	50 mA max.
Response time	500 μs max.
Timer function	10-ms OFF-delay timer (see note)
Indicators	Operation indicator (orange) and stability operation indicator (green)
Teaching monitor	Indicators (operation indicator and stability operation indicator)
Output mode	Light ON and Dark ON (selectable)
Dimension (mm)	28.1 × 17.8 × 62.1 (W × H × D)
Weight	23 g

Note The 10-ms OFF-delay timer function can be turned OFF.

E3C-MA11 Photoelectric Module

Item	Rating
Power supply voltage	9 VDC (supplied from Sensor Unit)
Current consumption	50 mA max.
Response time	1.5 ms max.
Timer function	10-ms OFF-delay timer (see note)
Indicators	Operation indicator (orange) and stability operation indicator (green)
Teaching monitor	Indicators (operation indicator and stability operation indicator are used)
Output mode	Light ON and Dark ON (selectable)
Dimension (mm)	28.1 × 17.8 × 62.1 (W × H × D)
Weight	26 g

Note The 10-ms OFF-delay timer function can be turned OFF.

E2C-MA11 Proximity Sensor Module

Item		Rating			
Power supply voltage		9 VDC (supplied from Sensor Unit)			
Current consumption		50 mA max.			
Sensing distance adjustment range (see note 1)	Setting for Teaching without Sensing Object (see note 2)	E2C-CR5B	E2C-CR8A E2C-CR8B	E2C-X1A E2C-C1A	E2C-X1R5A
		0.45 mm min.	0.72 mm min.	0.9 mm min.	1.35 mm min.
	Setting for Teaching with Sensing Object and Teaching for Position Control	0.1 to 0.7 mm	0.16 to 1.2 mm	0.2 to 1.5 mm	0.3 to 2 mm
Temperature influence		±25% max. of sensing distance at 23°C between 0 and 55°C	±10% max. of sensing distance at 23°C between 0 and 55°C		
Differential travel		15% max. of rated sensing distance	10% max. of rated sensing distance		
Response delay		Refer to the response frequency for the proximity sensor			
Output type		NO (ON when sensing object detected)			
Timer functions		Off-delay timer fixed at 10 ms (see note 3)			
Cable length compensation		Mode set via four ganged switches			
Indicators		Operation indicator (orange) and stability indicator (green)			
Teaching monitor		Indicator (orange/green indicator: operation, using stability indicator)			
Dimension (mm)		28.1 × 17.8 × 62.1 (W × H × D)			
Weight		26 g			

Note 1. Perform positioning teaching within the stable sensing range. Even if teaching is performed successfully outside the stable sensing range, the E2C-MA11 in operation may not reset properly. Furthermore, even if teaching is performed successfully with or without a sensing object, the E2C-MA11 may not reset properly after a delicate change is detected.

2. With no surrounding metal or background objects.

3. Off-delay timer can also be turned off with a switch.

Dimensions

CQM1-SEN01 Sensor Unit

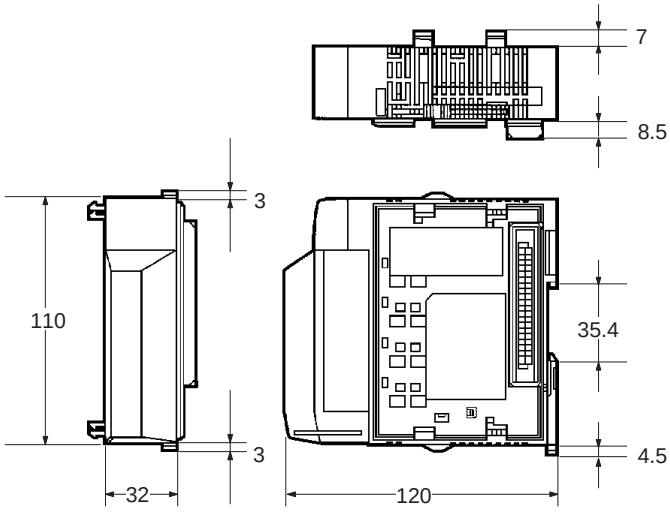

CQM1-TU001 Remote Console

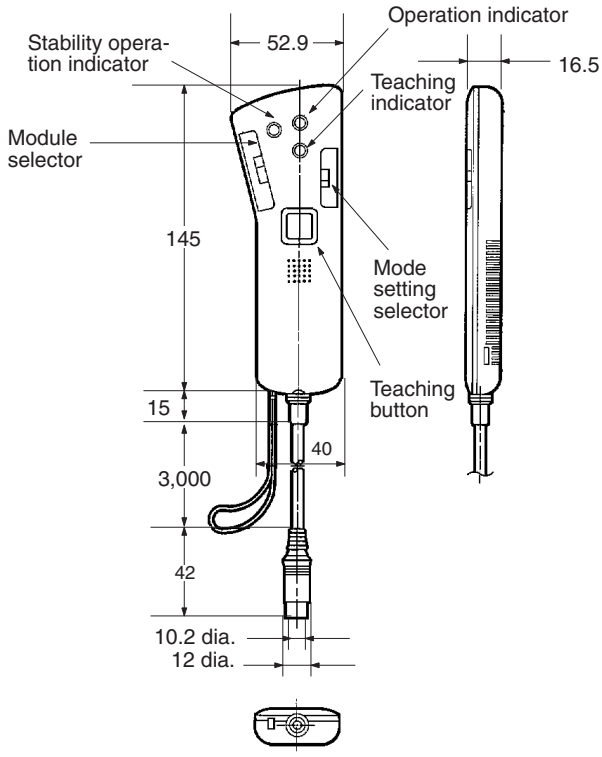

E3X-MA11 Optical Fiber Photoelectric Module

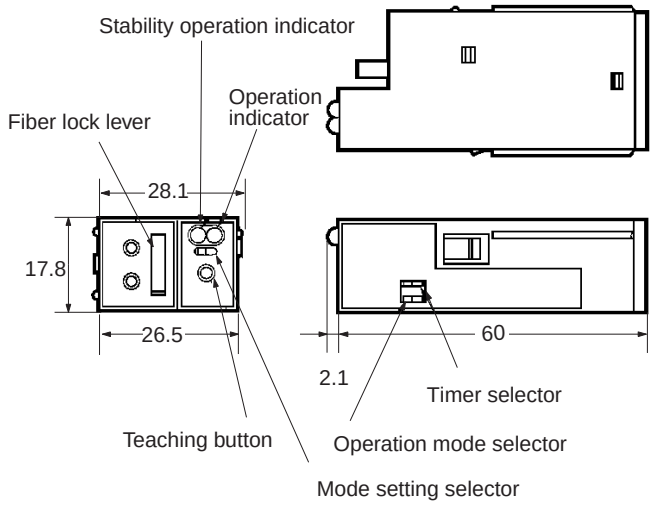

E3C-MA11 Photoelectric Module

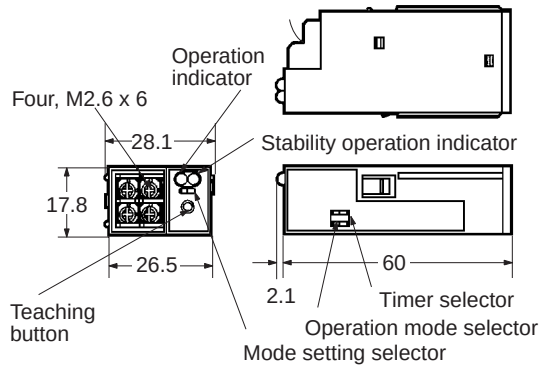

E2C-MA11 Proximity Sensor Module

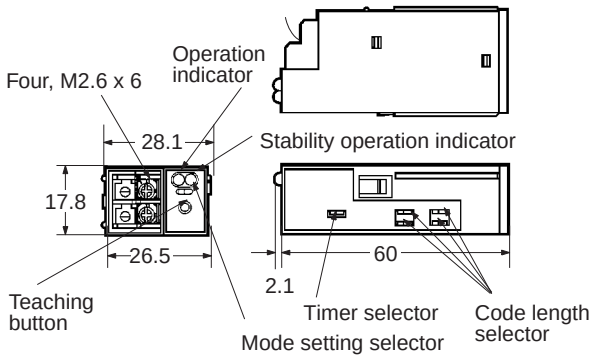

Sensor Specifications

The following table lists combinations of typical sensors that can be used in combination with each sensor module.

E3X-MA11

Item	Sensing method	Thru-beam model			Side view thru-beam model	Heat-resistive thru-beam model	Screen thru-beam model
	Feature	Long sensing distance	Standard sensing distance	Flexible cable	Long sensing distance	Resisting 150°C	Sensing a width of 10 mm
	Model	E32-T11L	E32-TC200	E32-T11	E32-T14L	E32-T51	E32-T16
Sensing distance (standard sensing object)		500 mm (1,200 mm) (see note 1) (1.4 dia. mm min. non-trans-parent object)	270 mm (2,000 mm) (see note 1) (1 dia. mm min. non-transparent object)	240 mm (1,300 mm) (see note 1) (1 dia. mm min. non-transparent object)	130 mm (1 dia. mm min. non-transpar-ent object)	300 mm (1.5 dia. mm min. non-trans-parent object)	1,000 mm (see note 2) (view: 10 mm wide) (10 dia. mm min. non-transparent object)
Minimum sensing object (non-trans-parent object)		0.2 dia. mm			0.3 dia. mm	0.4 dia. mm	0.2 dia. mm (see note 2)
Ambient operating temperature		–40° to 70°C with no icing				–40° to 150°C with no icing (see note 3)	–40° to 70°C with no icing
Ambient operating humidity		35% to 85%					
Permissible bending radius		25 mm min.		4 mm min.	25 mm min.	35 mm min.	25 mm min.
Cable covering		Black polyethylene		Vinyl chloride	Black polyeth-ylene	Fluorocarbon resin	Black polyeth-ylene
Enclosure rating		IEC IP67					

Note 1. Values in parentheses are possible if the E39-F1 Lens Unit is used.

2. The sensing distances of the E32T16 with slits are as follows:
0.5-mm wide slit: 450 mm with a minimum sensing object size of 0.2 mm dia.; 1.0-mm slit: 800 mm with a minimum sensing object size of 0.3 mm dia.

3. The E32-T51 can be used continuously within a temperature range of –40° to 130°C.

Item	Sensing method	Reflective model			Side view reflective model	Heat-resistive reflective model	Retroreflec-tive model
	Feature	**Long sensing distance**	**Standard sensing distance**	**Flexible cable**	**Long sensing distance**	**Resisting 150°C**	**Sensing a transparent object**
	Model	**E32-D11L**	**E32-DC200**	**E32-D11**	**E32-D14L**	**E32-D51**	**E32-R21 and E39-R3**
Sensing distance (standard sensing object)	White paper	150 mm (20 × 20 cm)	100 mm (10 × 10 cm)	60 mm (10 × 10 cm)	40 mm (5 × 5 cm)	60 mm (10 × 10 cm)	25 to 250 mm (35 dia. mm min. non-transparent object)
	Black paper	50 mm (20 × 20 cm)	20 mm (10 × 10 cm)	15 mm (10 × 10 cm)	8 mm (5 × 5 cm)	12 mm (10 × 10 cm)	---
Minimum sensing object (pure copper wire)		0.015 dia. mm			0.03 dia. mm		0.6 dia. mm
Differential distance		20% max. of the sensing distance					
Ambient operating temperature		–40° to 70°C with no icing				–40° to 150°C with no icing (see note)	–40° to 70°C with no icing
Ambient operating humidity		35% to 85%					
Permissible bending radius		25 mm min.		4 mm min.	25 mm min.	35 mm min.	25 mm min.
Cable covering		Black polyethylene		vinyl chloride	Black polyeth-ylene	Fluorocarbon resin	Black polyeth-ylene
Enclosure rating		IEC IP67					IEC IP67

Note The E32-D51 can be used continuously within a temperature range of –40° to 130°C.

E3C-MA11

Item		Thru-beam model			Diffuse reflective model	Limited reflective model	
		E3C-S10	**E3C-1**	**E3C-2**	**E3C-DS5W**	**E3C-DS10**	**E3C-LS3R**
Sensing distance		10 cm	1 m	2 m	5 cm	10 cm	3 ± 0.3 cm
Minimum sensing object		2-mm non-transparent object	4-mm non-transparent object	8-mm non-transparent object	---		
Standard sensing object		---			10 × 10 cm white paper	5 × 5 cm white paper	1 × 1 cm white paper
Directional angle		10° to 60°	3° to 20°	3° to 15°	---		
Differential distance		---			20% max.	10% max.	±3% max.
Ambient operating illumination	Incandescent lamp	3,000 lux max. on the surface of each sensing object					1,000 lux max.
	Sunlight	10,000 lux max. on the surface of each sensing object					3,000 lux max.
Ambient operating temperature		–25° to 70°C with no icing					
Ambient operating humidity		35% to 85%					
Vibration resistance		10 to 55 Hz, 1.5-mm double amplitude in X, Y, and Z directions for 2 hours each			10 to 500 Hz, 1.5-mm double amplitude in X, Y, and Z directions for 2 hours each	10 to 55 Hz, 1.5-mm double amplitude in X, Y, and Z directions for 2 hours each	
Shock resistance		500 m/s^2 3 times each in X, Y, and Z directions					
Enclosure rating		IEC IP64 (drip proof)	IEC IP66 (water resistive)		IEC IP50	IEC IP64 (drip proof)	

Item		Reflective model for mark detection			
		E3C-VS1G	**E3C-VS3R**	**E3C-VM35R**	**E3C-VS7R**
Sensing distance		1 ± 0.2 cm	3 ± 0.5 cm	3.5 ± 0.5 cm	7 ± 1.0 cm
Minimum sensing mark (black mark on white paper)		0.9 mm at the center of the sensing distance	1.6 mm at the center of the sensing distance	0.2 mm at the center of the sensing distance	0.6 mm at the center of the sensing distance
Ambient operating illumination	Incandescent lamp	1,000 lux max. on the surface of each sensing object.			
	Sunlight	3,000 lux max. on the surface of each sensing object			
Ambient operating temperature		–10° to 70°C with no icing		–25° to 70°C with no icing	–10° to 70°C with no icing
Ambient operating humidity		35% to 85%			
Vibration resistance		10 to 55 Hz, 1.5-mm double amplitude in X, Y, and Z directions for 2 hours each			
Shock resistance		500 m/s^2			
Enclosure rating		IEC IP64 (drip proof)		IEC IP50 (drip proof)	

Model	Suggested cable	Substitute cable
Thru-beam model E3C-S10 E3C-1 E3C-2	Shielded round cable with polyethylene insulation 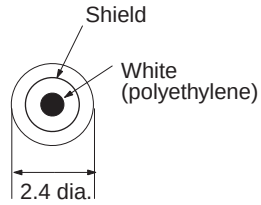 12-strand wire/0.18 dia.	A single shielded cable, with vinyl insulation, and conductor with a cross section of 0.3 mm^2 min. 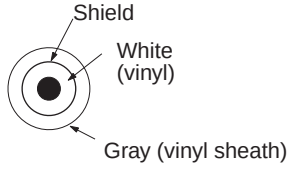
Reflective model E3C-DS10 E3C-VS1G E3C-VS3R E3C-LS3R	Shielded parallel cable with vinyl insulation 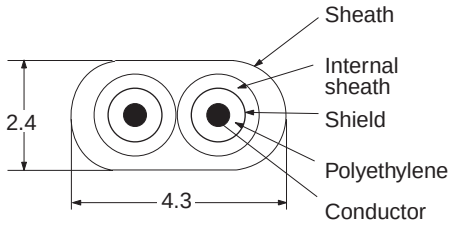 12-strand wire/0.18 dia.	If the shielded parallel cable with vinyl insulation is not available, use two single-conductor shielded vinyl cables.
Reflective model E3C-DS5W E3C-VS7R E3C-VM35R	Shielded parallel cable with vinyl insulation 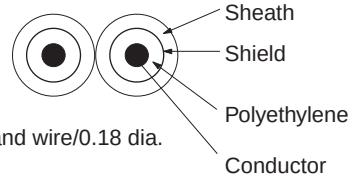 7-strand wire/0.18 dia.	If the shielded parallel cable with vinyl insulation is not available, use two single-conductor shielded vinyl cables.

E2C-MA11

The following table gives the characteristics for Sensors combined with the Module. Other E2C-series sensors cannot be connected to the Module.

Item		Model			
		E2C-CR5B	**E2C-CR8A** **E2C-CR8B**	**E2C-X1A** **E2C-C1A**	**E2C-X1R5A**
Sensing object		Magnetic metal			
Standard reference object		Iron: 5 × 5 × 1 mm			Iron: 8 × 8 × 1 mm
Stable sensing range (over rated temperature range)		0 to 0.5 mm	0 to 0.8 mm	0 to 1 mm	0 to 1.5 mm
Stable sensing range (0 to 40°C)		0 to 0.7 mm	0 to 1.2 mm	0 to 1.5 mm	0 to 2 mm
Response frequency (see note 1)		1 kHz			800 Hz
Ambient operating temperature		–10 to 55°C	–25 to 70°C (no icing)		
Ambient operating humidity		35% to 95%			
Temperature influence		±25% max. of sensing distance between –10 and 55°C (tested at 23°C)	±15% max. of sensing distance between –25 and 70°C (tested at 23°C)		
Vibration resistance		Destruction: 10 to 55 Hz, 1.5-mm double amplitude for 2 hrs each in X and Y directions			
Shock resistance		Destruction: 500 m/s^2 3 times each in X and Y directions			
Enclosure rating		IEC IP64	IEC IP67		
Cable length (see note 2)		3 m shielded cable	3 m (standard) high-frequency coaxial cable; max. length: 5 m		
Weight (with 3-m cable)		10 g approx.	40 g approx.	45 g approx.	50 g approx.
Materials	Case	Stainless steel		Bronze	
	Sensing surface	ABS resin			
Cable		Polyethylene			

Note 1. Measurement conditions: Standard reference object, sensing objects spaced at twice the width of the standard reference object, sensing distance set at half of maximum distance.

2. Characteristic impedance of high-frequency coaxial cable: 50 Ω.

PART VII
Linear Sensor Interface Units

CQM1-LSE01

CQM1-LSE02

SECTION 1
Features and System Configuration

This section provides the features and system configuration relating to the Linear Sensor Interface Unit.

1-1 Features 178
1-2 System Configuration 179

1-1 Features

- When the Linear Sensor Interface Unit is used in a system, linear sensor input signals received by the Unit are converted into appropriate numeric values according to preset scaling values.
- The Linear Sensor Interface Unit compares the scaled conversion data with the four comparison set values (HH, H, L, and LL), ensuring the ease of object discrimination.
- The four timing hold modes that are synchronized with the external signal input allow free setting of the input data sampling point and easy retrieval or control of desired data.
- The CQM1-LSE02 can convert input data into voltage output, which can be used as data for external monitoring.
- The teaching function enables the Linear Sensor Interface Unit to use actual input as scaling and comparison set values, thus ensuring the easy adjustment.
- The zero point (measurement standard point) can be forced, which allows relative object measurement.
- A ladder program can be used to enable the CQM1-LSE02 to have voltage output. The ladder program used with the CQM1-LSE02 enables the output voltage to correspond to the data.
- The Programming Console can be used to easily set the Linear Sensor Interface Unit to its initial values.

Linear Sensor Interface Units

Model	Type
CQM1-LSE01	Standard
CQM1-LSE02	With monitor output

1-2 System Configuration

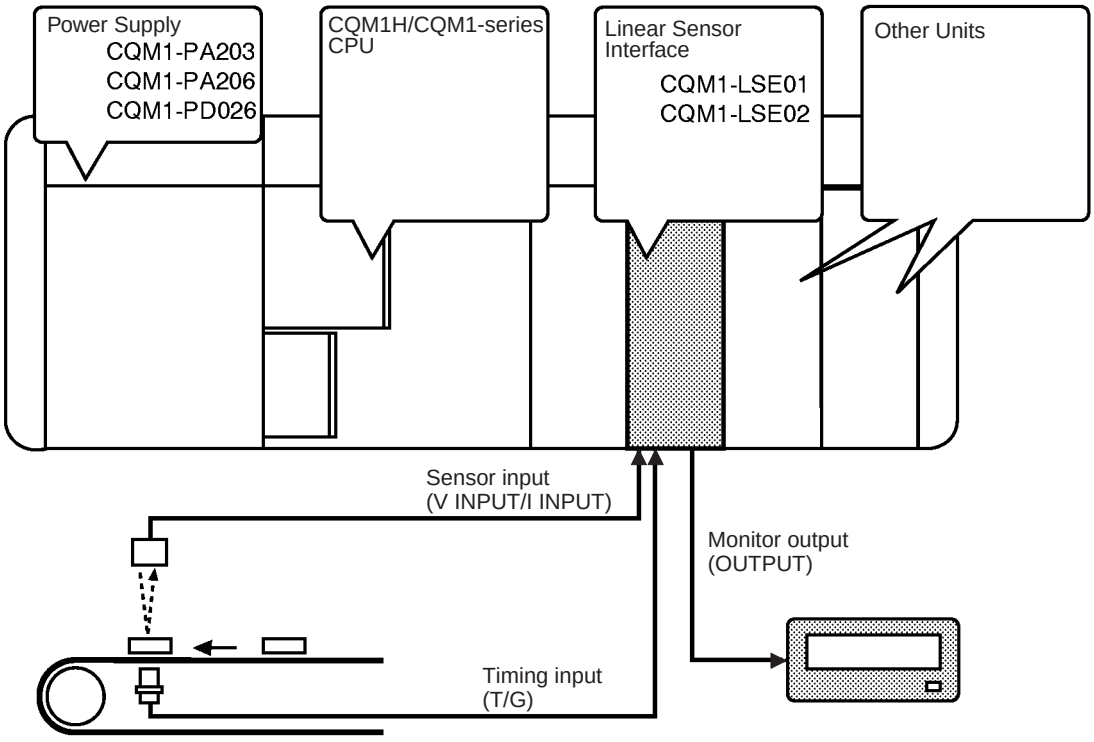

- Use the Programming Console to write its initial values to the Unit.
- The Unit needs zero input and zero reset input for forced zero.
- The CQM1-LSE01 does not have monitor output.

Word Number

The word allocations for a CQM1H/CQM1-series Dedicated I/O Unit are as follows.

Input: 001 to 015
Output: 100 to 115

The Unit uses a single input word and single output word. The CQM1-LSE01, which is not provided with the monitor output function, also uses a single output word.

Words are allocated in left-to-right order to the CQM1H/CQM1-series Dedicated I/O Units mounted to the PC. For example, if an Input Unit that occupies one word, an Output Unit that occupies two words, and the CQM1-LSE01/LSE02 are mounted to the PC and if the Input Unit and Output Unit are located to the left of the CQM1-LSE01/LSE02, the input and output word numbers of the CQM1-LSE01/LSE02 will be 002 and 102 respectively.

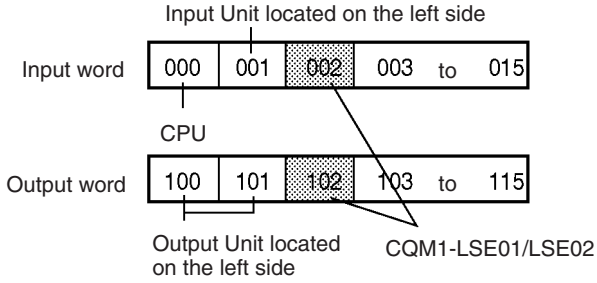

SECTION 2
Functions

This section provides an explanation of the scaling, timing hold, data input, teaching, forced zero, and monitor output functions.

2-1 Scaling 182
2-2 Timing Hold 183
2-3 Scaled Conversion Data/Comparison Result 186
2-4 Teaching 187
2-5 Forced Zero (Zero-shift) 188
2-6 Voltage Monitor Output 188

2-1 Scaling

The conversion of input voltage or current in a certain range to a value in a certain range is called scaling. For example, if the user converts input voltage or current so to be displayed as a percentage, the converted value will be displayed in the range 0 through 100. The following is the scaling method.

The following graph shows the relationship between input to the Unit and the values converted from the input. In this graph, Y1 is converted data corresponding to input data X1 and Y2 is a converted data corresponding to input data X2.

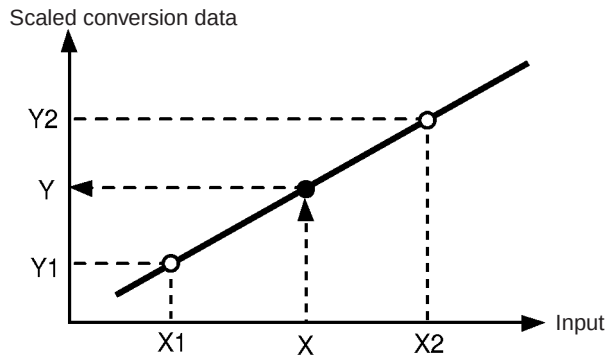

As shown in the above graph, it is possible to obtain scaled conversion data (Y) corresponding to input data (X).

Example for Measuring Lengths Using a Sensor with an Input of 4 to 20 mA

If the output of the sensor is 4 mA when the length of the object sensed by the sensor is 10 centimeters and the output of the sensor is 15 mA when the length of the object is 30 centimeters, the following data should be input.

X1 = 400, X2 = 1500, Y1 = 1000, Y2 = 3000

If the input from the sensor is 10 mA, a value corresponding to the input will be 2091 (i.e., 20.91 centimeters) in this case.

X1 can be larger or smaller than X2. Therefore, Y1 can be larger or smaller than Y2.

Reference

When scaling is conducted, the scaled conversion data may exceed the range between 9999 and –9999 even if the input values are within the permissible range. The scaled conversion data that fall outside the permissible measurement range are treated as overflow values. The input values that fall outside the permissible range (over-range) are also treated as overflow values.

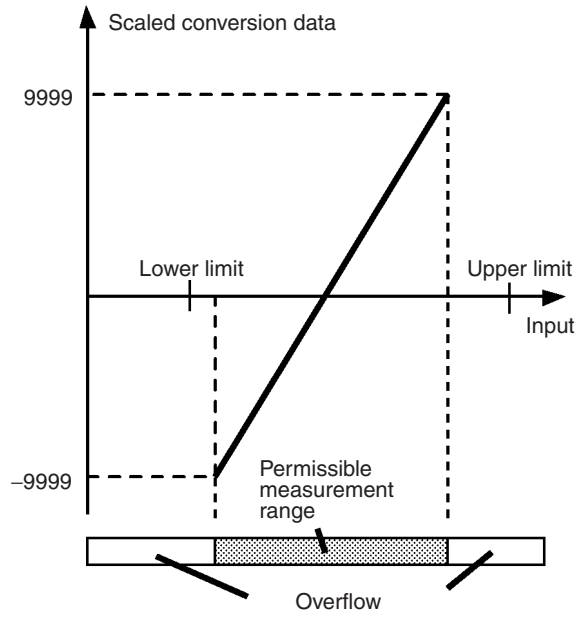

2-2 Timing Hold

The Unit takes samplings of input values that are input from the linear sensor, computes them, and then holds the computed values. Any of the following timing hold types can be selected for the Unit.

- Normal
- Sampling hold
- Maximum hold
- Minimum hold
- Peak-to-peak hold

Normal

If the timing hold is set to normal, the TIMING input is not effective, and the Unit continues sampling. The reset input is not effective.

Sampling Hold

If the timing hold is set to sampling hold, the Unit samples the data at the rising edge of the timing input to the Unit when the TIMING input is turned ON.

The Unit stops data sampling during the following periods. The data is “BBBB.”

[1] From the moment the Unit is turned ON until the first TIMING input is turned ON.

[2] From the moment the reset input is turned ON until the TIMING input is turned ON for the first time after the reset input is turned OFF.

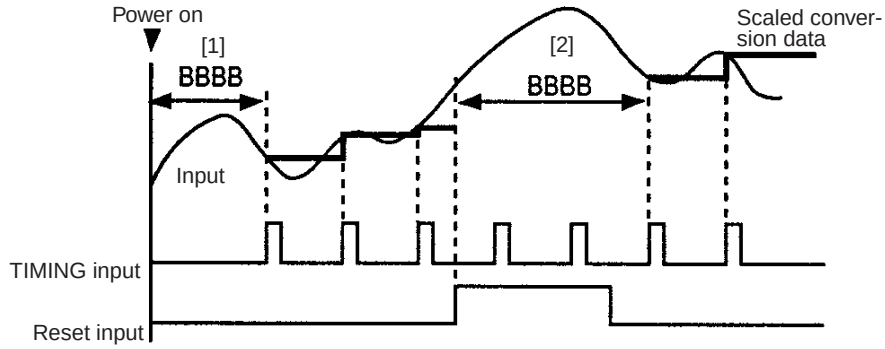

Maximum Hold

If the timing hold mode is set to maximum hold, the Unit continues data sampling while the TIMING input is ON.

- When the TIMING input is turned OFF and the measurement mode is selected using the data input function, the maximum value of the input data sampled between the leading and trailing edge of the timing input is stored in the input word as the scaled conversion data.
- When the TIMING input is turned OFF and the comparison mode is selected using the data input function, the comparison result flags of the input word are turned ON or OFF according to the comparison result processed by the Unit.

The Unit stops data sampling during the following periods, The scaled conversion data is “BBBB.”

[1] From the moment the Unit is turned ON until the first timing input is turned ON and OFF.

[2] From the moment the reset input is turned ON until the timing input is ON and OFF for the first time after the reset input is turned OFF.

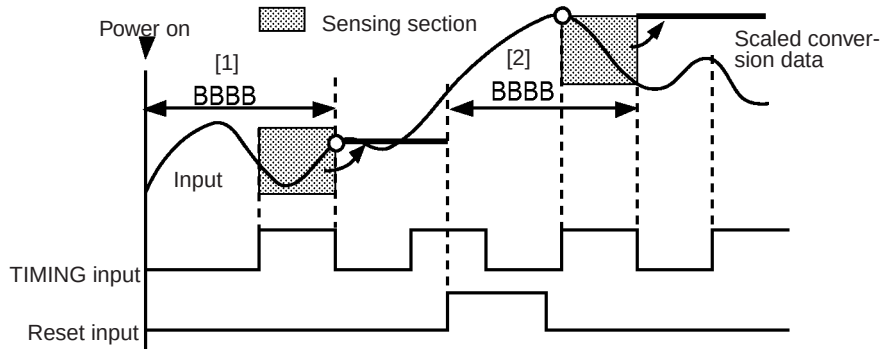

Minimum Hold

If the timing hold mode is set to minimum hold, the Unit continues data sampling while the TIMING input is ON.

- When the TIMING input is turned OFF and the measurement mode is selected using the data input function, the minimum value of the input data sampled between the leading and trailing edge of the timing input is stored in the input word as the scaled conversion data.
- When the TIMING input is turned OFF and the comparison mode is selected using the data input function, the comparison result flags of the input word are turned ON or OFF according to the comparison result processed by the Unit.

The Unit stops data sampling during the following periods, The scaled conversion data is “BBBB.”

[1] From the moment the Unit is turned ON until the first timing input is turned ON and OFF.

[2] From the moment the reset input is turned ON until the timing input is ON and OFF for the first time after the reset input is turned OFF.

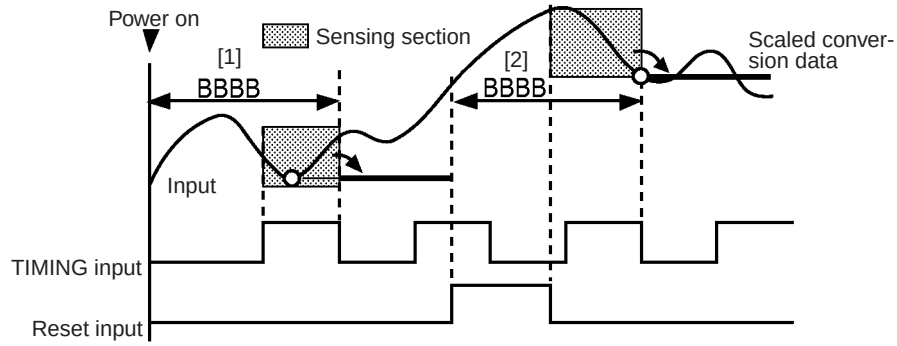

Peak-to-peak Hold

If the timing hold mode is set to peak-to-peak hold, the Unit continues data sampling while the TIMING input is ON.

- When the TIMING input is turned OFF and the measurement mode is selected using the data input function, the difference between the maximum value and minimum value of the input data sampled between the leading and trailing edge of the timing input is stored in the input word as the scaled conversion data.
- When the TIMING input is turned OFF and the comparison mode is selected using the data input function, the comparison result flags of the input word are turned ON or OFF according to the comparison result processed by the Unit.

The Unit stops data sampling during the following periods, The scaled conversion data is “BBBB.”

[1] From the moment the Unit is turned ON until the first timing input is turned ON and OFF.

[2] From the moment the reset input is turned ON until the timing input is ON and OFF for the first time after the reset input is turned OFF.

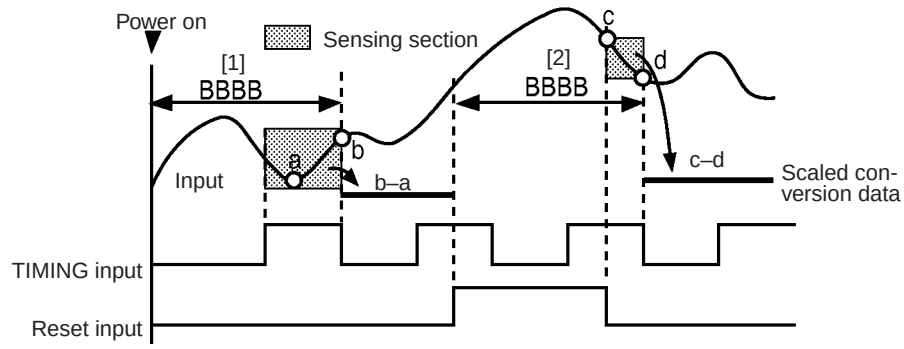

Available Commands and Functions

Function (Command code)	Timing Hold				
	Normal	Sampling Hold	Maximum Hold	Minimum Hold	Peak-to-peak Hold
Scaling Value Teach (C5*0)	Yes	Command Error (Word status: E003)			
Set Value Teach (C8*0)	Yes				
Present Value Read: BCD (CC00)	Yes				

Function (Command code)	Timing Hold				
	Normal	Sampling Hold	Maximum Hold	Minimum Hold	Peak-to-peak Hold
Forced-zero Shift (ZERO external control input)	Yes	Yes	Yes	Yes	Zero input will be ignored.
Hysteresis Set (CA00) Hysteresis Read (CB00)	Yes	Commands are received, but the hysteresis function is invalid.			

2-3 Scaled Conversion Data/Comparison Result

Either of the following is stored in the input word.

- Scaled conversion data
- Result of comparison between the set value and the scaled conversion data

Scaled Conversion Data

The binary-coded scaled conversion data is stored in the input word allocated to the Unit.

Comparison Results

The comparison result of the value is obtained by comparing the preset HH, H, L, and LL comparison set values and the scaled conversion data. The following bits will be turned ON according to the result.

- HH: The HH bit of the input word will be ON if the present scaled conversion data equals or is greater than the HH set value.
- H: The H bit of the input word will be ON if the present scaled conversion data equals or is greater than the H set value.
- L: The L bit of the input word will be ON if the present scaled conversion data equals or is less than the L set value.
- LL: The LL bit of the input word will be ON if the present scaled conversion data equals or is less than the LL set value.

The PASS bit of the input word will be ON in other cases.

If the Unit is in normal hold mode, the hysteresis of the present scaled conversion data will be effective when any of the above bits is turned OFF.

The following is an example of data comparison. The timing hold is set to normal.

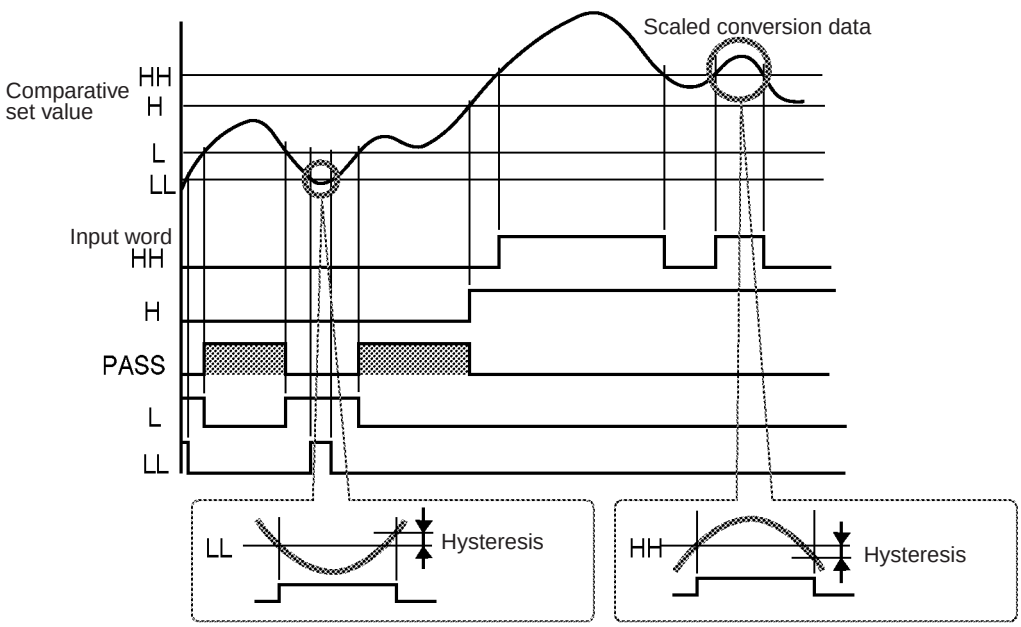

2-4 Teaching

The teaching function is can be set only when the timing hold in operation mode A is set to normal.

The Programming Console makes it possible to adjust the scaling and set values preset on the Unit using objects.

Scaling Value Teach

When the scaling value teach command is executed, the actual input value can be set as the X1 or X2.

This allows an easy adjustment of the input error.

For example, when setting the X1 value as an input value of the smallest object, execute a scaling command while the smallest object is being sampled. In the same manner, the X2 value can be set as the largest object input value if the scaling command is executed while the largest object is being sampled.

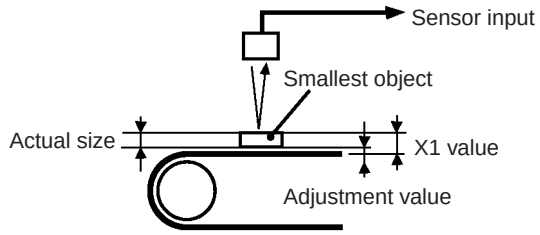

Set Value Teaching

By using the set value teach command, an actual input value can be set as the HH, H, L, or LL set value. It is useful for making judgments on whether products are acceptable or defective.

For example, when setting the lowest set value LL, execute the set value teach command while the smallest object is being measured. If the same command is executed while the largest object is being measured, the highest set value HH can be set.

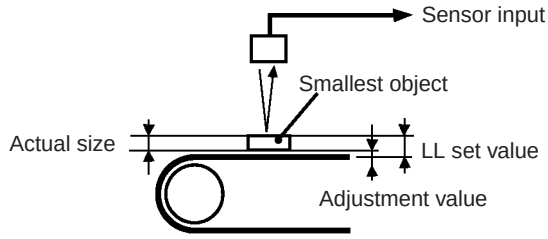

2-5 Forced Zero (Zero-shift)

The forced zero function enables the Unit to shift the scaled conversion data to 0 to calibrate, which allows relative object measurement with ease.

The forced zero state stays in effect until ZERO RESET input signal to the Unit is turned ON.

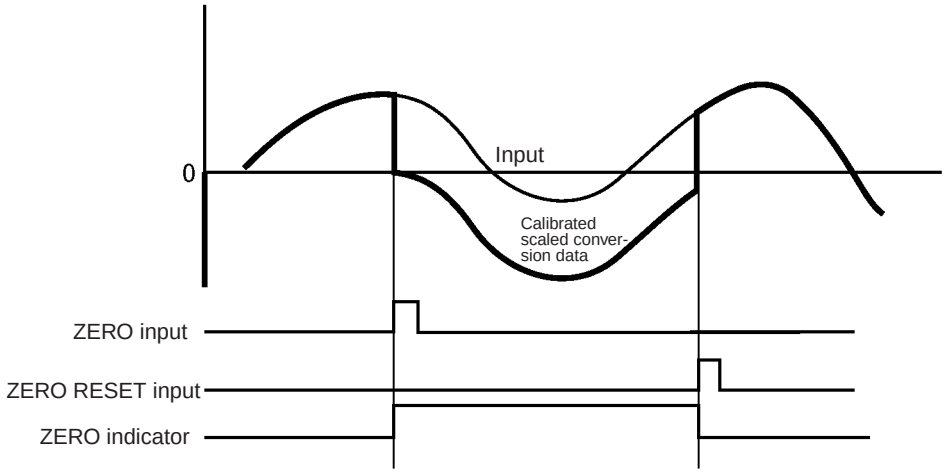

When zero input is turned ON while the Unit is sampling data, the scaled conversion data will be shifted to zero and stored as binary data in the input word, or the comparison result flags of the input word are turned ON or OFF according to the comparison result processed by the Unit.

The nonvolatile memory can store the zero shift value.

While the forced-zero state stays in effect, the ZERO indicator is lit.

Note The forced zero function is not effective when the timing hold mode is set to peak-to-peak hold.

2-6 Voltage Monitor Output

The CQM1-LSE02 has a voltage monitor output function.

Scaled conversion data monitor mode or set data D/A output mode can be selected.

The Unit refreshes its monitor output at 0.5-s intervals.

Scaled Conversion Data Monitor Mode

In this mode, it is possible to output voltage corresponding to the scaled conversion data.

Example of Scaling into the Data between 0000 to 5000 for the Input between 4 to 20 mA

When the input is 12 mA, the scaled conversion data becomes 2500 and the output voltage that corresponds to this value becomes 2.5 V.

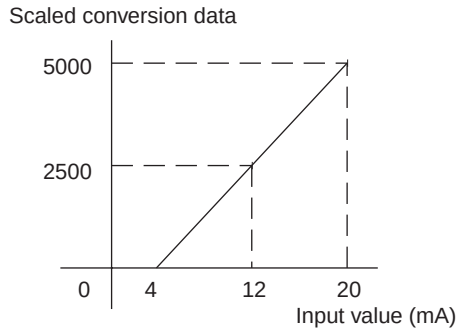

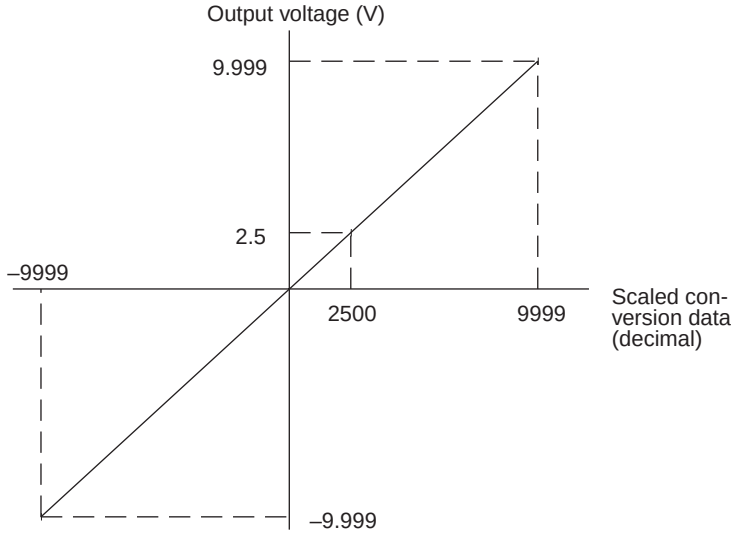

Set Data D/A Output Mode

In this mode, the monitor output terminal of the CQM1-LSE02 will have voltage output corresponding to the signed binary data stored in the output word of the CQM1-LSE02 by easy use of the ladder program.

The signed binary data range of the CQM1-LSE02 is from –9999 (D8F1) to 9999 (270F) and the voltage output range of the CQM1-LSE02 corresponding to the signed binary data range is from –9.999 to 9.999 V.

If the signed binary data out of the range is stored in the output word, either –9.999 or 9.999 V will be output. For example, if the signed binary data D8F0 (–10000 in BCD) is written, the voltage of the monitor output will be –9.999 V.

Note In case of using the Unit in the set data D/A output mode, when obtaining the value to be set to the output word through calculation using the ladder program, etc., be careful not to use the computed result of “C000 to CFFF.” Even when the Unit is used in the set data D/A output mode, if “C000 to CFFF” is set to the output word, it is treated as a command.

In this mode, analog input is converted into digital data and then converted into analog output. Therefore, the obtained analog output is not highly precise.

SECTION 3
Nomenclature and Functions

This section provides the nomenclature, and terminal and indicator functions of the Linear Sensor Interface Unit.

3-1 Nomenclature 192
3-2 Terminals. 193

3-1 Nomenclature

Front View

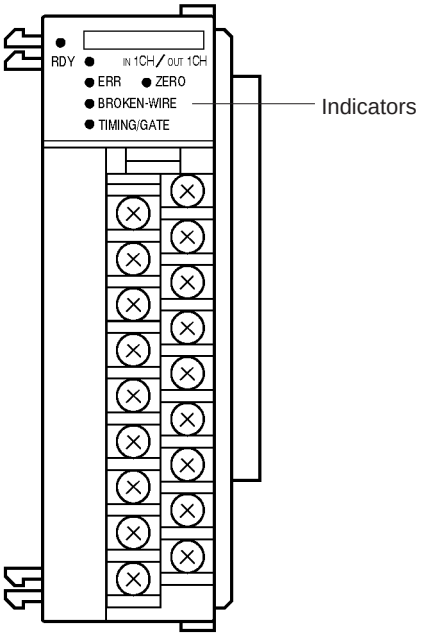

Indicators

Name	Color	Function
RDY	Green	Lit when the Linear Sensor Interface Unit is ready for use.
ERR	Red	Lit when an internal error, such as IC malfunctioning, occurs.
BROKEN-WIRE	Red	Lit when 1- to 5-V or 4- to 20-mA input to the Unit is disconnected. This indicator cannot be used to detect the disconnection of ±9.999- or ±5-V input.
TIMING/GATE	Orange	Lit when TIMING or GATE input to the Unit is ON.
ZERO	Orange	Lit when the forced zero function is effective.

Side View

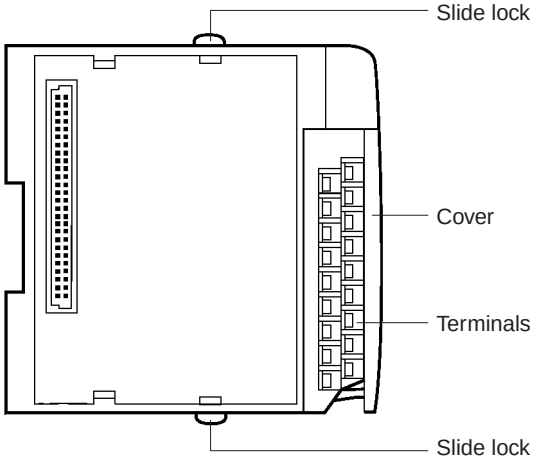

3-2 Terminals

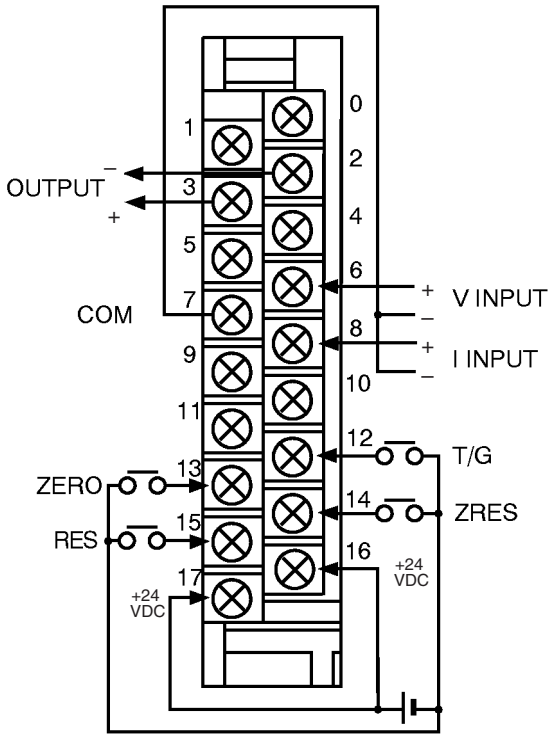

V INPUT Connect a linear sensor with voltage output to this terminal. The available voltage ranges of the V INPUT terminal are from –9.999 to 9.999, from –5 to 5, and from 1 to 5 V.

I INPUT Connect a linear sensor with a current output range from 4 to 20 mA to this terminal.

COM Common terminal for the V INPUT and I INPUT terminals.

OUTPUT Monitor output terminal for the CQM1-LSE02.

T/G Timing input terminal. If the timing hold is set to sampling hold, the Unit will be in data sampling operation at the moment timing input is turned ON. If the timing hold is set to maximum hold, minimum hold, or peak-to-peak hold, the Unit will be in data sampling operation while timing input is ON. This terminal is not used by if the timing hold is set to normal.

RES Reset input terminal. When reset input is turned ON, the Unit will no longer be in HOLD mode. This terminal is used if the Unit is set to any timing hold other than normal.

ZERO Zero input terminal. When zero input is turned ON, the Unit will forcibly shift the scaled conversion data to zero and the Unit will continue operating.

ZRES Zero reset terminal. The forced-zero state is canceled when zero reset input turned ON.

⚠ **Caution** Do not use the unused terminals for relaying signals.

SECTION 4
Connections

This section describes the connections of the Linear Sensor Interface Unit.

4-1 Mounting and Wiring 196

4-1 Mounting and Wiring

Mounting

Refer to the *CQM1H Operation Manual (W363) or the CQM1 Operation Manual (W226)* before mounting this Unit to the PC.

Wiring

Refer to *3-2 Terminals* for the wiring of the terminals.

⚠ **Caution**

- Make sure that the polarity of each input line connecting to the terminals is correct.
- It is possible that the terminal block may become disconnected from the Unit. After the terminals are wired, make sure that the terminal block is properly connected to the Unit.

Connection Terminals

Connect each input line to the terminal using a solderless terminal.

Do not tighten any screw of the terminals to a torque exceeding 0.5 N • m.

Use either of the following types of M3 solderless terminals for the input lines connecting to the terminals.

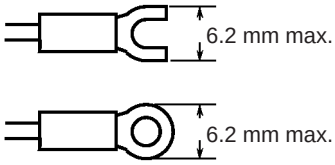

Crimp Connectors

Crimp connectors for wiring should be less than 6.2 mm wide (M3), and the wire should be AWG22 to 18 (0.25 to 1.65 mm^2).

SECTION 5
Basic Operation

This section describes the basic operation of the Linear Sensor Interface Unit using the Programming Console.

5-1 Operating Method 198
5-2 Programming Console Operation 199
5-3 Operation Mode 200
5-4 Scaling. 202
5-5 Comparison 205
5-6 Monitoring 207

5-1 Operating Method

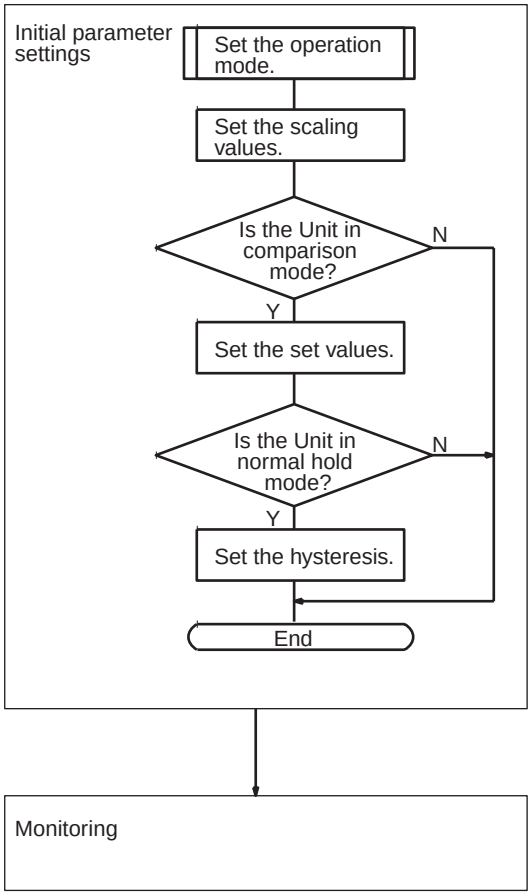

Initial Parameter Settings

Use the Programming Console to write the initial parameters to the output word of the Unit.

1,2,3...

1. Execute the operation mode A set command or operation mode B set command to determine the operation mode.
2. Determine the scaling values.
3. Determine the set values if the Unit is used in comparison mode.
4. Execute the operation mode A set command to determine the hysteresis if the timing hold type is set to normal.

Monitoring

Use a ladder program to retrieve the input word data for monitoring. The input word data is the scaled conversion data if the Unit is in measurement mode. The input word data is a comparison result if the Unit is in comparison mode.

Note The scaling values and zero shift value will be reset to the factory-set values. if the input type is changed with the operation mode A set command. Be sure to set the scaling values and zero shift value properly after the input type is changed with the operation mode A set command.
The command operation examples in the following section are described on the condition that the output word state before and after command operation be set to “0000.”
It must be noted that, if the Unit is used in the set data D/A output mode, the output is specified to be 0 V. Therefore, set a desired output value instead of “0000” in actual operation.

5-2 Programming Console Operation

Refer to the *CQM1H Operation Manual (W363) or the CQM1 Operation Manual (W226)* for the detailed operating method of the Programming Console.

The operation of the Programming Console required for the initial settings is explained below.

Initial Screen

Operate the Programming Console as described below so that the default screen of the Programming Console in program mode will appear.

1,2,3...

1. Connect the Programming Console to the CQM1H/CQM1 CPU, set the mode selector of the Programming Console to PROGRAM MODE, and supply power to the Programming Console.

```
<Program>
Password
```

2. Input the password.

CLR MONTR

```
<Program>
```

3. The default screen will appear.

CLR

```
00000
```

I/O Words

The contents of the I/O words will appear on the screen of the Programming Console. When measured mode is selected for data input, the present binary-coded scaled conversion data will appear under the input word display.

1,2,3...

1. The input word (word 001 in this example) will be displayed.

SHIFT CH/* A 0 A 0 B 1 MONTR

```
c001
0000
```

2. The output word (word 100 in this example) will be displayed.

Output word Input word

SHIFT CH/* B 1 A 0 A 0 MONTR

```
c100 c001
0000 0000
```

Command

The command codes can be set to output word. In this example, descriptions are given for the operation mode A.

1,2,3...

1. The command code is set to the output word. The response for the command will appear under the input word display.

C

CHG SHIFT C 2 A 0 A 0 A 0 WRITE

```
c100 c001
C000 C000
```

2. If any parameter is used, the contents of the output word will be replaced with the parameter. The response to the parameter will appear under the input word display.

5-3 Operation Mode

Settings

The operation mode is selected with the operation mode A set command or operation mode B set command.

The following four items can be selected for the Unit with the operation mode A set command.

- **Data Input**
  Measurement Mode or Comparison Mode:
  When the Unit is in measurement mode, the binary-coded scaled conversion data is stored in the input word allocated to the Unit. When the Unit is in comparison mode, the Comparison Result Flags of the input word allocated to the Unit are turned ON or OFF after comparing the set value and scaled conversion data. When any overrange or sensor disconnection is detected by the Unit, the Overrange or Sensor Disconnection Flag of the input word is turned ON. The measurement mode is the factory setting.
- **Timing Hold**
  Normal, Sampling Hold, Maximum Hold, Minimum Hold, Peak-to-peak Hold:
  When setting the initial values, one of the five timing holds can be selected for the Unit. The timing hold is factory-set to normal.
- **Input Type**
  ±9.999 V, ±5 V, 1 to 5 V, or 4 to 20 mA:
  When setting the initial values, any input type among four input types can be selected for the Unit. The ±9.999 V input type is the factory setting.
- **Monitor Output (CQM1-LSE02 Only)**
  Scaled Conversion Data Monitor Mode or Set Data D/A Output Mode:
  The CQM1-LSE02 has a monitor output terminal, to which simple monitoring devices, such as the K3TE Digital Panel Meter, can be connected. In the scaled conversion data monitor mode, the Unit outputs the voltage corresponding to the scaled conversion data. In the set data D/A output mode, the monitor output terminal has voltage output corresponding to the data which is written to the output word allocated to the Unit. The scaled conversion data monitor mode is the factory setting.

It is possible to select any of the following three items for the Unit with the operation mode B set command.

- **Input Sampling Speed**
  Fast or Slow:
  The sampling time and period can be set to fast or slow according to the type of sensing object considering the relationship between the measuring accuracy and measuring speed. The sampling time/period is factory-set to slow.
- **Number of Averaging Process Times**
  1, 2, 4, 8, or 16:
  For more precise sampling, it is possible to take an average of a designated number of samples. The number is factory-set to 4.

- **Zero Shift Value Storage Area**
  RAM or Nonvolatile Memory:
  The Unit has a forced zero function that will become active with external signal input to the Unit. The RAM or nonvolatile memory can be selected to store the zero shift value. The RAM is factory-set to store the zero shift value.

Note The zero shift value stored in the RAM will be lost when the Unit is turned OFF. The RAM should be used to store the zero shift value if the forced zero function is frequently used. The zero shift value stored in the nonvolatile memory will not be lost when the Unit is turned OFF. The zero shift value stored in the nonvolatile memory may not be, however, used more than 100,000 times. Decide where to keep the zero shift value according to the application.

Command

Each operation mode set command consists of a command code and parameter. The following command codes are used for the operation mode A and operation mode B set commands.

- Operation Mode A:C000
- Operation Mode B:C200

Refer to pages 218 to 221 for the details of the parameters used for the Unit.

Setting Example

In this example, the following operation modes are selected for the Unit.

- Data Input: Comparison mode
- Timing Hold Mode: Normal
- Input Type: 4 to 20 mA
- Monitor Output: Scaled conversion data monitor mode
- Input Sampling Speed: Fast
- No. of Averaging Process Times: 1
- Zero Shift Value Storage Area: RAM

In this example, the initial parameters have been set. Described below is the method of changing the data input and input type using the operation mode A set command.

Operation

1,2,3...

1. The input word reads 1254, which is the present scaled conversion data, and the output word reads 0000.

Output word Input word

```
c100  c001
0000  1254
```

2. Set the command code C1000 to the output word to in order to set the operation mode A. To input the letter C with the Programming Console, press the Shift and 2 Keys.
   The input word will be set to the response C000.

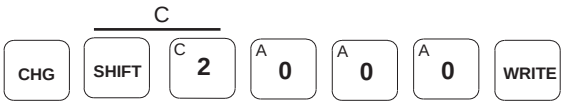


```
c100  c001
C000  C000
```

3. Set 2040 to the output word. The Unit will be in comparison mode and the available input range will be from 4 to 20 mA. All the other modes will remain unchanged.

4. When the Unit correctly receives the command, the input word will be set to 2040.
5. Reset 0000 to the output word.
6. The Comparison Result Flags of the input word is turned ON or OFF. In this example, the input word is set to 0004 (PASS).

5-4 Scaling

The setting method of the scaling values is explained below. Refer to *6-1 Scaling Value Teaching* for the method to obtain the scaling values from the teaching operation.

Settings

Scales input values into desired values within a range from –9999 to 9999. X2 – Y2 and X1 – Y1 must be input (X: input value, Y: corresponding display data). The X1 value must be different from the X2 value, otherwise the Unit will process them as an overrange value of B000.

Default Values

The following are the factory-set scaling values.

X1: 0
X2: 1000
Y1: 0
Y2: 1000

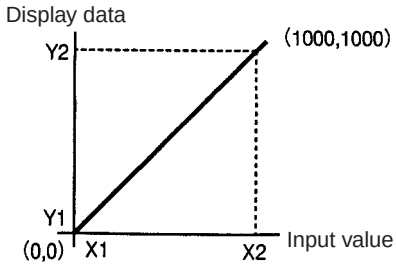

Therefore, if the Unit is operated with the factory-set scaling values with an input range from 4 to 20 mA, an input of 4 mA will be regarded as 400 and an input of 20 mA will be regarded as 2000. When the input type is “1 to 5 V,” an input of 1 V will be 1000 and that of 5V will be 5000. When the input type is “–9999 to 9999 V,” an input of 9,999 V will be 9999 and that of –9999 V will be –9999.

The graph below shows the relationship between the actual input values and the internal data.

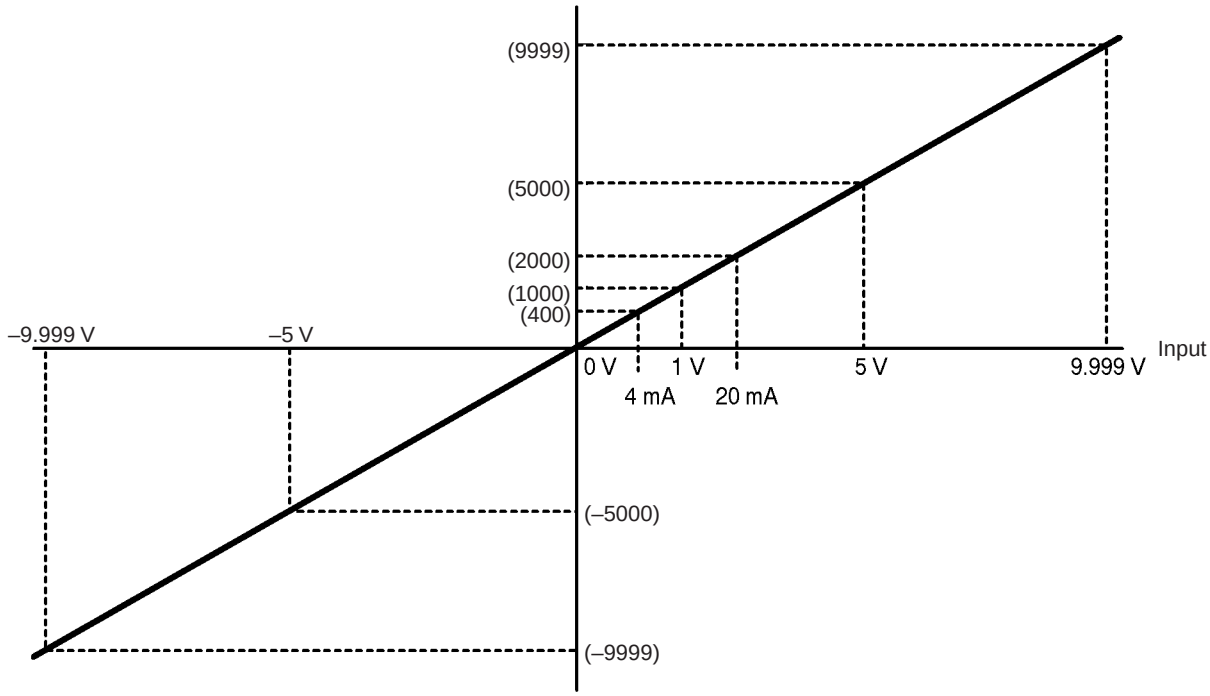

Command

The scaling value set command consists of a command code and parameter. The following command codes are used to set the X1, X2, Y1, and Y2 scaling values.

- X1 Scaling Value Set: C40□
- X2 Scaling Value Set: C41□
- Y1 Scaling Value Set: C42□
- Y2 Scaling Value Set: C43□

Each of the above scaling values has the suffix □, which should be replaced with 0 if the value is positive and F if the value is negative when they are input. The parameter range of each of the above scaling values is 0000 to 9999.

Refer to page 222 for the details of the scaling value set command.

Setting Example

In this example, the following scaling values are selected for the Unit.

X1: 400
X2: 2000
Y1: 0000
Y2: 1000

This means an input of 4 to 20 mA is scaled to binary data of “0 to 1000” and then converted into percentage data to the first decimal place.

In this example, the factory-set operation mode and scaling values have been set.

Operation

1,2,3...

1. The input word reads 1254, which is the present scaled conversion data, and the output word reads 0000.

Output word	Input word
c100	c001
0000	1254

2. Set the command code C400 for the X1 value. To input the letter C with the Programming Console, press the Shift and 2 Keys. The input word will be set to the response C400.

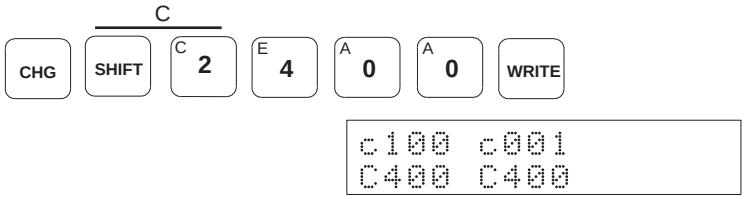

3. Set 0400 to the output word.
4. When the Unit correctly receives the command, the input word will be set to 0400.

5. Input the command code C410 for the X2 value. The input word will be set to the response C410.

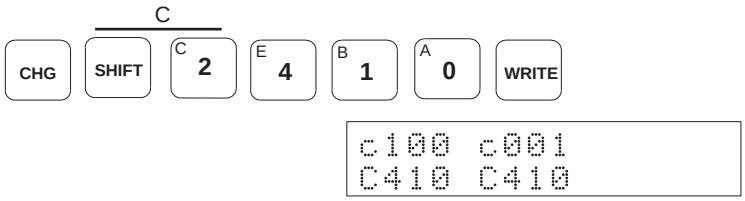

6. Set 2000 to the output word.
7. When the Unit correctly receives the command, the input word will be set to 2000.

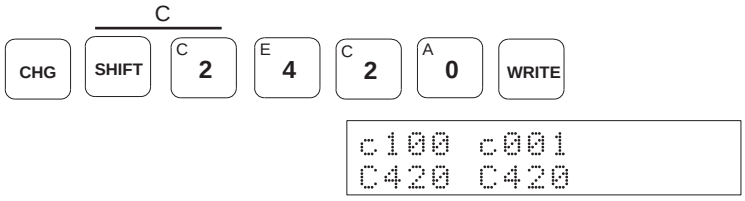

8. Set 0000 for the Y1 value and 1000 for the Y2 value using the above method.

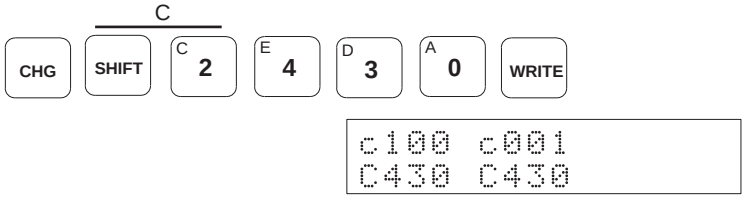

9. After setting all the scaling values, reset 0000 to the output word. After the scaling operation, 0534 will be set to the input word.

5-5 Comparison

The comparison function is effective only when the timing hold in operation mode A is set to normal.

The setting methods of the set values and hysteresis to compare the present scaled conversion data and the set values are explained below.

The preset set values and hysteresis are effective only when the Unit is set to comparison mode. The hysteresis is, however, available only if the timing hold is set to normal. Use the operation mode A set command to change the timing hold.

Refer to *6-2 Set Value Teaching* for the method to obtain the set values from the teaching operation.

Settings

Set the LL, L, H, and HH set values so that these set values are within a range from –9999 to 9999. The following are the factory-set set values.

LL and L: –9999
H and HH: 9999

Therefore, if the Unit is operated with the factory-set set values, the PASS bit of the input word will be always ON.

Set the hysteresis to a value between 0001 and 0999 for the LL, L, H, and HH set values. The factory-set value of the hysteresis is 0001.

Command

The set value set command consists of a command code and parameter. The following command codes are used for the LL, L, H, and HH set values.

- LL Set Value: C70□
- L Set Value: C71□
- H Set Value: C72□
- HH Set Value: C73□

Each of the above set values has the suffix □, which should be replaced with 0 if the value is positive and F if the value is negative when they are input. The parameter range of each of the above set values is 0000 to 9999.

The hysteresis set command consists of the command code CA00 and parameter. Set the hysteresis value to the parameter.

Refer to pages 224 to 226 for the details of the set value command.

Setting Example

Set the L set values to 0000 and the H set values to 2000 with the hysteresis set to 0010. Each Comparison Result Flag is turned ON when the scaled conversion data is as follows.

L ≤ 0000, PASS = 0001 to 1999, H ≥ 2000

Operation

1,2,3...

1. The input word reads 1254, which is the present scaled conversion data, and the output word reads 0000.

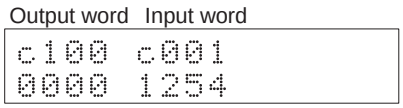

2. Input the set value set command code C710 for the L set value. To input the letter C with the Programming Console, press the Shift and 2 Keys.

   The input word will be set to the response C710.

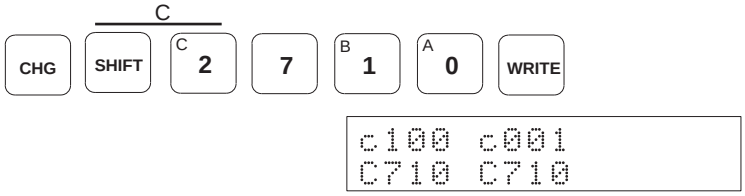

3. Set 0000 to the output word.
4. When the Unit correctly receives the command, the input word will be set to 0000.

5. Input the set value set command code C720 for the H set value. The input word will be set to the response C720.

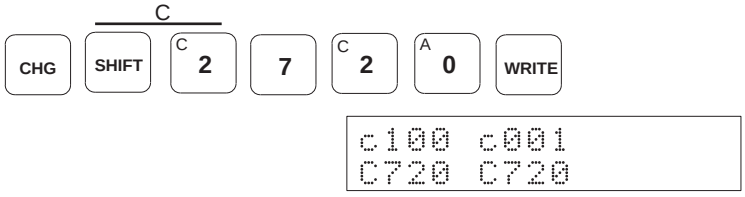

6. Set 2000 to the output word.
7. When the Unit correctly receives the command, the input word will be set to 2000.

8. Input the hysteresis set command code CA00.

   The input word will be set to the response CA00.

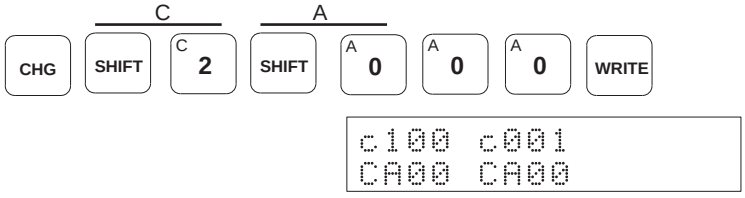

9. Set 0010 to the output word.
10. When the Unit correctly receives the command, the input word will be set to 0010.

11. After setting all the set values, set the output word to 0000 again. The scaled conversion data 1254 will be set to the input word.

5-6 Monitoring

The input word data is used to monitor the present scaled conversion data or comparison result. To monitor the present scaled conversion data or comparison result by using a ladder program, set the mode select switch on the Programming Console to the OPERATION MODE and then retrieve the input word data.

Measurement Mode

The input word in measurement mode will be a binary-coded scaled conversion data. For example, when the factory-set scaling values are used, the input word will be set to 270F for +9999 and D8F1 (2's complement) for –9999.

If the scaled conversion data falls beyond the ±9999 range or if the input value falls in the overrange zone, B000 (overflow) will be set to the input word.

If the present scaled conversion data is indefinite, BBBB will be set to the input word.

Comparison Mode

The input word has flags for comparison results, overrange detection, and sensor disconnection detection as shown below.

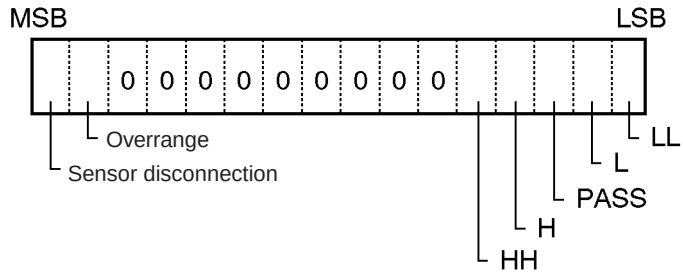

Refer to the following table for the ON and OFF conditions of the flags for the comparison results.

	ON	OFF
HH	Scaled conversion data ≥ HH set value	Scaled conversion data < HH set value – hysteresis
H	Scaled conversion data ≥ H set value	Scaled conversion data < H set value – hysteresis
L	Scaled conversion data ≤ L set value	Scaled conversion data > L set value + hysteresis
LL	Scaled conversion data ≤ LL set value	Scaled conversion data > LL set value + hysteresis
PASS	HH, H, L, and LL set values turned OFF	HH, H, L, or LL set values turned ON

If the Unit receiving 1- to 5-V or 4- to 20-mA input detects sensor disconnection, the Sensor Disconnection Flag will be ON and all the Comparison Result Flags will be OFF.

If input to the Unit is not within the permissible input range, the Overrange Flag will be ON. The status of each Comparison Result Flags will remain unchanged.

SECTION 6
Applied Operation

This section describes the applied operation of the Linear Sensor Interface Unit using the Programming Console.

6-1 Scaling Value Teaching 210
6-2 Set Value Teaching 211
6-3 Forced-zero Shift. 212
6-4 BCD Value Read 213
6-5 Monitor Output 214

6-1 Scaling Value Teaching

The scaling value teach command can be used only when the timing hold in operation mode A is set to normal.

It is possible to adjust the input scaling values by executing scaling value teaching with the scaling value teach command. The scaling value teach command uses the following command codes.

- X1 Scaling Value: C500
- X2 Scaling Value: C510

Setting Example

In this example, each scaling value is set as shown below. The timing hold is set to normal, and a 4-to 20-mA input sensor is connected to the Unit to measure objects.

X1: 0400
X2: 2000
Y1: 0000
Y2: 1000

Due to a sensor positional error, however, 0002 was obtained for the smallest object of all the objects and 0996 (with 03E4 displayed on the Unit) was obtained for the largest object of all the objects.

Therefore, using the teaching function, the X1 value needs adjustment for the smallest object and the X2 value needs adjustment for the largest object.

Operation

For the Smallest Object

1,2,3...

1. Adjust the X1 value with the smallest object using the teaching function. The input word reads 0002, which is the scaled conversion data of the smallest object measured with the Unit, and the output word reads 0000.

Output word Input word

```
c100 c001
0000 0002
```

2. Set the scaling value teach command code C500 for the X1 value to the output word. To input the letter C with the Programming Console, press the Shift and 2 Keys. The input word will be set to the response C500.

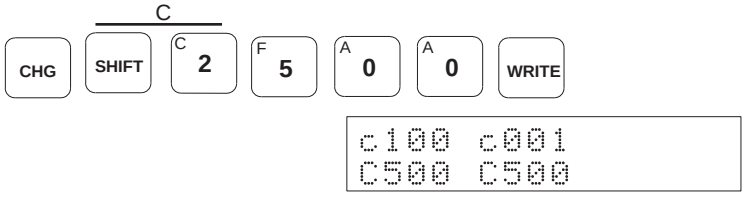

3. Set 0000 to the output word. When the input word is set to 0000, which is the scaled conversion data of the smallest object, the teaching for the X1 value has been correctly executed.

For the Largest Object

4. Adjust the X2 value with the largest object next. The input word reads 03E4 converted from 996, which is the scaled conversion data of the largest object measured with the Unit, and the output word reads 0000.

```
c100  c001
0000  03E4
```

996

5. Set the scaling value teach command code C510 for the X2 value. The input word will be set to the response C510.

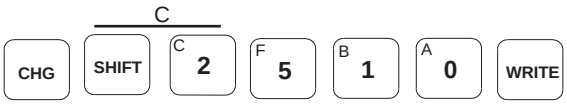


```
c100  c001
C510  C510
```

6. Set 0000 to the output word. When 03E8 is set to the input word, converted from 1000 (i.e., the scaled conversion data of the largest object measured with the Unit), the teaching for the X2 value has been correctly executed.

```
c100  c001
0000  03E8
```

1000

To check the adjusted values, execute the scaling value read command with the command code C600 or C610. The X1 value will read 0403 and the X2 value will read 1993.

6-2 Set Value Teaching

The set value teach command can be used for the Unit only when the timing hold in operation mode A is set to normal.

It is possible to use appropriate sample objects and adjust the set scaling values by executing set value teaching with the set value teach command as follows.

- LL Set Value: C800
- L Set Value: C810
- H Set Value: C820
- HH Set Value: C830

Setting Example

In this example, the timing hold is set to normal, and the L or H set value is adjusted using the teach function. The L set value is used for the smallest object of all the objects measured by the Unit and the H set value is used for the largest object of all the objects. The Unit is set to measurement mode so that the Unit will display the results of the operation.

Operation

For the Smallest Object

1,2,3...

1. Adjust the L value with the smallest object using the set value teaching function. The input word reads 0100, which is the scaled conversion data of the smallest object measured with the Unit, and the output word reads 0000.

Output word Input word

```
c100  c001
0000  0100
```

2. Input the set value teach command code C810 for the L value. To input the letter C with the Programming Console, press the Shift and 2 Keys. The input word will be set to the response C810.

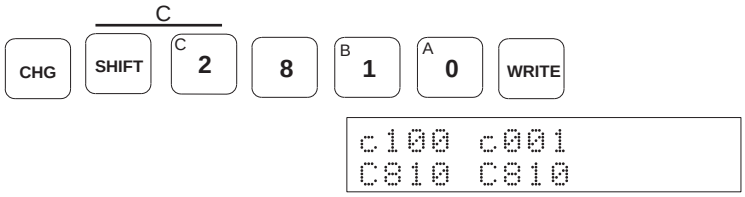

3. Set 0000 to the output word. 0100 will be set to the input word.

For the Largest Object

4. Adjust the H value with the largest object next. The input word reads 1000, which is the scaled conversion data of the largest object measured with the Unit, and the output word reads 0000.

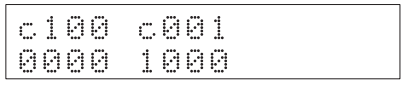

5. Input the set value teach command code C820 for the H value. The input word will be set to the response C820.

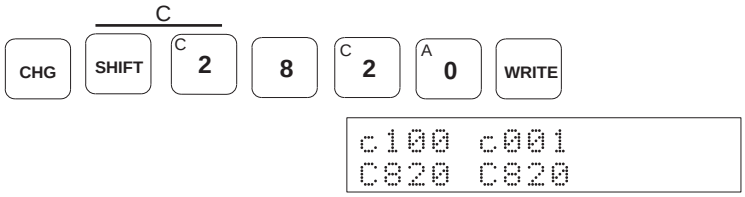

6. Set 0000 to the output word again. The input word will be set to 1000.

To check the adjusted values, execute the set value read command with the command code C910 or C920.

6-3 Forced-zero Shift

Use the forced-zero shift function to measure the relative values of objects based on the standard value determined for the Unit. This function requires ZERO and ZRES (zero reset) inputs to the Unit.

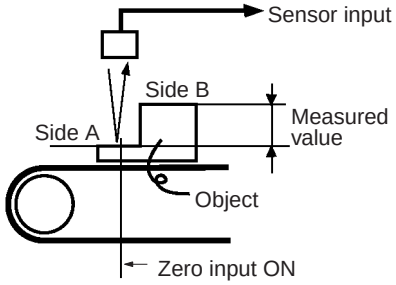

When zero input is turned ON while the Unit is sampling data, the scaled conversion data will be shifted to zero and stored as binary data in the input word,

or the comparison result flags of the input word are turned ON or OFF according to the comparison result processed by the Unit.

After the above processing, the sampling is performed with side A treated as the reference side. As the object moves, the Unit measures side B of the object and the scaled conversion data indicates the difference between the sides A and B.

Note

1. The forced-zero shift function is not effective when the timing hold is set to peak-to-peak hold.
2. The zero shift value stored in the RAM will be lost when the Unit is turned OFF. The RAM should be used to store the zero shift value if the zero shift function is frequently used during operation. The zero shift value stored in the nonvolatile memory will not be lost when the Unit is turned OFF. The zero shift value stored in the nonvolatile memory may not be, however, used more than 100,000 times. Decide where to keep the zero shift value according to the application.

Reference

The Unit ignores zero input when zero reset input is ON. Use the operation mode B set command to select the RAM or nonvolatile memory to store the zero shift value.

6-4 BCD Value Read

The present scaled conversion data can be read in BCD only when the timing hold in operation mode A is set to normal.

Use the present value read command and take the following steps to read the present scaled conversion data in BCD with the Programming Console.

Operation

1,2,3...

1. Set CC00 to the output word.

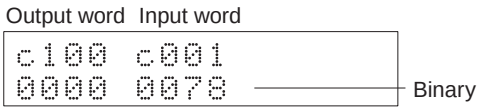

2. A000, which means positive, or A00F, which means negative, will appear under the input word display according to the present scaled conversion data.

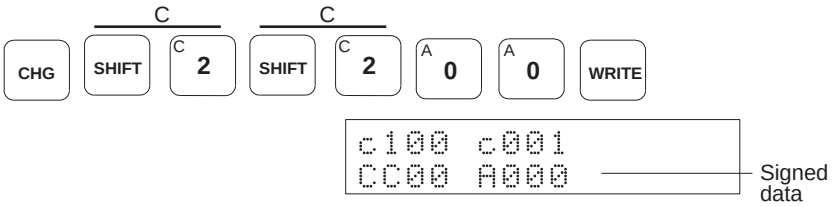

3. The present scaled conversion data will appear in approximately 0.5 seconds.

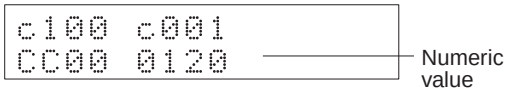

4. A000 or A00F will appear according to the present scaled conversion data in approximately 0.5 seconds.

```
c100 c001
CC00 A000
```

Signed data

5. While CC00 is set to the output word, the A000 or A00F and the present scaled conversion data will be repeatedly displayed alternately at approximately 0.5-s intervals.
6. Set 0000 to the output word again to cancel reading the present scaled conversion data in binary.

6-5 Monitor Output

The CQM1-LSE02 has a monitor output function.

The CQM1-LSE02 can be in scaled conversion data monitor mode or set data D/A output mode, either of which can be selected with the operation mode A set command.

The CQM1-LSE02 in scaled conversion data monitor mode does not require special operation settings. Refer to the following to operate the CQM1-LSE02 in set data D/A output mode.

In this mode, the monitor output terminal of the CQM1-LSE02 will have voltage output corresponding to the scaled conversion data which is written in the output word allocated to the Unit. Therefore, the ladder program enables the CQM1-LSE02 to output an analog input signal as a desired voltage value.

Refer to the following table to set signed binary data to use the monitor output function.

Set output binary data	Output voltage (V)
2710 (10000) min.	9.999
270F (9999)	9.999
0000	0000
D8F1 (–9999)	–9.999
D8F0 (–10000) max.	–9.999

There is no setting range restriction except for the following cases.

If the signed binary data of the CQM1-LSE02 output word is the same as or less than D8F0 (–10000), –9.999 V will be output from the monitor output terminal. If the signed binary data of the CQM1-LSE02 output word is the same as or larger than 2710 (10000), 9.999 V will be output from the monitor output terminal.

Note When obtaining the value to be set to the output word through calculation using the ladder program, be careful not to use the computed result of “C000 to CFFF.” Even when the Unit is used in the set data D/A output mode, if “C000 to CFFF” is set to the output word, it is treated as a command.

In this mode, analog input is converted into digital data and then converted into analog output. Therefore, the obtained analog output is not highly precise.

SECTION 7
Commands

This section provides details on the commands and responses of the Linear Sensor Interface Unit.

7-1 Command Usage 216
7-2 List of Commands 218
7-3 Commands and Responses 218
7-3-1 Operation Mode A Set 218
7-3-2 Operation Mode A Read 219
7-3-3 Operation Mode B Set 220
7-3-4 Operation Mode B Read 221
7-3-5 Scaling Value Set 222
7-3-6 Scaling Value Teach 223
7-3-7 Scaling Value Read 223
7-3-8 Set Value Set 224
7-3-9 Set Value Teach. 225
7-3-10 Set Value Read 225
7-3-11 Hysteresis Set 226
7-3-12 Hysteresis Read 226
7-3-13 Present Value Read 227

7-1 Command Usage

There are four types of commands.

The command codes can be set to output word. If no command is used, set 0000 to the output word.

When a command is executed, the input word will have a response. If no command is executed, the present scaled conversion data or comparison result will be stored in the input word.

Note Some commands cannot be used depending on the contents of settings in the operation mode A or B.

Teach Commands

Scaling Value Teach

Set Value Teach

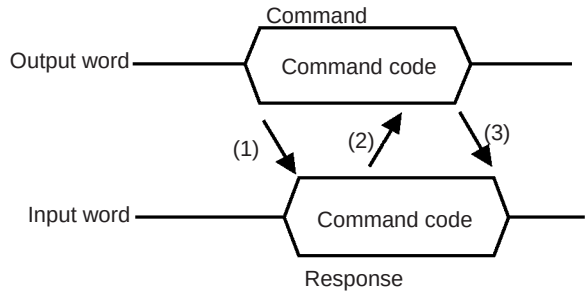

1,2,3...

1. Set the command code to the output word. The Unit will check the command code. If the command code is correct, the same command code will be set to the input word as the response for the command. If the command code is incorrect, an error code will be set to the input word.
2. After confirming that the response sent back to the input word is correct, set 0000 to the output word.
3. The scaled conversion data or comparison result will stored in the input word.

Read Commands

Operation Mode A Read

Operation Mode B Read

Hysteresis Read

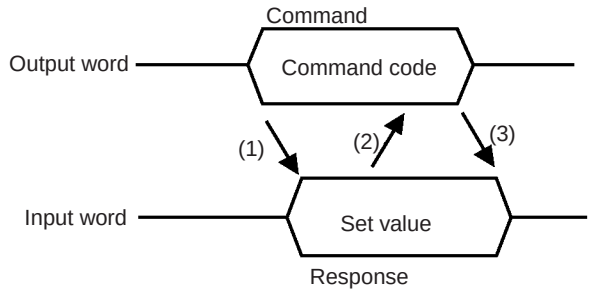

1,2,3...

1. Set the command code to the output word. The Unit will check the command code. If the command code is correct, a set value will be set to the input word corresponding to the command as the response for the command. If the command code is incorrect, an error code will be set to the input word.
2. After confirming that the response sent back to the input word is correct, set 0000 to the output word.

3. The scaled conversion data or comparison result will stored in the input word.

Set Commands

Operation Mode A Set
Operation Mode B Set
Scaling Value Set
Set Value Set
Hysteresis Set

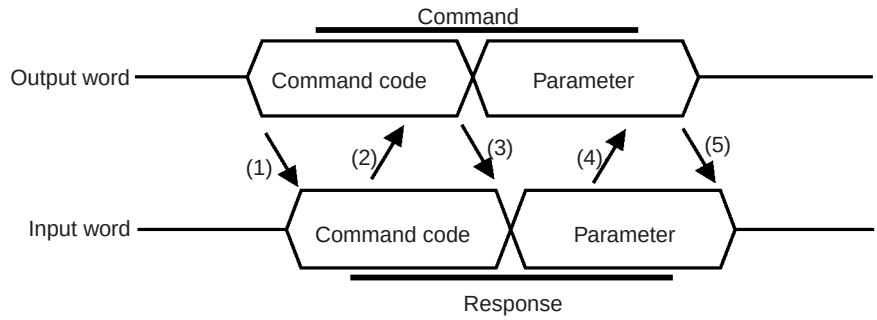

1,2,3...

1. Set the command code to the output word. The Unit will check the command code. If the command code is correct, the same command code will be set to the input word as the response for the command. If the command code is incorrect, an error code will be set to the input word.
2. After confirming that the response sent back to the input word is correct, set a parameter to the output word.
3. The Unit will check the parameter. If the parameter is correct, the parameter will be set to the input word as the response for the parameter. If the parameter is incorrect, an error code will be set to the input word.
4. After confirming that the response sent back to the input word is correct, set 0000 to the output word. The scaled conversion data or comparison result will stored in the input word.

Signed Set Value Read Commands

Scaling Value Read
Set Value Read
Hysteresis Read

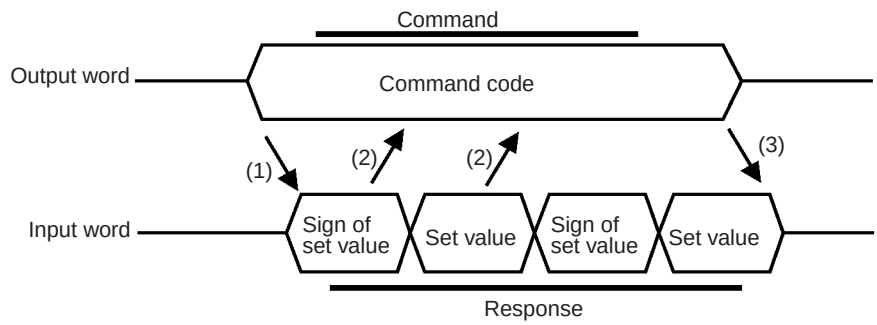

1,2,3...

1. Set the command code to the output word. The Unit will check the command code. If the command code is correct, the sign for a set value will be set to the input word corresponding to the command as the response for the command. If the command code is incorrect, an error code will be set to the input word.
   The set value will be set to the input word approximately 0.5 s after the sign is set to the input word. The sign and set value will be set to the input word alternately at approximately 0.5-s intervals.

2. After confirming that the sign and the set value that the input word is set to is correct, set 0000 to the output word.
3. The scaled conversion data or comparison result will stored in the input word.

Note The Linear Sensor Interface Unit acknowledges the start or end of a command through a change in the output word value. When “0000” is set to the parameter by the setting command, for example, even if “0000” is set at the end of the command, the command doesn’t end because there is no change in the output word value, not allowing scaled conversion data or comparison result to be set in the input word. To end the command, set a value other than the one set to the parameter. However, that the value will be reflected on the monitor output if the Unit is used in the set data D/A output mode. Therefore, when using the Unit in the set data D/A output mode, be sure to select a value which will not affect peripheral devices.

7-2 List of Commands

The following commands can be used to set the initial parameters through the Programming Console.

Command	Command code	Meaning	Reference page
Operation mode A set	C000	Used to set operation mode A.	218
Operation mode A read	C100	Used to read the settings of operation mode A.	219
Operation mode B set	C200	Used to set operation mode B.	220
Operation mode B read	C300	Used to read the settings of operation mode B.	221
Scaling value set	C4**	Used to set a scaling value.	222
Scaling value teach	C5*0	Used to execute scaling value teaching.	223
Scaling value read	C6*0	Used to read a scaling value.	223
Set value set	C7**	Used to set a set value.	224
Set value teach	C8*0	Used to execute the set value teaching.	225
Set value read	C9*0	Used to read a set value.	225
Hysteresis set	CA00	Used to set hysteresis.	226
Hysteresis read	CB00	Used to read the hysteresis.	226
Present value read	CC00	Used to read the present scaled conversion data.	227

7-3 Commands and Responses

7-3-1 Operation Mode A Set

This command is used to set the following operation mode data.

- Data input
- Timing hold
- Input type
- Monitor output

The above items will be stored in the nonvolatile memory and will not be lost after the Unit is turned OFF.

Command

Command Code

C	0	0	0

Parameter

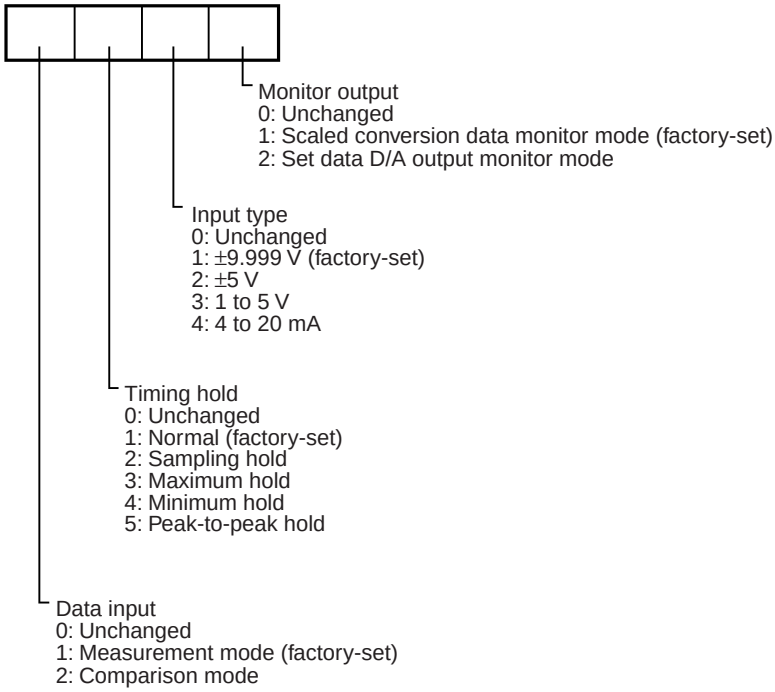

Response

If the correct command code or parameter is set to the output word, the same command code or parameter will be set to the input word.

If the wrong command code or parameter is set to the output word, one of the following error codes will be set to the input word.

E000: This error code will be set to the input word if a nonexisting command code is used.

E001: This error code will be set to the input word if the parameter is not within the range covered by the Unit.

7-3-2 Operation Mode A Read

This command is used to read the data that has been input in operation mode A.

Command

Command Code

C	1	0	0

Parameter Parameters are not used with this command.

Response

If the correct command code is set to the output word, the command code or parameter is set to the input word as a response.

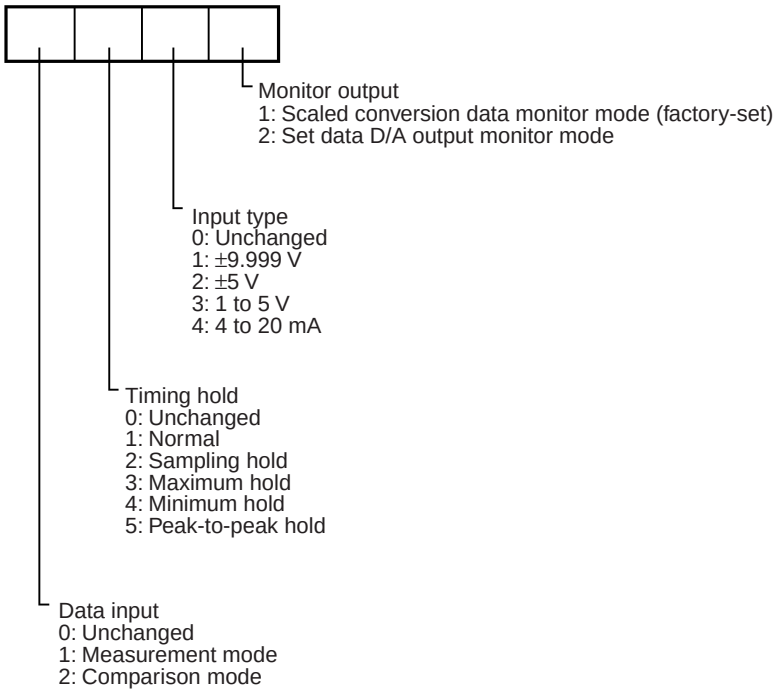

If the wrong command code is set to the output word, the following error code will be set to the input word.

E000: This error code will be set to the input word if a nonexisting command code is used.

7-3-3 Operation Mode B Set

This command is used to set the following.

- Input sampling speed
- Number of mean value processings
- Zero shift value storage area

The above items will be stored in the nonvolatile memory and will not be lost after the Unit is turned OFF.

Command

Command Code

C	2	0	0

Parameter

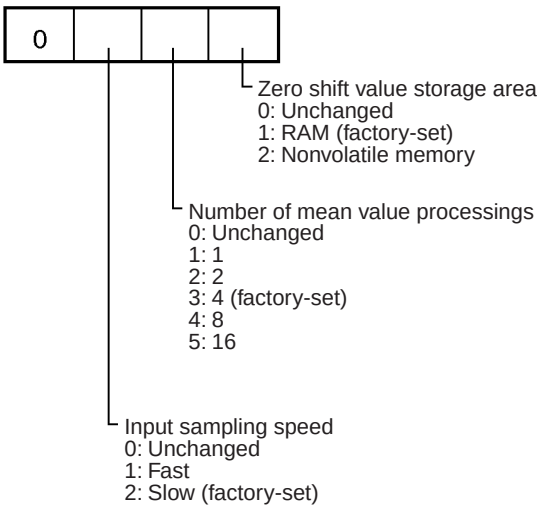

Response

If the correct command code or parameter is set to the output word, the command code or parameter is set to the input word as a response.

If the wrong command code or parameter is set to the output word, one of the following error codes will be set to the input word.

E000: This error code will be set to the input word if a nonexisting command code is used.

E001: This error code will be set to the input word if the parameter is not within the range covered by the Unit.

7-3-4 Operation Mode B Read

This command is used to read the data that has been input in operation mode B.

Command

Command Code

C	3	0	0

Parameter Parameters are not used with this command.

Response

If the correct command code is set to the output word, the command code or parameter is set to the input word as a response.

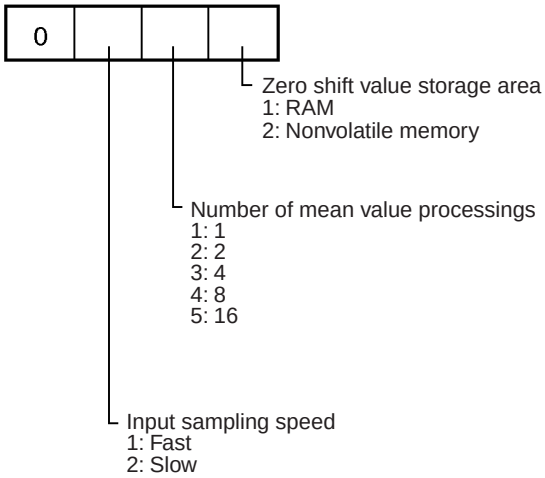

If the wrong command code is set to the output word, the following error code will be set to the input word.

E000: This error code will be set to the input word if a nonexisting command code is used.

7-3-5 Scaling Value Set

This command is used to set the X1, X2, Y1, or Y2 scaling value.

If the input type data is changed, the scaling value will be set to the factory-set scaling value.

The set data will be stored in the nonvolatile memory and will not be lost after the Unit is turned OFF.

Command

Command Code

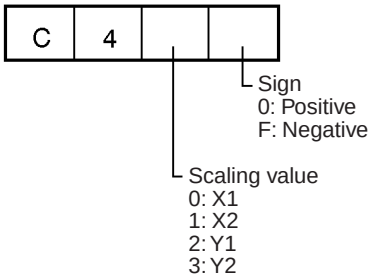

Parameter

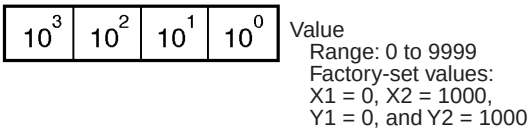

Response

If the wrong command code is set to the output word, the following error code will be set to the input word.

E000: This error code will be set to the input word if a nonexisting command code is used.

E001: This error code will be set to the input word if the parameter is not within the range covered by the Unit.

7-3-6 Scaling Value Teach

This command can be used only when the timing hold in operation mode A is set to normal.

This command is used to execute scaling value teaching. When scaling value teaching is executed, the present input value can be used as the X1 or X2 scaling value.

Command

Command Code

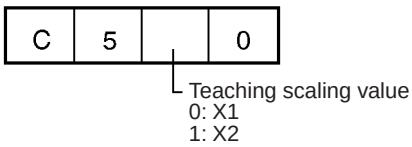

Parameter Parameters are not used with this command.

Response

If the wrong command code is set to the output word, the following error code will be set to the input word.

E000: This error code will be set to the input word if a nonexisting command code is used.

E002: Teaching command execution error

E003: This error code will be set to the input word if the mode designation for this command is not correct.

7-3-7 Scaling Value Read

This command is used to read a scaling value.

Command

Command Code

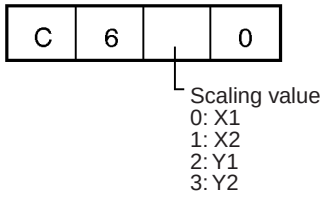

Parameter Parameters are not used with this command.

Response

If the output word is set to the correct command code, the sign of the scaling value and the scaling value will be set to the input word alternately in the following format.

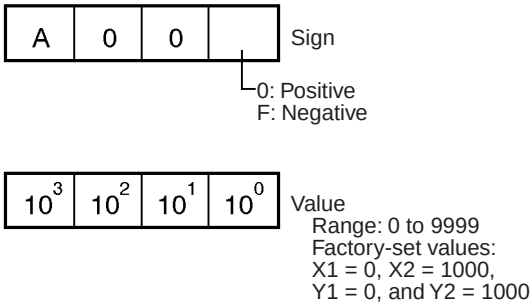

If the wrong command code is set to the output word, the following error code will be set to the input word.

E000: This error code will be set to the input word if a nonexisting command code is used.

7-3-8 Set Value Set

This command is used to set the HH, H, L, or LL set value.

The set value will be stored in the nonvolatile memory and will not be lost after the Unit is turned OFF.

Command

Command Code

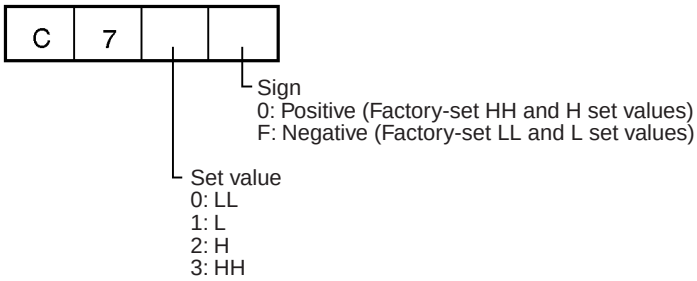

Parameter

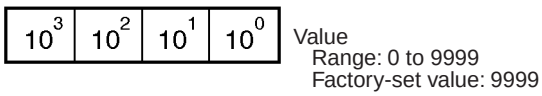

Response

If the correct command code or parameter is set to the output word, the same command code or parameter will be set to the input word.

If the wrong command code or parameter is set to the output word, one of the following error codes will be set to the input word.

E000: This error code will be set to the input word if a nonexisting command code is used.

E001: This error code will be set to the input word if the parameter is not within the range covered by the Unit.

7-3-9 Set Value Teach

This command can be used only when the timing hold in operation mode A is set to normal.

This command is used to execute set value teaching. When set value teaching is executed, the present input value can be used as the HH, H, L or LL set value.

Command

Command Code

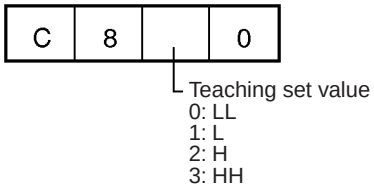

Parameter Parameters are not used with this command.

Response

If the wrong command code is set to the output word, the following error code will be set to the input word.

E000: This error code will be set to the input word if a nonexisting command code is used.

E002: Teaching command execution error

E003: This error code will be set to the input word if the mode designation for this command is not correct.

7-3-10 Set Value Read

This command is used to read a set value.

Command

Command Code

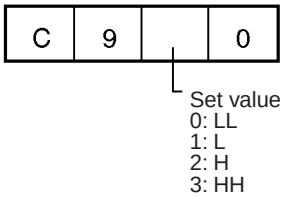

Parameter Parameters are not used with this command.

Response

If the output word is set to the correct command code, the sign of the set value and the set value will be set to the input word alternately in the following format.

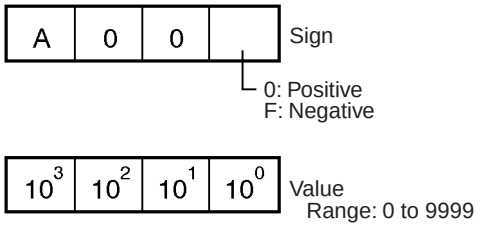

If the output word is set to the wrong command code, the following error codes will be set to the input word.

E000: This error code will be set to the input word if a nonexisting command code is used.

7-3-11 Hysteresis Set

This command is used to set the hysteresis.

If the input type data is changed, the hysteresis will be reset to its factory-set value.

The set data will be stored in the nonvolatile memory and will not be lost after the Unit is turned OFF.

Command

Command Code

C	A	0	0

Parameter

0	10^2	10^1	10^0

Range: 0001 to 0999
Factory-set value: 0001

Response

If the correct command code or parameter is set to the output word, the same command code or parameter will be set to the input word.

If the wrong command code or parameter is set to the output word, one of the following error codes will be set to the input word.

E000: This error code will be set to the input word if a nonexisting command code is used.

E001: This error code will be set to the input word if the parameter is not within the range covered by the Unit.

7-3-12 Hysteresis Read

This command is used to read the hysteresis.

Command

Command Code

C	B	0	0

Parameter

Parameters are not used with this command.

Response

If the correct command code or parameter is set to the output word, the same command code or parameter will be set to the input word.

0	10^2	10^1	10^0

Range: 0001 to 0999
Default value: 0001

If the wrong command code or parameter is set to the output word, one of the following error codes will be set to the input word.

E000: This error code will be set to the input word if a nonexisting command code is used.

7-3-13 Present Value Read

This command can be used only when the timing hold in operation mode A is set to normal.

This command is used to read the present measured value after scaling.

Command

Command Code

C	C	0	0

Parameter

Parameters are not used with this command.

Response

If the correct command code or parameter is set to the output word, the present conversion data will be set to the input word.

A	0	0	

Sign

0: Positive
F: Negative

10^3	10^2	10^1	10^0

Value
Range: 0 to 9999

If the wrong command code or parameter is set to the output word, one of the following error codes will be set to the input word.

E000: This error code will be set to the input word if a nonexisting command code is used.

E003: This error code will be set to the input word if the mode designation for this command is not correct.

Appendix A
Specifications

Standard Specifications

The standard specifications of the CQM1-LSE01/LSE02 conform to those of SYSMAC CQM1H/CQM1-series PCs.

Performance Specifications

Item			CQM1-LSE01	CQM1-LSE02
Input	**No. of analog input points**		1	
	Input range	**Voltage input**	1 to 5 V, –9.999 to 9.999 V, –5 to 5 V	
		Current input	4 to 20 mA	
	Input impedance	**Voltage input**	1 MΩ min.	
		Current input	10 Ω	
	Linearity		±0.1% FS ±1 digit max. with input sampling speed set to slow ±0.5% FS ±1 digit max. with input sampling speed set to fast	
PC output code			Signed binary (–9999 to 9999)	
Sampling time			0.3 ms with input sampling speed set to fast and 0.6 ms with input sampling speed set to slow	
Sampling period			1 ms with input sampling speed set to fast and 2 ms with input sampling speed set to slow	
Operation processing time			5 ms	
External control input			TIMING/GATE, ZERO, ZERO RESET, RESET	
No. of occupied words			1 input word and 1 output word	
Monitor output	**Voltage output**		---	–9.999 V to 9.999 V
	Output linearity		---	±0.1% FS
	Output resolution		---	1/8192
	Output refresh period		---	0.5 s
	Output response time		---	0.5 s
	Permissible load resistance		---	10 kΩ min.
Insulation method			Photocoupler insulation between input terminals and PC signals and between input terminals and output terminals.	
Dielectric strength			500 VAC for 1 minute between input terminals and output terminals 1,000 VAC for 1 minute between I/O terminals and FG	
Current consumption			380 mA max. at 5 VDC	450 mA max. at 5 VDC
Dimensions			32 x 110 x 107 (W x H x D) mm	
Weight			230 g max.	

External Control Input Specifications

Item	Specification
Input voltage	24 VDC $^{+10\%}/_{-15\%}$
Input impedance	TIMING/GATE: 2 kΩ Other control output: 2.2 kΩ
Input current	TIMING/GATE: 9.2 mA TYP. Other control output: 10 mA TYP. (24 VDC)
ON voltage	TIMING/GATE: 16.3 VDC min. Other control output: 17.1 VDC min.
OFF voltage	TIMING/GATE: 3.8 VDC max. Other control output: 3.6 VDC max.
ON/OFF response time (see note)	TIMING/GATE: 50 µs TYP. Other control output: 4 ms TYP.
Circuit configuration	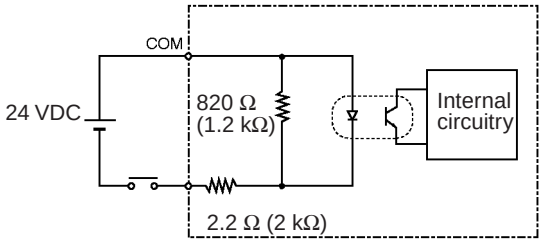 Figures in parentheses are values for TIMING input and GATE input.

Note The ON/OFF response time is the time required for the Unit's CPU to detect input turned ON or OFF.

Dimensions

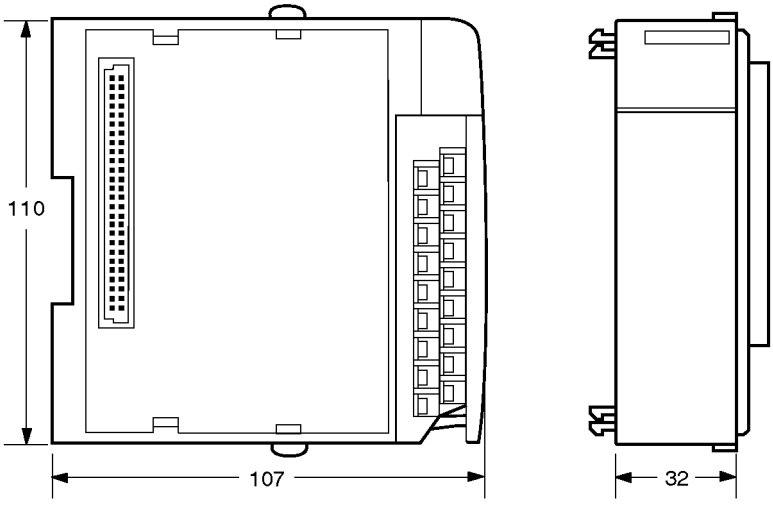

(Unit: mm)

Appendix B

Block Diagram

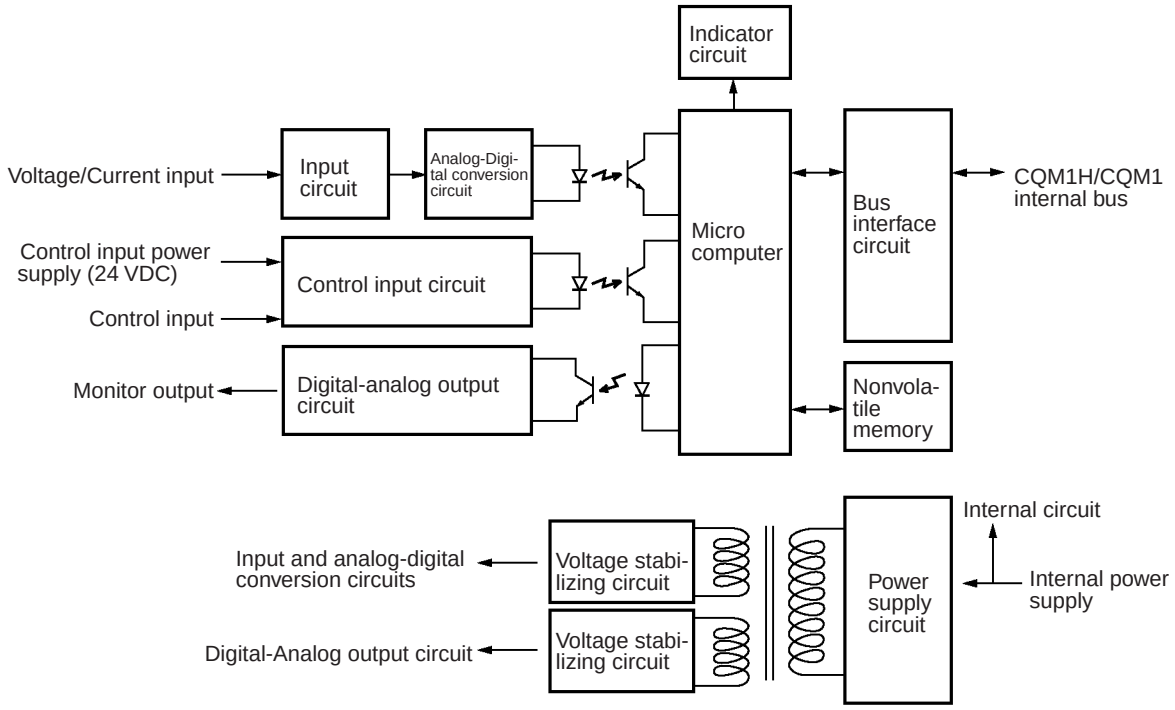

Appendix C
Data Processing Timing

Sampling

The Unit processes input data in the following two blocks.

- A: Input sampling time = Sampling period x No. of mean value processings
- B: Operation process and data set to the data input word

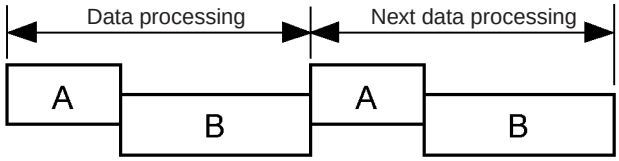

The Unit has the following two sampling periods.

- Fast: 1 ms (with 0.3-ms sampling time)
- Slow: 2 ms (with 0.6-ms sampling time)

The necessity of the sampling hold process depends on the timing hold.

Sampling Example

The following are typical sampling timing examples.

Example 1

Timing Hold: Normal
No. of Mean Value Processings: 1
Input Sampling Speed: Fast

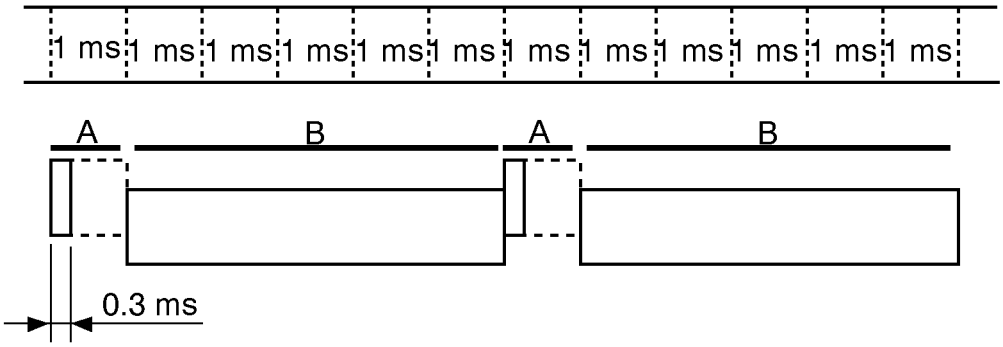

Example 2

Timing Hold: Sampling hold
No. of Mean Value Processings: 4
Input Sampling Speed: Fast

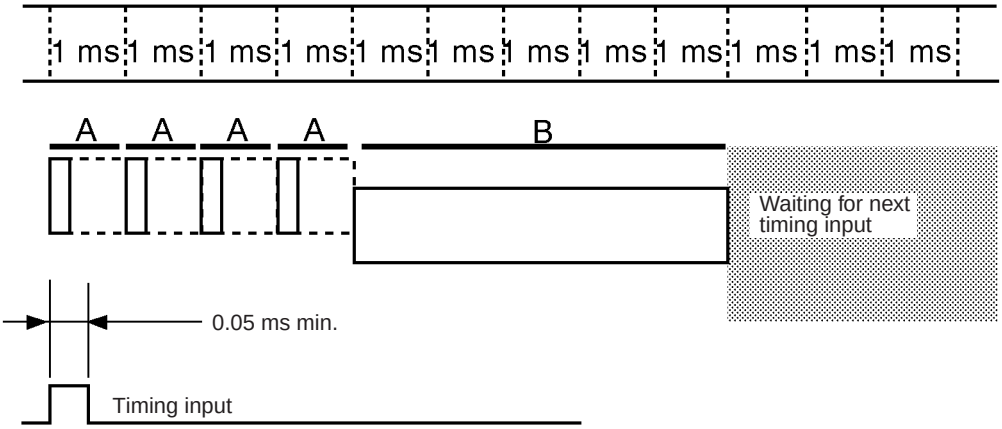

Example 3 Timing Hold: Maximum hold
No. of Mean Value Processings: 2
Input Sampling Speed: Fast

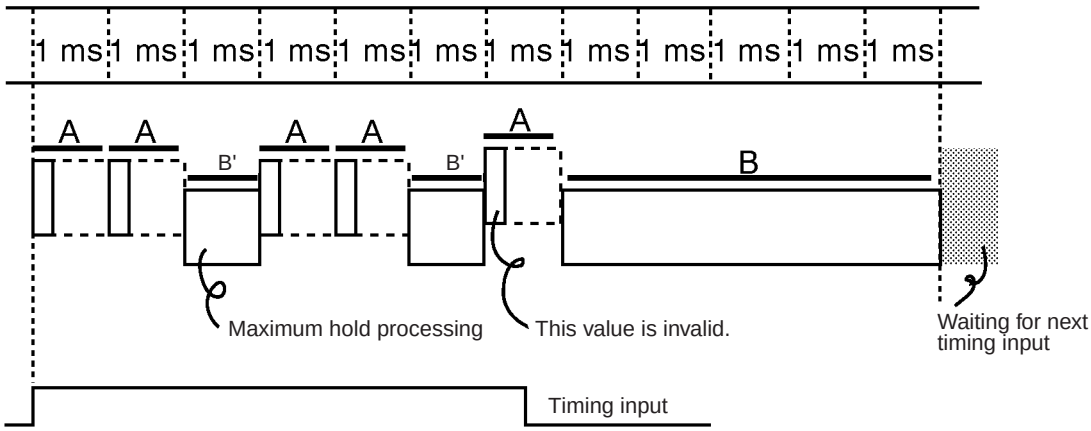

Data Read

When a ladder program is used to automatically read the data to be input, the data is sampled in synchronization with timing input. Therefore, the CPU used with the Unit must read the data in synchronization with the sampling timing.

Timing Input Connected in Parallel

The timing signal can connect with the TIMING/GATE terminal and the input word of the CPU in parallel as shown in the following illustration to synchronize the operation of the CPU and the sampling timing of the Unit.

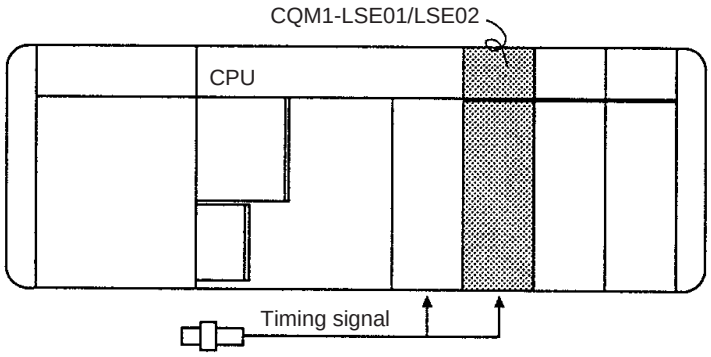

The Unit requires time to process input and to set data to its input word corresponding to the input. The actual data reading timing must be later than the moment timing input to the Unit is ON. The input process time varies with the timing hold currently selected. The following is the input process time with its timing hold set to sampling hold.

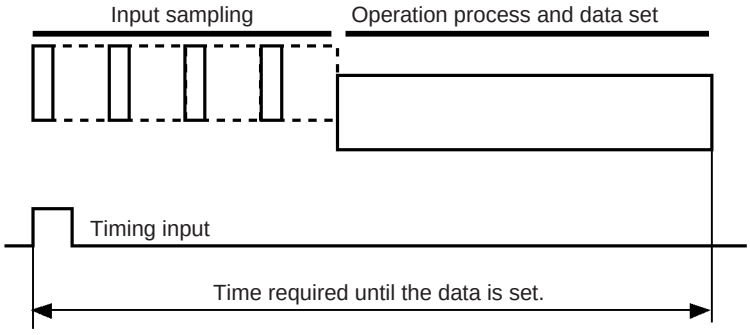

Using Reset Input

Connect a bit of the output word to the Unit's reset input terminal. If reset input is ON, the input word will be set to BBBB (i.e., the factory-set setting of the input word). Take the following steps to set the input word to BBBB.

1,2,3...

1. Turn reset input ON.
2. When BBBB is set to the input word, turn reset input OFF.
3. If BBBB is set to data other than the input word, let the Unit read the data.
4. Repeat the above steps.

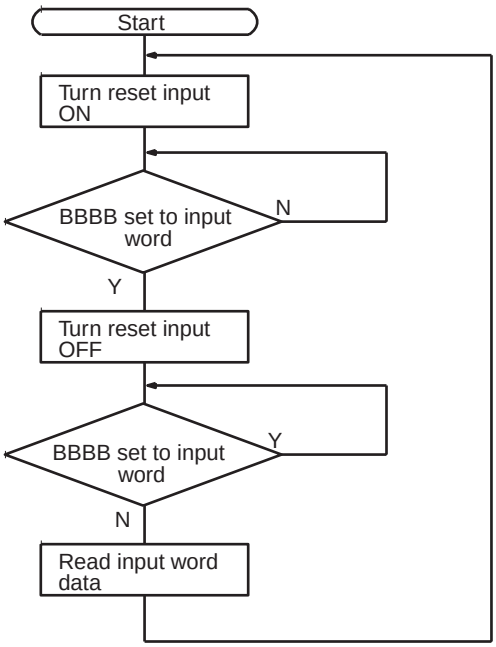

Timing Input and Reset Input

When the timing hold is not set to normal or sampling hold, timing input to the Unit will work as gate input, in which case reset input to the Unit will work as follows:

1,2,3...

1. If timing input is turned OFF while reset input is ON, the present scaled conversion data will not be effective and BBBB will be read as the present scaled conversion data.
2. The Unit will sample and process input from the moment reset input is turned OFF to the moment timing input is turned OFF, in which case, while the reset input in ON, BBBB will be read as the present scaled conversion data.
3. The Unit will sample and process input from the moment reset input is turned OFF to the moment timing input is OFF, in which case, input from the moment the timing input is turned ON to the moment reset input is turned ON will not be effective.
4. The Unit will ignore timing input while reset input is ON.

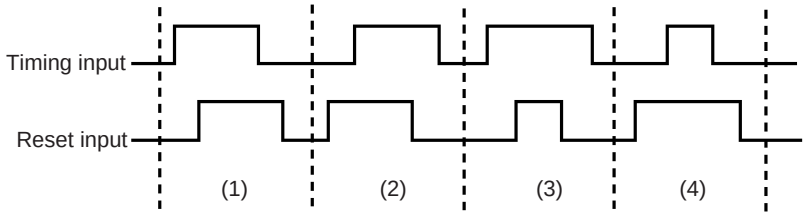

Appendix D
Troubleshooting

Internal Error

ERR indicator is lit.

Word status	Possible cause and remedy
BEEE	CPU error. Turn the power OFF and then ON again, once. If the ERR indicator is still lit, the Unit needs repairs.
B010	RAM error (calibration data error). Turn the power OFF and then ON again, once. If the ERR indicator is still lit, the Unit needs repairs.
B011	Set value data error. Turn the power OFF and then ON again, once, or reset all the initial values of the Unit again and execute the zero reset.

Sensor Error

BROKEN-WIRE indicator is lit.

Word status	Possible cause and remedy
B001 (measurement mode) Bit 15 = 1 (comparison mode)	Check if the wires of the sensor connected to the Unit are broken, short circuited, or incorrectly connected to the Unit.

Overflow

Word status	Possible cause and remedy
B000 (measurement mode) Bit 14 = 1 (comparison mode)	Set all the set values within the permissible ranges of the Unit.

Command Error

Word status	Possible cause and remedy
E000	A nonexisting command code was used. Check the command description.
E001	Parameter setting range error. Set the parameter correctly and execute the command.
E002	Teach command execution error. Cancel the following conditions and execute the teach command again. Reset input Sensor error Overflow
E003	Mode designation error. The command C500, C800, or CC00 can be set to the output word only when the timing hold mode is set to normal. Set the timing hold mode to normal in the operation mode A and execute the required command again.

PART VIII
Temperature Control Units

CQM1-TC001

CQM1-TC002

CQM1-TC101

CQM1-TC102

CQM1-TC201

CQM1-TC202

CQM1-TC301

CQM1-TC302

CQM1-TC203

CQM1-TC204

CQM1-TC303

CQM1-TC304

SECTION 1
Temperature Control Unit Model Numbers

This section lists the Temperature Control Unit model numbers and the basic specifications for each Unit.

Temperature Control Units are classified into models according to the number of input loops, the type of output, and other functions, as listed in the following diagram.

CQM1-TC□□□

Two input loops, basic functions (Word allocations: 2 input and 2 output words)

- 001: Thermocouple input (K, J), NPN output
- 002: Thermocouple input (K, J), PNP output
- 101: Platinum resistance thermometer (Pt100, JPt100), NPN output
- 102: Platinum resistance thermometer (Pt100, JPt100) PNP output

Refer to pages 272 to 287.

Four input loops, advanced functions (Word allocations: 1 input and 1 output word)

- 201: Thermocouple input (K, J, T, L, R, S, B), NPN output
- 202: Thermocouple input (K, J, T, L, R, S, B), PNP output
- 301: Platinum resistance thermometer (Pt100, JPt100), NPN output
- 302: Platinum resistance thermometer (Pt100, JPt100) PNP output

Two input loops, heater burnout alarm (Word allocations: 1 input and 1 output word)

- 203: Thermocouple input (K, J, T, L, R, S, B), NPN output
- 204: Thermocouple input (K, J, T, L, R, S, B), PNP output
- 303: Platinum resistance thermometer (Pt100, JPt100), NPN output
- 304: Platinum resistance thermometer (Pt100, JPt100) PNP output

Refer to pages 244 to 270.

SECTION 2
CQM1-TC20□/TC30□ Temperature Control Units

This section describes the features and operation of the CQM1-TC20□/TC30□ Temperature Control Units.

2-1 Features and Word Allocations 244
2-1-1 Features 244
2-1-2 Word Allocations 244
2-2 Specifications 245
2-3 Nomenclature 248
2-4 Terminology and Function Descriptions 251
2-5 Wiring 253
2-6 Application 254
2-6-1 Communications Procedure 255
2-6-2 Using Operation Control Commands 258
2-7 IOTC(—) 262
2-7-1 Sending I/O Allocation Commands 262
2-7-2 Sending Operation Control Commands 263
2-8 Troubleshooting 269
2-9 Command Tables 270

2-1 Features and Word Allocations

2-1-1 Features

- The PID with advanced feed-forward circuitry (2 degrees of freedom) of the CQM1-TC20□/TC30□ assures stable temperature control. The Units can also be set to ON/OFF control.
- Temperature Control Units are available for either 4-loop temperature control or 2-loop temperature control, and Units with 2-loop temperature control provide a heater burnout alarm. You can also select between thermocouples or platinum resistance thermometers as the input sensors.

Temperature Control Units

Inputs		Output type	
		NPN outputs	**PNP outputs**
4 loops	Thermocouples	CQM1-TC201	CQM1-TC202
	Platinum resistance thermometers	CQM1-TC301	CQM1-TC302
2 loops with heater burnout alarm	Thermocouples	CQM1-TC203	CQM1-TC204
	Platinum resistance thermometers	CQM1-TC303	CQM1-TC304

Temperature Ranges

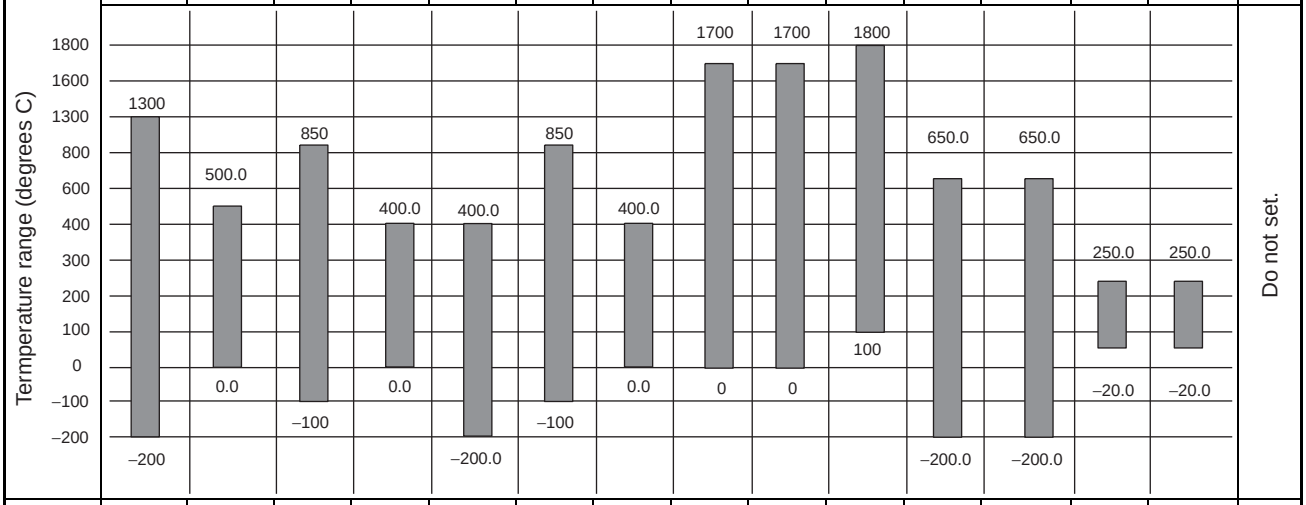

Note K (CA) = Chromel/alumel, J (IC) = Iron/constantan, T (CC) = Copper/constantan, L = Iron/constantan, R = Platinum/platinum rhodium 13%, S = Platinum/platinum rhodium 10%, B = Platinum rhodium 30%/platinum rhodium 6%

2-1-2 Word Allocations

- One word each is allocated to the Temperature Control Unit for inputs and outputs.
- Commands are used to set and read data.

- The IOTC(—) instruction can be used to simplify programming when using CX-Programmer version 2.0 or higher and a CQM1H CPU Unit with a lot number of 0160 or later.

2-2 Specifications

General Specifications

The general specifications of the CQM1-TC20□/TC30□ conform to those of the CQM1H/CQM1 Series.

Performance Specifications

Item	Specification	
	Units for thermocouples (CQM1-TC20□)	**Units for platinum resistance thermometers (CQM1-TC30□)**
Sensor type (See previous page for temperature ranges.)	K, J, T, L, R, S, B	Pt100, JPt100
Number of control loops	2 loops or 4 loops (2-loop model has heater burnout alarm)	
Control output	NPN or PNP output with short-circuit protection Power supply voltage: 24 VDC $^{+10\%}/_{-15\%}$ Maximum switching capacity: 100 mA per output Leakage current: 0.1 mA max. Residual voltage: 0.8 V max.	
Control mode	ON/OFF control, advanced PID control (2 degrees of freedom), or manual operation	
Setting and display accuracy	°C Ranges (Process value ±0.3% or ±1 °C, whichever is larger) ±1 digit max. °F Ranges (Process value ±0.3% or ±2 °F, whichever is larger) ±1 digit max. (See note 1.) The accuracy is given when the cold junction compensator on the terminal block is used. Always use the cold junction compensator on the terminal block. (See note 2.)	0.1 °C Ranges (Process value ±0.3% or ±0.8 °C, whichever is larger) ±1 digit max. 0.1 °F Ranges (Process value ±0.3% or ±1.6 °F, whichever is larger) ±1 digit max. (See note 1.) 0.01 °C Ranges (Process value ±0.3% or ±0.5 °C, whichever is larger) ±1 digit max.
Hysteresis adjustment	0.1 to 999.9 °C/°F (0.1°C/°F unit)	
Proportional band	0.1 to 999.9 °C/°F (0.1°C/°F unit)	
Derivative time	0 to 3,999 s (1 s unit)	
Integral time	0 to 3,999 s (1 s unit)	
Manual manipulated variable	0.0 to 100.0% (0.1% unit)	
Control period	1 to 99 s (1 s unit)	
Input shift value	–99.9 to 999.9 °C/°F (0.1°C/°F unit)	0.1 °C Ranges –99.9 to 999.9 °C/°F (0.1°C/°F unit) 0.01 °C Ranges –9.99 to 99.99 °C/°F (0.01°C/°F unit)
Sampling period	0.5 s	
Output refresh period	0.5 s	
Current consumption	190 mA max. at 5 VDC	
Weight	200 g max.	
Dimensions	32 x 110 x 107 mm (W x H x D)	

Note 1. The accuracy of K and J thermocouples at or below –100 °C is ±2 °C ±1 digit max., and the accuracy of R and S thermocouples at or below 200 °C

is ±3 °C ±1 digit max. The accuracy of B thermocouples at or below 400 °C is not specified.

2. When returning a Unit for repairs, always include the terminal block (or the cold junction compensator).

Heater Burnout Alarm (CQM1-TC□03/TC□04)

Item	Specification
Maximum heater current	50 A, single-phase AC
Input current monitoring accuracy	±5 % FS ±1 digit
Heater burnout alarm setting	0.1 to 49.9 A (0.1 A unit) (See note 1.)
Minimum ON time for detection	200 ms (See note 2.)

Note

1. Heater burnout detection will be disabled if the alarm is set to 0.0 A. The heater burnout alarm output will turn ON if the alarm is set to 50.0 A.
2. If the control output is ON for less than 200 ms, heater burnout will not be detected and the heater current will not be measured.

Current Detector (CT) Ratings

Item	E54-CT1	E54-CT3
Continuous maximum heater current	50 A	
Range for accurate measurement	0 to 30 A	0 to 50 A
Withstand voltage	1,000 VAC	
Shock resistance	50 Hz (Approx. 10 G)	
Hole diameter	5.8 mm	12.0 mm
Weight	Approx. 11.5 g	Approx. 50 g
Accessories	None	Contactors: 2 Plugs: 2

Dimensions:

CQM1-TC20□/TC30□

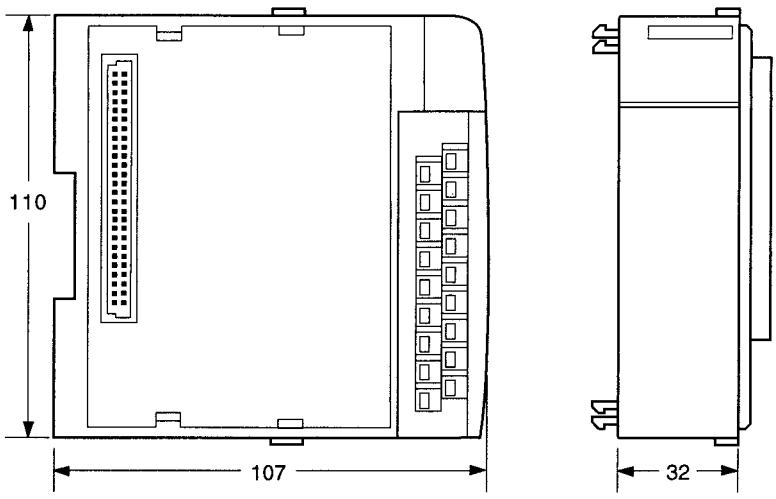

Unit: mm

Current Detector (Sold Separately)

E54-CT1

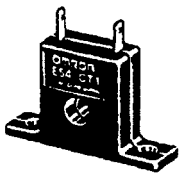

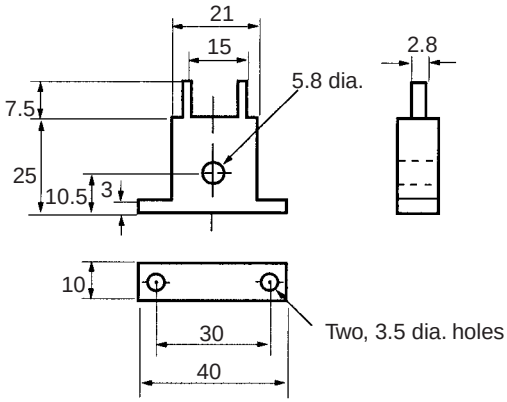

E54-CT3

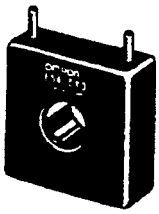

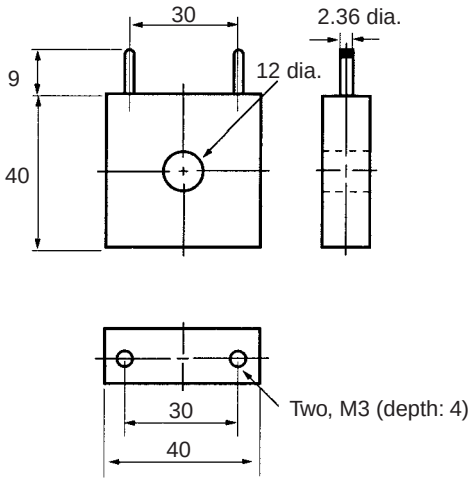

Unit: mm

2-3 Nomenclature

Front View

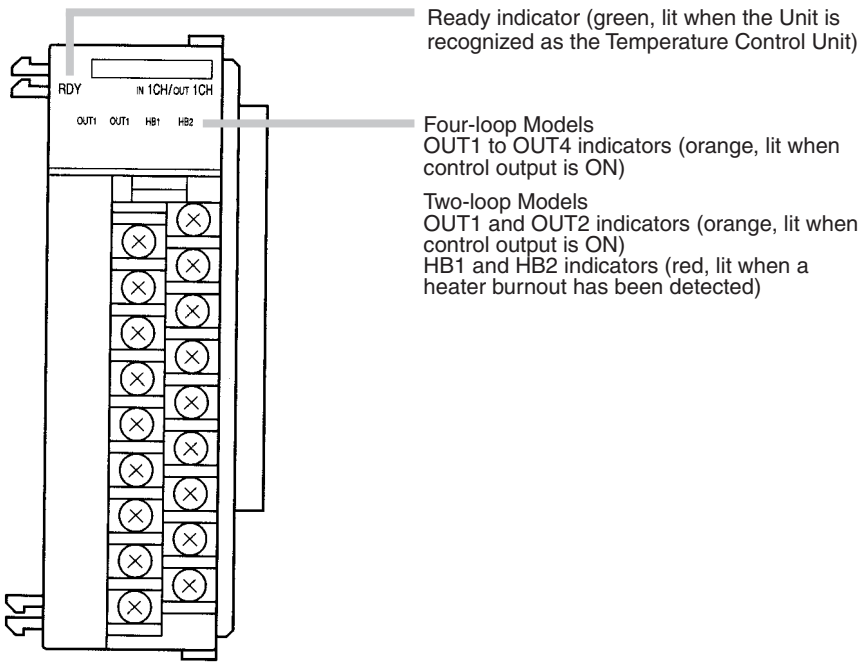

Terminal screws: M3

Side View

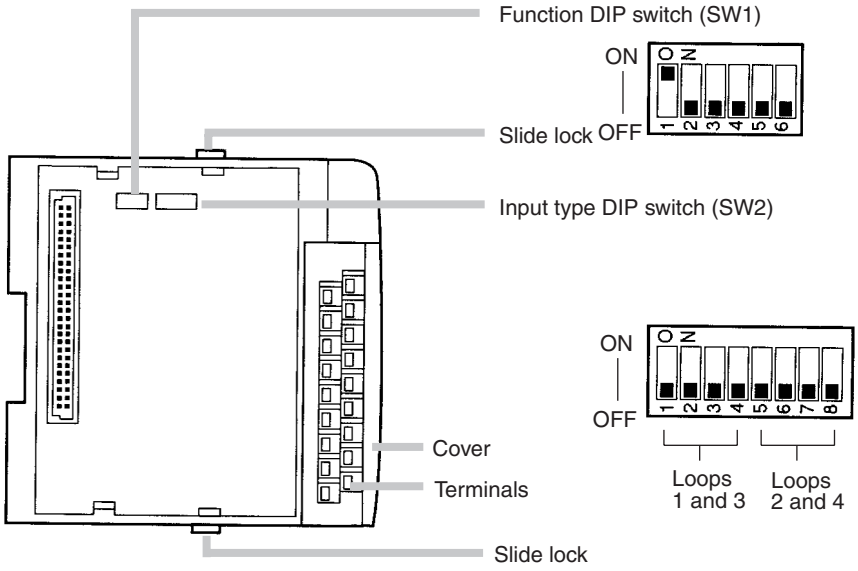

Switch Settings

Set all switches before mounting the Unit. Factory settings are shown in bold text in the following table.

Function DIP Switch (SW1)

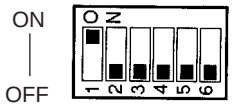

Pin	Item	Settings	
1	Control method	**ON**	Advanced PID
		OFF	ON/OFF
2	Control operation for loops 1 and 3	ON	Normal (cooling control)
		OFF	Reverse (heating control)
3	Control operation for loops 2 and 4	ON	Normal (cooling control)
		OFF	Reverse (heating control)
4	Temperature unit	ON	°F (See note 1.)
		OFF	°C
5	Data type	ON	4-digit BCD
		OFF	16-bit binary (4-digit Hex)
6	Leave this switch set to **OFF**.		

Note
1. Do not use this setting for platinum resistance thermometers; 0.01°F ranges are not supported.
2. The following ranges must be used when 4-digit BCD is specified:
   0.1°C/°F ranges: –99.9 (F999) to 999.9 (9999)
   0.01°C/°F ranges: –9.99 (F999) to 99.99 (9999)

Input Type DIP Switch (SW2)

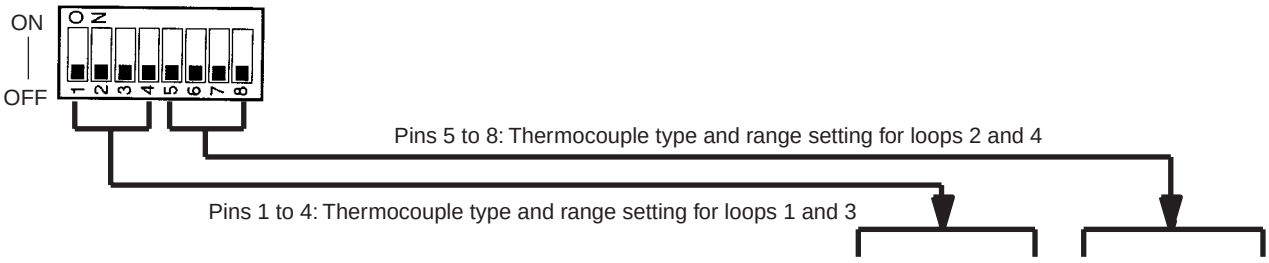

Code No.	Input type		Setting							
	Units for thermocouples (CQM1-TC20□)	Units for platinum resistance thermometers (CQM1-TC30□)	Loops 1 and 3				Loops 2 and 4			
			1	2	3	4	5	6	7	8
0	K, –200 to 1,300 °C	Pt100, –200.0 to 650.0 °C	❍	❍	❍	❍	❍	❍	❍	❍
1	K, 0.0 to 500.0 °C	JPt100, –200.0 to 650.0 °C	●	❍	❍	❍	●	❍	❍	❍
2	J, –100 to 850 °C	Pt100, –20.00 to 250.00 °C	❍	●	❍	❍	❍	●	❍	❍
3	J, 0.0 to 400.0 °C	JPt100, –20.00 to 250.00 °C	●	●	❍	❍	●	●	❍	❍
4	T, –200.0 to 400.0 °C	Do not set.	❍	❍	●	❍	❍	❍	●	❍
5	L, –100 to 850 °C	Do not set.	●	❍	●	❍	●	❍	●	❍
6	L, 0.0 to 400.0 °C	Do not set.	❍	●	●	❍	❍	●	●	❍
7	R, 0 to 1,700 °C	Do not set.	●	●	●	❍	●	●	●	❍
8	S, 0 to 1,700 °C	Do not set.	❍	❍	❍	●	❍	❍	❍	●
9	B, 100 to 1,800 °C	Do not set.	●	❍	❍	●	●	❍	❍	●

Note
1. ●: ON, ❍: OFF
2. All pins are turned OFF at the factory.
3. Do not use any settings that are not specified above.

Temperature Ranges

Units for Thermocouples

The setting ranges are shown in the following table. Indication ranges are the setting range ±20°C/°F. (See note 1.)

Code No.	Input type	°C		°F	
		Binary (4-digit Hex)	BCD	Binary (4-digit Hex)	BCD
0	K	FF38 to FFFF to 0514 (–200 to –1 to 1300)	F200 to 1300 (–200 to 1300)	FED4 to FFFF to 08FC (–300 to –1 to 2300)	F300 to 2300 (–300 to 2300)
1	K	0000 to 1388 (0.0 to 500.0)	0000 to 5000 (0.0 to 500.0)	0000 to 2328 (0.0 to 900.0)	0000 to 9000 (0.0 to 900.0)
2	J	FF9C to FFFF to 0352 (–100 to –1 to 850)	F100 to 0850 (–100 to 850)	FF9C to FFFF to 05DC (–100 to –1 to 1500)	F100 to 1500 (–100 to 1500)
3	J	0000 to 0FA0 (0.0 to 400.0)	0000 to 4000 (0.0 to 400.0)	0000 to 1D4C (0.0 to 750.0)	0000 to 7500 (0.0 to 750.0)
4	T	F830 to FFFF to 0FA0 (–200.0 to –0.1 to 400.0)	F999 to 4000 (See note 2.) (–99.9 to 400.0)	F448 to FFFF to 1B53 (–300.0 to –0.1 to 700.0)	F999 to 7000 (See note 2.) (–99.9 to 700.0)
5	L	FF9C to FFFF to 0352 (–100 to –1 to 850)	F100 to 0850 (–100 to 850)	FF9C to FFFF to 05DC (–100 to –1 to 1500)	F100 to 1500 (–100 to 1500)
6	L	0000 to 0FA0 (0.0 to 400.0)	0000 to 4000 (0.0 to 400.0)	0000 to 1D4C (0.0 to 750.0)	0000 to 7500 (0.0 to 750.0)
7	R	0000 to 06A4 (0 to 1700)	0000 to 1700 (0 to 1700)	0000 to 0BB8 (0 to 3000)	0000 to 3000 (0 to 3000)
8	S	0000 to 06A4 (0 to 1700)	0000 to 1700 (0 to 1700)	0000 to 0BB8 (0 to 3000)	0000 to 3000 (0 to 3000)
9	B (See note 3.)	0064 to 0708 (100 to 1800)	0100 to 1800 (100 to 1800)	012C to 0C80 (300 to 3200)	0300 to 3200 (300 to 3200)

Units for Platinum Resistance Thermometers

The setting ranges are shown in the following table. Indication ranges are the setting range ±20 °C/°F. (See note 1.)

Code No.	Input type	°C		°F	
		Binary (4-digit Hex)	BCD	Binary (4-digit Hex)	BCD
0	Pt100	F830 to FFFF to 1964 (–200.0 to –0.1 to 650.0)	F999 to 6500 (See note 2.) (–99.9 to 650.0)	F448 to FFFF to 2EE0 (–300.0 to –1 to 1200.0)	F999 to 9999 (See note 2.) (–99.9 to 999.9)
1	JPt100	F830 to FFFF to 1964 (–200.0 to –0.1 to 650.0)	F999 to 6500 (See note 2.) (–99.9 to 650.0)	F448 to FFFF to 2EE0 (–300.0 to –1 to 1200.0)	F999 to 9999 (See note 2.) (–99.9 to 999.9)
2	Pt100	F830 to FFFF to 61A8 (–20.00 to –0.01 to 250.00)	F999 to 9999 (See note 2.) (–9.99 to 99.99)	Do not set. (See note 4.)	
3	JPt100	F830 to FFFF to 61A8 (–20.00 to –0.01 to 250.00)	F999 to 9999 (See note 2.) (–9.99 to 99.99)		
4 to 9	---	Do not set. (See note 4.)			

Note

1. For binary indications, a sensor error (E400) will occur if the specified range is exceeded. In Auto Mode, the output for the corresponding loop will turn OFF if this error occurs.
2. For BCD indications, the indicated values will be clamped to the upper or lower limit between the upper or lower limit of the setting range and the values that will cause a sensor error (E400),
   0.1 °C/°F Indications: Lower limit = –99.9, Upper limit = 999.9
   0.01 °C Indications: Lower limit = –9.99, Upper limit = 99.99
3. The lower limit of indications for B thermocouples is 0 °C/°F.

4. Do not use any settings other than those specified above.
5. The set points and input shift values will change as follows if the input type is changed:
   - The set points will be clamped at the upper or lower limit if the setting range is exceeded.
   - The decimal points will be adjusted if the range is changed to another range with a different number of decimal places.
     Example: If pin 1 on SW2 is turned ON, the K thermocouple range will be changed from –200 to 1,300 °C to 0.0 to 500.0 °C. If a set point was previously 200 °C, it will be changed to 20.0 °C.

2-4 Terminology and Function Descriptions

Manual Manipulated Variable

The manual manipulated variable can be used only as a time-proportional ratio. Control is continued based on the final output level when automatic control (ON/OFF or advanced PID) is switched to manual operation. This function enables the output to be controlled artificially without using RUN or STOP commands or altering the input status (e.g., for sensor errors). An example of application is shown below.

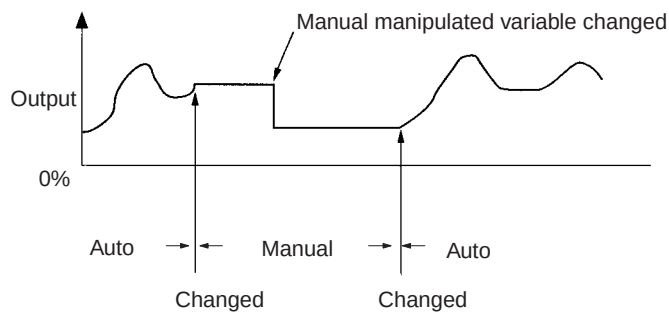

Heater Burnout Alarm

- The heater burnout alarm output is a latched output. To reset the heater burnout alarm output, either set the heater burnout alarm set value to 0.0 or turn the power supply to the Unit OFF and then back ON.
- The heater burnout alarm settings are shown in the following table.

Setting	Operation
0.0	Heater burnouts will not be detected. The heater burnout alarm output will turn OFF. This setting is used to reset an alarm.
0.1 to 49.9	The detection level for heater burnout alarms.
50.0	Heater burnouts will not be detected. The heater burnout alarm output will turn ON regardless of RUN/STOP status. This setting can be used to check wiring.

- Heater Current
  If the heater current reaches 55.0 A or higher, a CT input error will occur and E500 will be output if the heater current is being monitored.
- The current at which a heater burnout will be detected is calculated as follows:

  Set value = (Normal current + current after burnout)/2
- The following condition must be met:

  Normal current – current after burnout ≥ 2.5 A

Measurements will not be stable if the difference is less than 2.5 A. If the difference is less than 2.5 A, wrap the wire around the CT two or three times to increase the measured current. The heater current monitor function can be used to measure the currents. Actual values can vary from calculated values.

Input Shift Value

- An input shift value can be set to offset the indicated value from the actual measured value. For example, if the input shift value is set to 3.0 °C and the actual measured temperature is 50 °C, the monitored temperature will be 53 °C.
- If the input shift value is set too large, a sensor error can occur near the upper and lower limits of the temperature range even though the measure temperature is still within range.

Autotuning (AT)

PID calculations using the limit cycle method are performed when autotuning is executed. Parameters cannot be written for loops that are currently being autotuned.

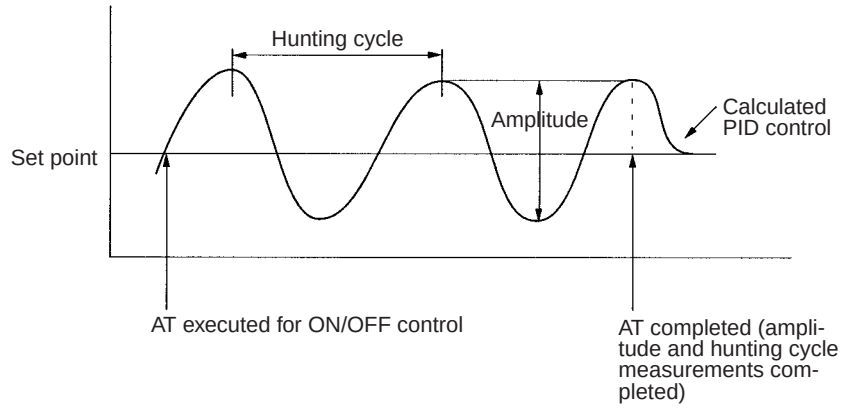

- The limit cycle method causes hunting using ON/OFF control near the set point to measure the hunting cycle and amplitude and uses the results to make calculations for PID control.
- Be sure to change the START AT command in the output word after the START AT command has been sent and received. If the START AT command is left set in the output word, autotuning will be executed again as soon as it is completed.

2-5 Wiring

Wiring

Units for Thermocouples

CQM1-TC201 (4 loops, NPN outputs)

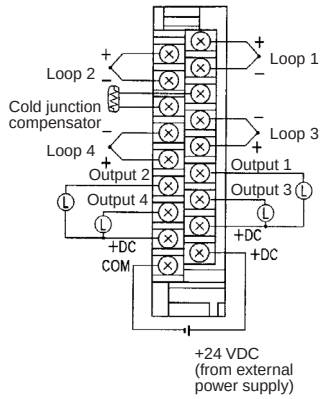

CQM1-TC202 (4 loops, PNP outputs)

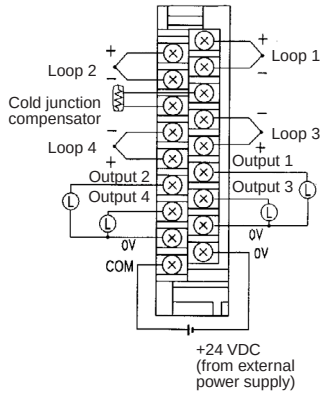

CQM1-TC203 (2 loops, heater burnout alarm NPN outputs)

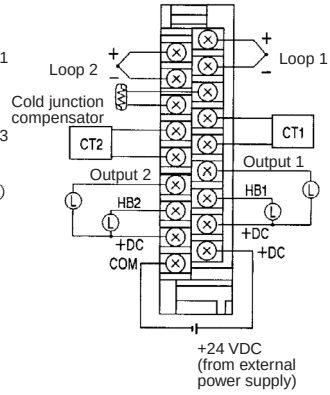

CQM1-TC204 (2 loops, heater burnout alarm PNP outputs)

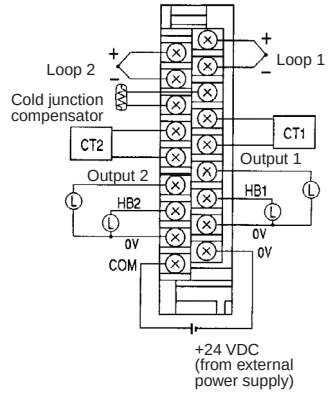

- Do not touch or remove the cold junction compensator.
- The sensor must be of the type set on the input type DIP switch.

Units for Platinum Resistance Thermometers

CQM1-TC301 (4 loops, NPN outputs)

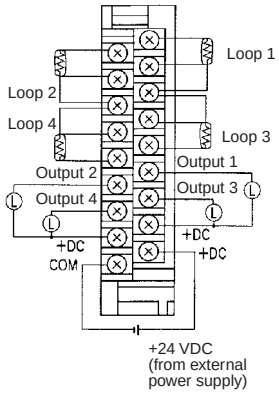

CQM1-TC302 (4 loops, PNP outputs)

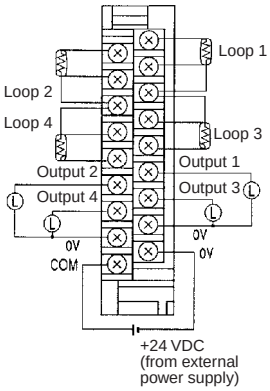

CQM1-TC303 (2 loops, heater burnout alarm NPN outputs)

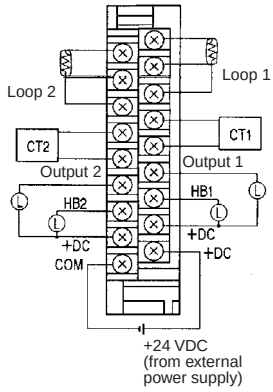

CQM1-TC304 (2 loops, heater burnout alarm PNP outputs)

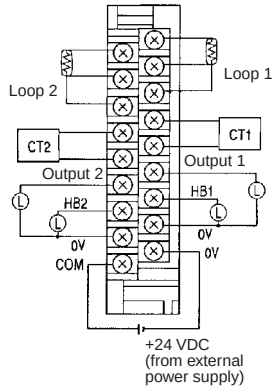

- The +DC terminals for NPN outputs are internally connected.
- The 0V terminals for NPN outputs are internally connected.

Crimp Terminals

Use M3 crimp connectors and tighten terminal screws to a torque of 0.3 to 0.5 N•m

Current Detectors (E54-CT1/CT3)

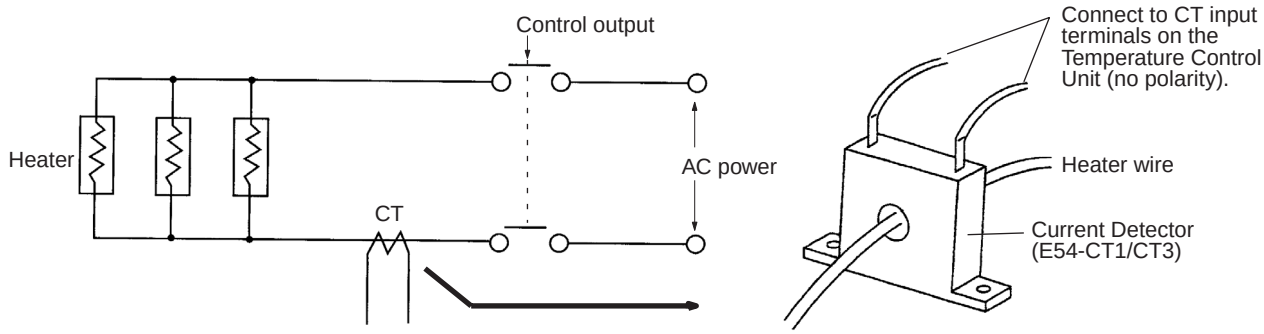

Output Interface

Output Characteristics

Maximum switching capability	100 mA, 24 VDC $^{+10\%}/_{-15\%}$
Leakage current	0.1 mA max.
Residual voltage	0.8 V max.
External supply voltage	30 mA min., 24 VDC $^{+10\%}/_{-15\%}$ (excluding load current)

Built-in Short-circuit Protection Circuit

When the short-circuit protection circuit operates, turn OFF the output or the output power supply, or release the short circuit.

Output Circuits

TC□01/TC□03

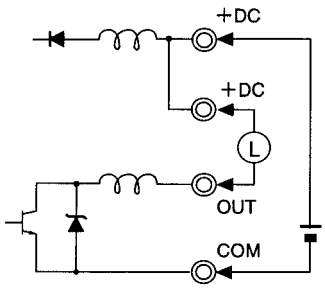

TC□02/TC□04

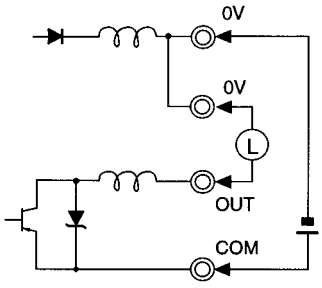

- The +DC terminals for NPN outputs are internally connected.
- The 0V terminals for NPN outputs are internally connected.
- Heater burnout alarm outputs (HB1 and HB2) are latched outputs, i.e., they will not reset by themselves.

2-6 Application

The Unit will be in Auto Mode in STOP status when the power supply is turned ON. An operation control command must be executed to start actual operation. Refer to *2-6-2 Using Operation Control Commands* for details on the commands.

2-6-1 Communications Procedure

The following diagram illustrates the procedures used to set parameters, monitor data, and read data.

Note No commands are set at startup.

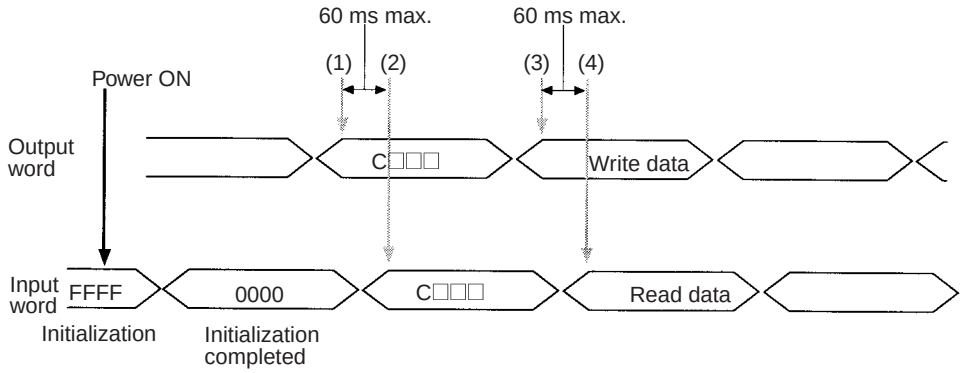

1,2,3...

1. Output word: An I/O allocation command (C□□□) is set to specify the loop and the items to be set and monitored.
2. Input word: The I/O allocation command set in the output word will be set by the system as a "Command Acknowledged Flag" to indicate that the command has been acknowledged.
3. Output word: The write data for the I/O allocation command set in 1. is set.
4. Input word: After the data specified in 3. has been set, the data specified to be monitored in 1. will be set by the system. This also functions as a "Write Completed Flag" to indicate that the write operation has been completed.

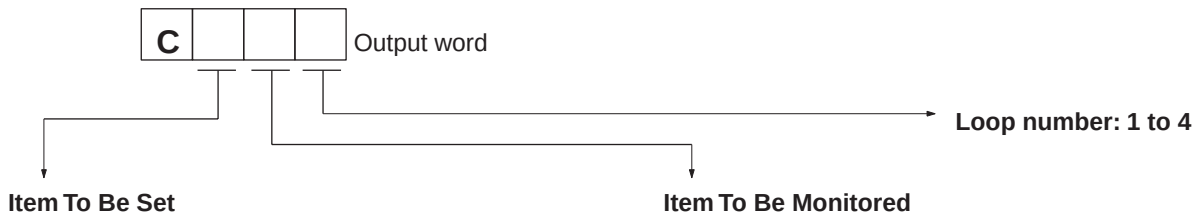

Value	Item to be set	Value	Item to be monitored
0	Set point	0	Set point
1	Proportional band (for advanced PID)	1	Proportional band (for advanced PID)
2	Integral time (for advanced PID)	2	Integral time (for advanced PID)
3	Derivative time (for advanced PID)	3	Derivative time (for advanced PID)
4	Hysteresis (for ON/OFF control)	4	Hysteresis (for ON/OFF control)
5	Control cycle (for advanced PID or manual control)	5	Control cycle (for advanced PID or manual control)
6	Input shift value	6	Input shift value
7	No item set (See note 2.)	7	Process value
8	Manual manipulated variable	8	Manipulated variable
9	Do not set.	9	Status
A	Heater burnout alarm setting (only for models with heater burnout alarms)	A	Heater burnout alarm setting (only for models with heater burnout alarms)
B	Do not set.	B	Heater current (only for models with heater burnout alarms)

Note
1. A setting error will be indicated by outputting EE01 to the input word if any values other than those listed above are specified. Reset the contents of the output word if an error occurs.
2. When there is no item to set, set C7□□ into the output word and then use 0000 as the write data.
3. If the write data is set before the response confirming acknowledgement of the I/O allocation command has been received, the set value will be used for the previous I/O allocation command. Always confirm that the I/O allocation command has been acknowledged before setting the write data.

Setting and Indication Ranges for Setting and Monitor Items

Decimal values are given in parentheses.

Setting/Monitor item		Binary indications		BCD indications		Unit	Memory
		Range	Default	Range	Default		
Set point		Depends on input type. (See page 250.)	0000	Depends on input type. (See page 250.)	0000	°C/°F	Written to RAM (transferred to EEPROM via CEEA command).
Proportional band		0001 to 270F (0.1 to 999.9)	0190 (40.0)	0001 to 9999 (0.1 to 999.9)	0400 (40.0)	°C/°F	Written to EEPROM. (See note 2.) Write life: 100,000 writes (See note 3.)
Integral time		0000 to 0F9F (0 to 3999)	00F0 (240)	0000 to 3999 (0 to 3999)	0240 (240)	s	
Derivative time		0000 to 0F9F (0 to 3999)	0028 (40)	0000 to 3999 (0 to 3999)	0040 (40)	s	
Hysteresis		0001 to 270F (0.1 to 999.9)	0008 (0.8)	0001 to 9999 (0.1 to 999.9)	0008 (0.8)	°C/°F	
Control cycle		0001 to 0063 (1 to 99)	0014 (20)	0001 to 0099 (1 to 99)	0020 (20)	s	
Input shift value	Platinum resistance thermometers in 0.01° ranges	FC19 to 270F (–9.99 to 99.99)	0000 (0.00)	F999 to 9999 (–9.99 to 99.99)	0000 (0.00)	°C	
	Others (See note 4.)	FC19 to 270F (–99.9 to 999.9)	0000 (0.00)	F999 to 9999 (–99.9 to 999.9)	0000 (0.00)	°C/°F	
Heater burnout alarm setting (See note 5.)		0000 to 01F4 (0.0 to 50.0)	0000 (0.0)	0000 to 0500 (0.0 to 50.0)	0000 (0.0)	A	
Manual manipulated variable		0000 to 03E8 (0.0 to 100.0)	See note 7.	0000 to 1000 (0.0 to 100.0)	See note 7.	%	Stored in RAM
Process value		Depends on input type.	---	Depends on input type.	---	°C/°F	
Manipulated variable (See note 6.)		0000 to 03E8 (0.0 to 100.0)	---	0000 to 1000 (0.0 to 100.0)	---	%	
Heater current		0000 to 0226 (0.0 to 55.0) F500 (55.0 min.)	---	0000 to 0550 (0.0 to 55.0) E500 (55.0 min.)	---	A	

Note
1. A setting error will be indicated by outputting EE01 to the input word if any values other than those listed above are specified. The setting will be invalid.
2. Automatically written to EEPROM when the parameter setting is changed.
3. Set up the system to ensure that EEPROM is not written to more than 100,000 times.
4. The decimal point will be adjusted if the range is changed to another range with a different number of decimal places. Adjust the setting as necessary after changing ranges. (Example: If a 0.01 °C range is changed to a 0.1 °C

range and the input shift value was 0.05 °C, the setting would be changed to 0.5

5. Heater burnout detection will not be performed if the alarm setting is 0.0 or 50 A. The heater burnout alarm output will turn OFF if the setting is changed to 0.0 A and will turn ON if the setting is changed to 50 A.
6. The current manipulated variable will be monitored.
7. The initial manual manipulated variable will be set to maintain the output level before Manual Mode was entered.
8. Always check the “Write Completed Flag” to be sure that the write to EEPROM has been completed when setting a parameter that is stored in EEPROM. A minimum of 60 ms is required to complete writing to EEPROM. If a power interruption or other problem prevents confirming the write operation, reset the value after power is restored or the problem corrected.

Status Data

Units with Four Loops

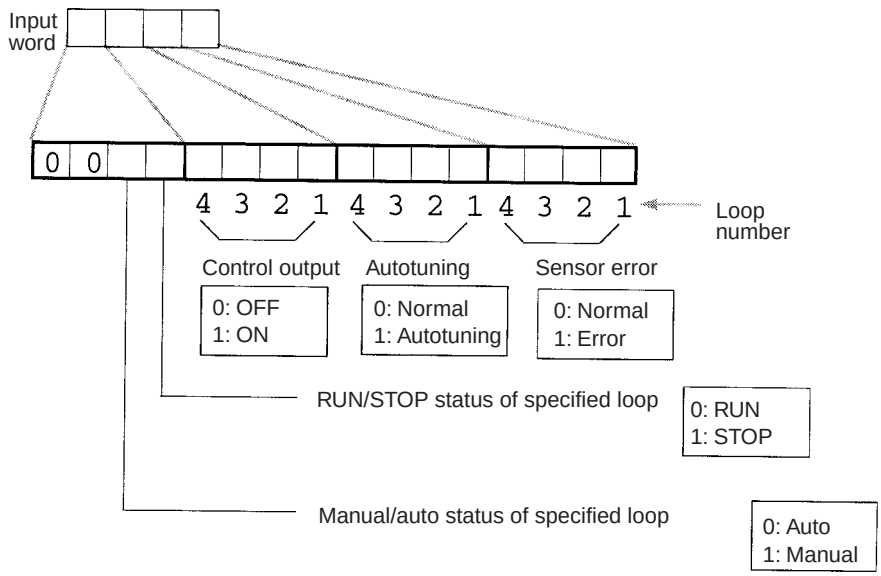

Units with Two Loops and Heater Burnout alarms

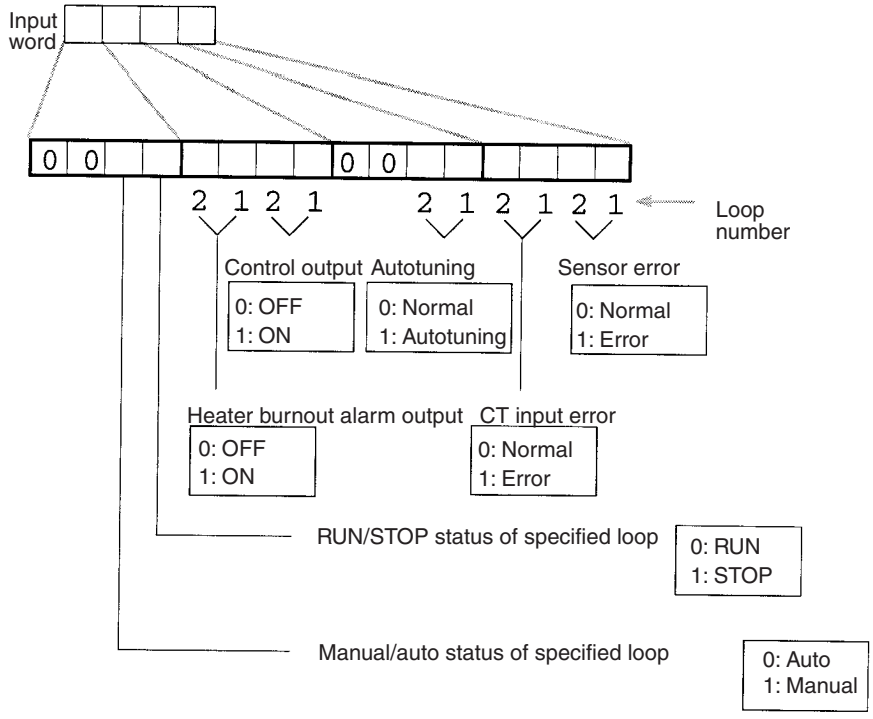

Note The RUN/STOP and manual/auto status will be given for the loop specified in the I/O allocation command.

2-6-2 Using Operation Control Commands

The following procedure is used to control the Unit.

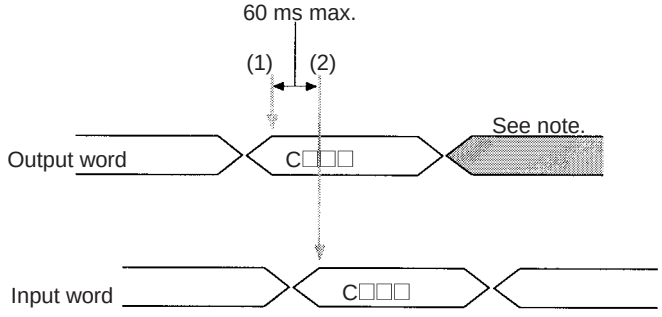

1,2,3...

1. Output word: An operation control command (C□□□□) is set to specify the loop and the operation.
2. Input word: The operation control command set in the output word will be set as a “Command Acknowledged Flag” to indicate that the command has been acknowledged.

Note The value set by the previous command will be valid as soon as the next command is acknowledged.

Operation Control Commands

Command (Set in output word; see notes 1 and 2.)	Operation	Validity (See note 3.)
CCC□ (□ = 1 to 4 or A)	STOP	Always (STOP/RUN in Auto Mode)
CCD□ (□ = 1 to 4 or A)	RUN	
CDC□ (□ = 1 to 4 or A)	Manual Mode (See note 4.)	Not valid during autotuning.
CDD□ (□ = 1 to 4 or A)	Auto Mode	
CFC□ (□ = 1 to 4 or A)	Autotuning (See note 5.)	PID control (Not valid during Manual Mode or STOP.)
CFD□ (□ = 1 to 4 or A)	Cancel autotuning	PID control
CEEA (See note 6.)	Writing set point to EEPROM	Always

Note 1. The Unit will start in Auto Mode in STOP status when power is turned ON.

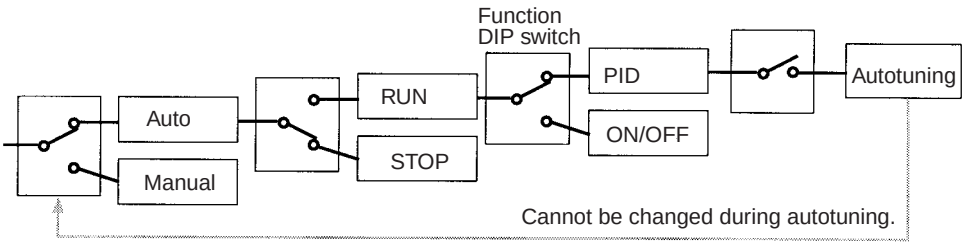

2. Input the loop number for □ in the command codes. “A” is used to indicate all loops. When “A” is used, the operation control command will not be executed for any loops if even one of the four loops does not meet the write conditions. For example, a setting error will occur (EE01) if the AUTOTUNING command is set when loops 1 to 3 are in RUN status and loop 4 is in STOP status.
3. The following table shows the conditions required to execute the operation control commands and the error codes that will occur when the command causes an error.

Current status				RUN CCD□	STOP CCC□	Auto Mode CDD□	Manual Mode CDC□	AT CFC□	Cancel AT CFD□	Write SP CEEA	I/O allocation commands C□□□	Write	Read
Auto Mode	RUN	PID	AT	❍	❍	EE00	EE00	❍	❍	❍	❍	EE00	❍
			Not AT	❍	❍	❍	❍	❍	❍	❍	❍	❍	❍
		ON/OFF		❍	❍	❍	❍	EE01	EE01	❍	❍	❍	❍
	STOP			❍	❍	❍	❍	EE01	EE01	❍	❍	❍	❍
Manual Mode				❍	❍	❍	❍	EE01	EE01	❍	❍	❍	❍

❍ = Command valid

Errors: EE00 = Parameter change attempted during autotuning.

EE01 = Setting error

When “A” is used to specify all loops, the command will not be executed for any loops if even one of the four loops does not meet execution conditions.

4. During manual operation, the manual manipulated variable will be output regardless of RUN/STOP status.

5. Parameters cannot be written and Manual Mode cannot be specified for loops for which autotuning is being executed. An error response (EE00) will be written to the input word if an attempt to do so is made.

   After confirming acknowledgement of the autotuning command, change the command code to an I/O allocation command other than one to set PID parameters, e.g., a read–only command (C7□□).

   - If the autotuning command is left in the output word, autotuning will be repeated as soon as it has been completed.
   - After the autotuning command has been acknowledged, the setting for the I/O allocation command just prior to the operation control command will be valid for the output word. The following is an example of this.

   a) An I/O allocation command is written to the output word to set the proportional band.

   b) The autotuning command is executed and command reception acknowledged.

   c) The set value for the proportion band (50.0) is written to the output word. Although autotuning will set the PID parameters according to autotuning results, here the value will be immediately changed to 50.0 as a result of the I/O allocation command set before autotuning.

6. The set point will be written to EEPROM when the CEEA command is executed. The set point may not be written correctly if power is interrupted during the write operation. At least 60 ms is required to complete the write operation after the CEEA command is executed. Always be sure to confirm the Command Acknowledgment Flag in the input word when writing the set point to EEPROM.

Executing Commands from a Programming Console

The following words are allocated to the Temperature Control Unit in these examples:

Input word = IR 001
Output word = IR 100

I/O Allocation Commands

The following procedure would be used to write a set point of 100 °C for loop 1 and then monitor the process value for loop 1.

1,2,3...

1. Start by monitoring IR 001 and IR 100 on the Programming Console.

```
c100 c001
0000 0000
```

2. Write “C071” to the output word to specify setting the set point and reading the process value.

   “C071” will be written to the input word to acknowledge the command.

```
c100 c001
C071 C071
```

3. Write the set point for loop 1 (100 °C) to the output word.

   The process value for loop 1 will be written to the input word, indicating that the write operation has been completed.

```
c100 c001
0100 0025
```

Note If the contents of IR 100 are left unchanged, the process value in IR 001 will be updated every 500 ms.

Operation Control Commands

The following procedure would be used to switch to RUN status for all loops.

1,2,3...

1. Start by monitoring IR 001 and IR 1000 on the Programming Console.

```
c100 c001
0000 0000
```

```
c100 c001
0000 0000
```

2. Write “CCDA” to the output word to specify RUN status for all loops.
   “CCDA” will be written to the input word to acknowledge the command.

```
c100 c001
CCDA CCDA
```

2-7 IOTC(––)

The IOTC(– –) instruction is supported by CX-Programmer version 2.0 or later and CPU Unit lot number 0160 or later. The SYSMAC Support Software can also be used by uploading the expansion instructions from a CPU Unit with a lot number of 0160 or later.

2-7-1 Sending I/O Allocation Commands

IOTC(—) can be used to set, write, or monitor more than one data item at the same time, simplifying the ladder program.

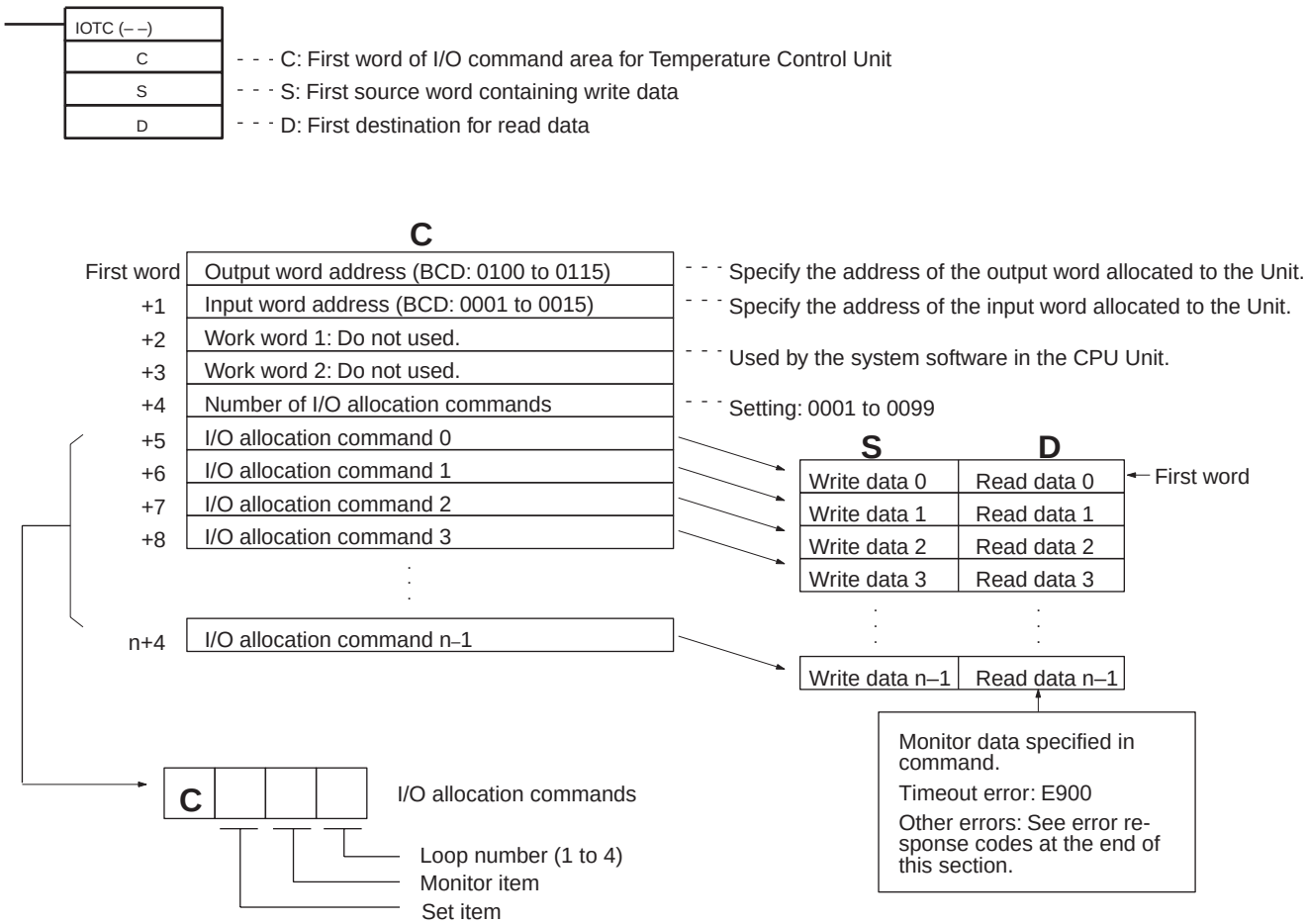

Note

1. Do not execute a macro instruction for the same Unit until execution of any previously executed macro instructions has been completed. Data may not be set correctly if more than one instruction is executed at the same time.
2. The same IOTC(—) instruction will not be executed again until the input condition has turned OFF for at least one scan. Also, if the input condition turns OFF and then back ON before execution has been completed, the instruction will be executed again from the beginning.
3. Refer to *2-6-1 Communications Procedure* for setting and monitor items and ranges.
4. Up to a maximum of 120 ms will be required to complete each I/O allocation command for a normal response (timeout error: 200 ms). The total time to complete all commands will be a maximum of (0.12 s x refresh time x 2) x the number of commands.

Operand Data Ranges

Area	C	S	D
IR or SR	000 to 247	000 to 255	000 to 252
HR	HR 00 to HR 94	HR 00 to HR 99	HR 00 to HR 99
AR	AR 00 to AR 22	AR 00 to AR 27	AR 00 to AR 27
LF	LR 00 to LR 58	LR 00 to LR 63	LR 00 to LR 63
Timer/ Counter	---	TIM/CNT 000 to 511	---
DM	DM 0000 to DM 6138	DM 0000 to DM 6655	DM 0000 to DM 6143
EM	EM 0000 to EM 6138	EM 0000 to EM 6143	EM 0000 to EM 6143
Indirectly addressed DM	*DM 0000 to *DM 6655		
Indirectly addressed EM	*EM 0000 to *EM 6143		
Constants	---	*0000 to FFFF	---

Note
1. Be sure that the above ranges are not exceeded by the number of words required for n commands.
2. If there are errors in the operand or word address specifications, the ER Flag will turn ON and the instruction will not be executed.

Flags

SR 25503 (ER Flag)	ON for error in operands or word addresses. ON if the specified number of commands causes a memory area boundary to be exceeded.
SR 25506 (Equals Flag)	ON when all commands have been acknowledged. If a setting range error (EE01) occurs for an item being set or a timeout error (E900) occurs for an I/O allocation command, the settings will not be written. Be sure to check the read data to confirm execution.

Note Operation control commands can be set along with I/O allocation commands. If an operation control command is set, set the same write data for the operation control command as was set for the I/O allocation command just prior to it.

2-7-2 Sending Operation Control Commands

IOTC(—) can be used to send a single operation control command, simplifying the ladder program.

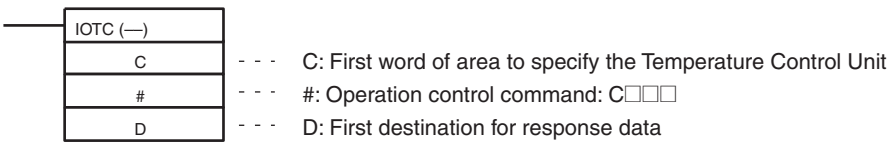

C

First word	Output word address (BCD: 0100 to 0115)	Specify the address of the output word allocated to the Unit.
+1	Input word address (BCD: 0001 to 0015)	Specify the address of the input word allocated to the Unit.
+2	Work word 1: Do not use.	Used by the system software in the CPU Unit.
+3	Work word 2: Do not use.	

Operation Control Commands

Command (Set in output word.)	Operation
CCC□ (□ = 1 to 4 or A)	STOP
CCD□ (□ = 1 to 4 or A)	RUN
CDC□ (□ = 1 to 4 or A)	Manual Mode
CDD□ (□ = 1 to 4 or A)	Auto Mode
CFC□ (□ = 1 to 4 or A)	Autotuning
CFD□ (□ = 1 to 4 or A)	Cancel autotuning
CEEA	Writing set point to EEPROM

Note Refer to page 259 for details.

	D
Specified word	Input data - - - - Response to operation control command

Operand Data Ranges

Area	C	D
IR or SR	000 to 250	000 to 252
HR	HR 00 to HR 97	HR 00 to HR 99
AR	AR 00 to AR 25	AR 00 to AR 27
LF	LR 00 to LR 61	LR 00 to LR 63
DM	DM 0000 to DM 6141	DM 0000 to DM 6143
EM	EM 0000 to EM 6141	EM 0000 to EM 6143
Indirectly addressed DM	*DM 0000 to *DM 6155	
Indirectly addressed EM	*EM 0000 to *EM 6143	

Note If there are errors in the operand or word address specifications, the ER Flag will turn ON and the instruction will not be executed.

Flags

SR 25503 (ER Flag)	ON for error in operands or word addresses. ON if the a memory area boundary is exceeded.
SR 25506 (Equals Flag)	ON when command has been acknowledged.

Sample Program 1

The IOTC(—) instruction can be used with a CQM1H CPU Unit with a lot number of 0160 or later.

Switch Settings

The following switch settings are used.

Function DIP switch (SW1):

Pins 1 and 5 turned ON = PID heating control , °C unit, 4-digit BCD

Input type DIP switch (SW2):

Pins 1 and 5 turned ON = Thermocouples, 0.0 and 500.0 °C, loops 1 to 4

Operations

A) Power supply turned ON (STOP status, initialization).

B) Set point for loop 2 set to 100.0 °C and control period changed from 20 s (default setting) to 5 s.

C) Autotuning executed for loop 2 after RUN started.

D) RUN started and process values monitored for all loops after autotuning for loop 2 completed.

Word Allocations

The following words are allocated to the Temperature Control Unit.
Input word: IR 001
Output word: IR 100

(1) Data for Changing the Set Point and Control Period

C	
Word	**Contents**
DM 0000	0100 (Output word)
DM 0001	0001 (Input word)
DM 0002	0000 (Not used)
DM 0003	0000 (Not used)
DM 0004	0002 (Number of I/O allocation commands)
DM 0005	C072 (C0: Set point 7: Process value 2: Loop)
DM 0006	C592 (C5: Control period 9: Status 2: Loop)

S	
Word	**Setting**
DM 0100	1000 (Set point: 100°C)
DM 0101	5 (Control period: 5 s)

D	
Word	**Monitor**
DM 0200	Process value
DM 0201	Status

When setting several loops, increase the number of commands in DM0004 and set them in order from DM0005.

(2) Operation Control Commands

DM 0007	0100 (Output word)
DM 0008	0001 (Input word)
DM 0009	0000 (Not used)
DM 0010	0000 (Not used)

	S	
	Command	**Meaning**
(2)-1	#CCD2	CCD: RUN 2: Loop
(2)-2	#CFC2	CFC: AT 2: Loop
(2)-3	#CCDA	CCD: RUN A: All loops

D	
Word	**Response**
DM 0202	2 loops RUN
DM 0203	2 loops AT
DM 0204	All loops RUN

(3) Monitoring Process Values

DM 0011	0100 (Output word)
DM 0012	0001 (Input word)
DM 0013	0000 (Not used)
DM 0014	0000 (Not used)
DM 0015	0004 (Number of I/O allocation commands)
DM 0016	C771 (C7: Read 7: Process value 1: Loop)
DM 0017	C772 (C7: Read 7: Process value 2: Loop)
DM 0018	C773 (C7: Read 7: Process value 3: Loop)
DM 0019	C774 (C7: Read 7: Process value 4: Loop)

S	
Word	**Setting**
DM 0102	0000 (For read: 0)
DM 0103	0000 (For read: 0)
DM 0104	0000 (For read: 0)
DM 0105	0000 (For read: 0)

D	
Word	**Monitor**
DM 0205	Loop 1 process value
DM 0206	Loop 2 process value
DM 0207	Loop 3 process value
DM 0208	Loop 4 process value

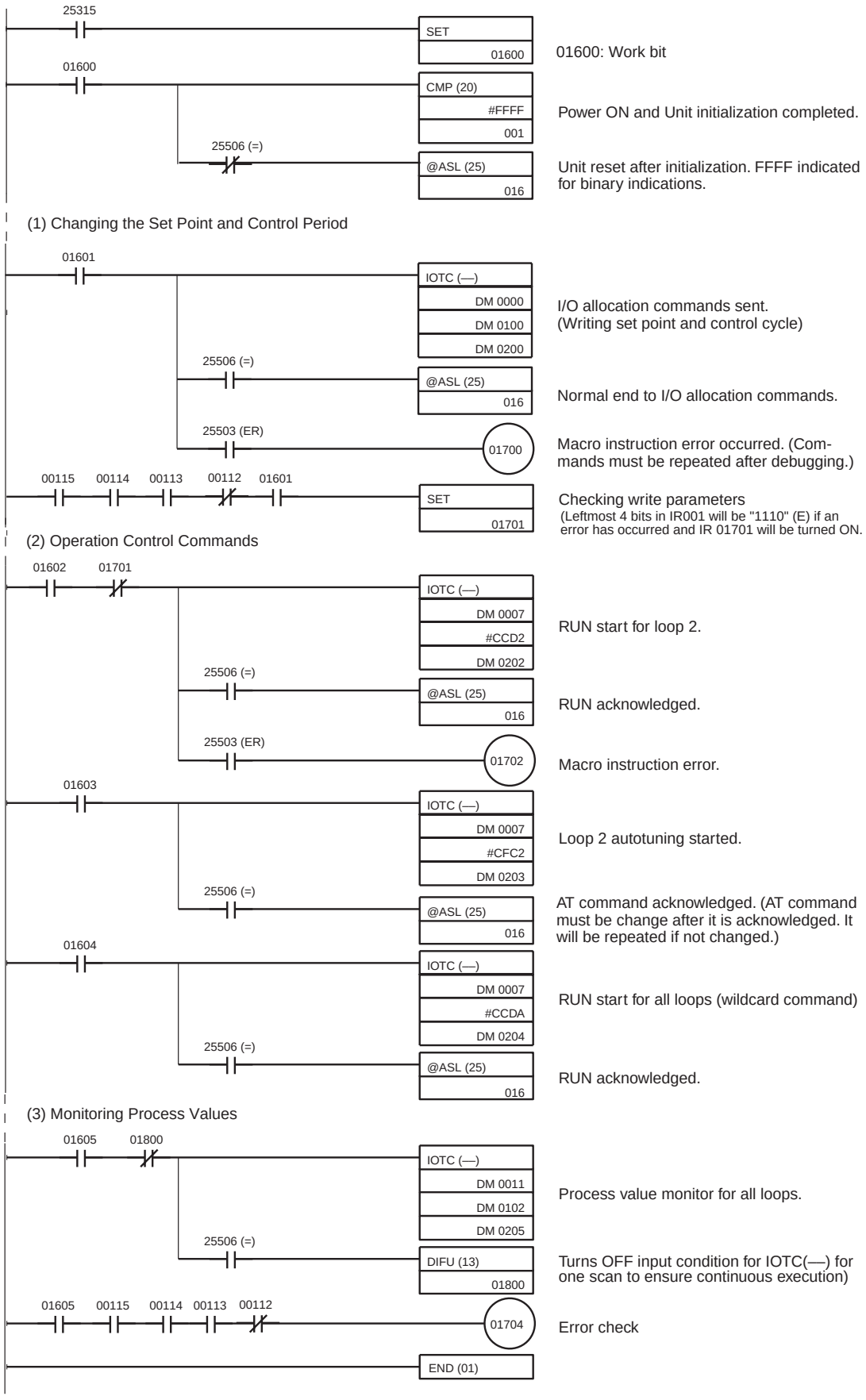
25315
SET
01600
01600: Work bit
01600
CMP (20)
#FFFF
001
Power ON and Unit initialization completed.
25506 (=)
@ASL (25)
016
Unit reset after initialization. FFFF indicated for binary indications.
(1) Changing the Set Point and Control Period
01601
IOTC (—)
DM 0000
DM 0100
DM 0200
I/O allocation commands sent. (Writing set point and control cycle)
25506 (=)
@ASL (25)
016
Normal end to I/O allocation commands.
25503 (ER)
01700
Macro instruction error occurred. (Commands must be repeated after debugging.)
00115 00114 00113 00112 01601
SET
01701
Checking write parameters
(Leftmost 4 bits in IR001 will be "1110" (E) if an error has occurred and IR 01701 will be turned ON.
(2) Operation Control Commands
01602 01701
IOTC (—)
DM 0007
#CCD2
DM 0202
RUN start for loop 2.
25506 (=)
@ASL (25)
016
RUN acknowledged.
25503 (ER)
01702
Macro instruction error.
01603
IOTC (—)
DM 0007
#CFC2
DM 0203
Loop 2 autotuning started.
25506 (=)
@ASL (25)
016
AT command acknowledged. (AT command must be change after it is acknowledged. It will be repeated if not changed.)
01604
IOTC (—)
DM 0007
#CCDA
DM 0204
RUN start for all loops (wildcard command)
25506 (=)
@ASL (25)
016
RUN acknowledged.
(3) Monitoring Process Values
01605 01800
IOTC (—)
DM 0011
DM 0102
DM 0205
Process value monitor for all loops.
25506 (=)
DIFU (13)
01800
Turns OFF input condition for IOTC(—) for one scan to ensure continuous execution)
01605 00115 00114 00113 00112
01704
Error check
END (01)

Sample Program 2

The IOTC(—) instruction cannot be used with a CQM1H CPU Unit with a lot number earlier than 0160.

Switch Settings

The following switch settings are used.

Function DIP switch (SW1):

Pins 1 and 5 turned ON = PID heating control , °C unit, 4-digit BCD

Input type DIP switch (SW2):

Pins 1 and 5 turned ON = Thermocouples, 0.0 and 500.0 °C, loops 1 to 4

Operations

For loop 1: Power supply turned ON (STOP status, initialization), set point for set to 100.0 °C, control started (RUN), and then process value monitored.

Word Allocations

The following words are allocated to the Temperature Control Unit or used in programming.

Input word:	IR 001
Output word:	IR 100
Loop 1 process value:	DM 0010
Startup error check:	IR 01700

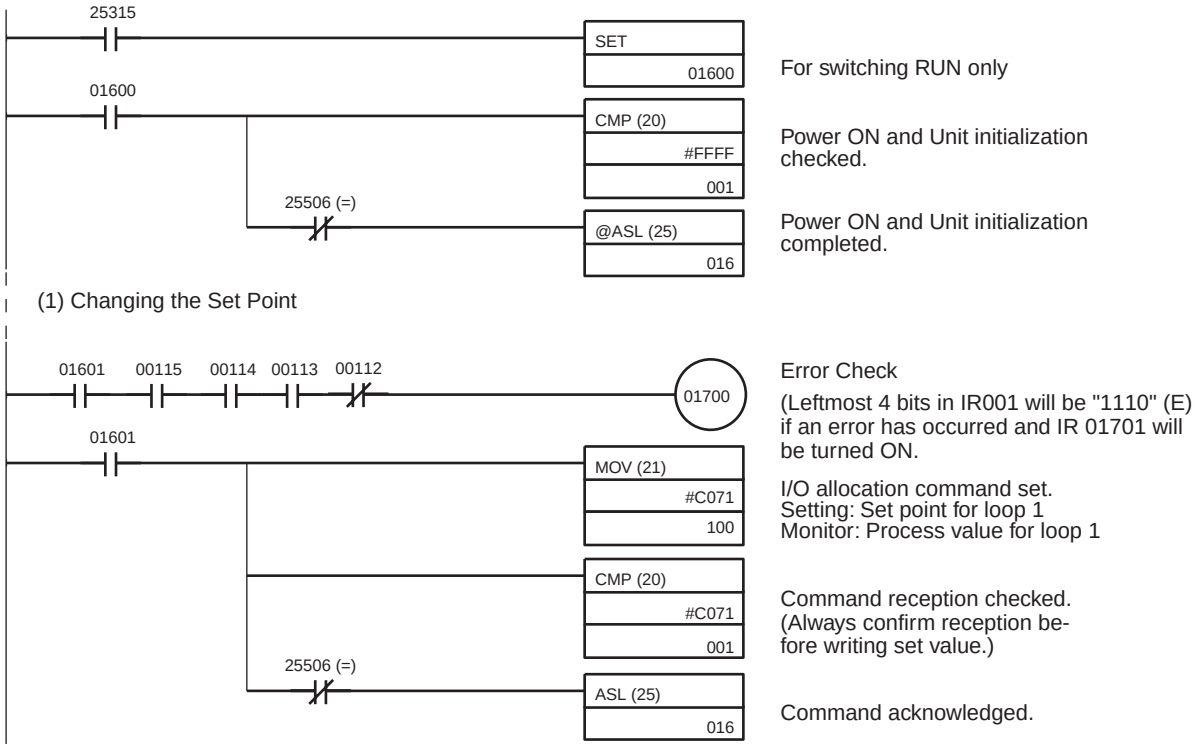

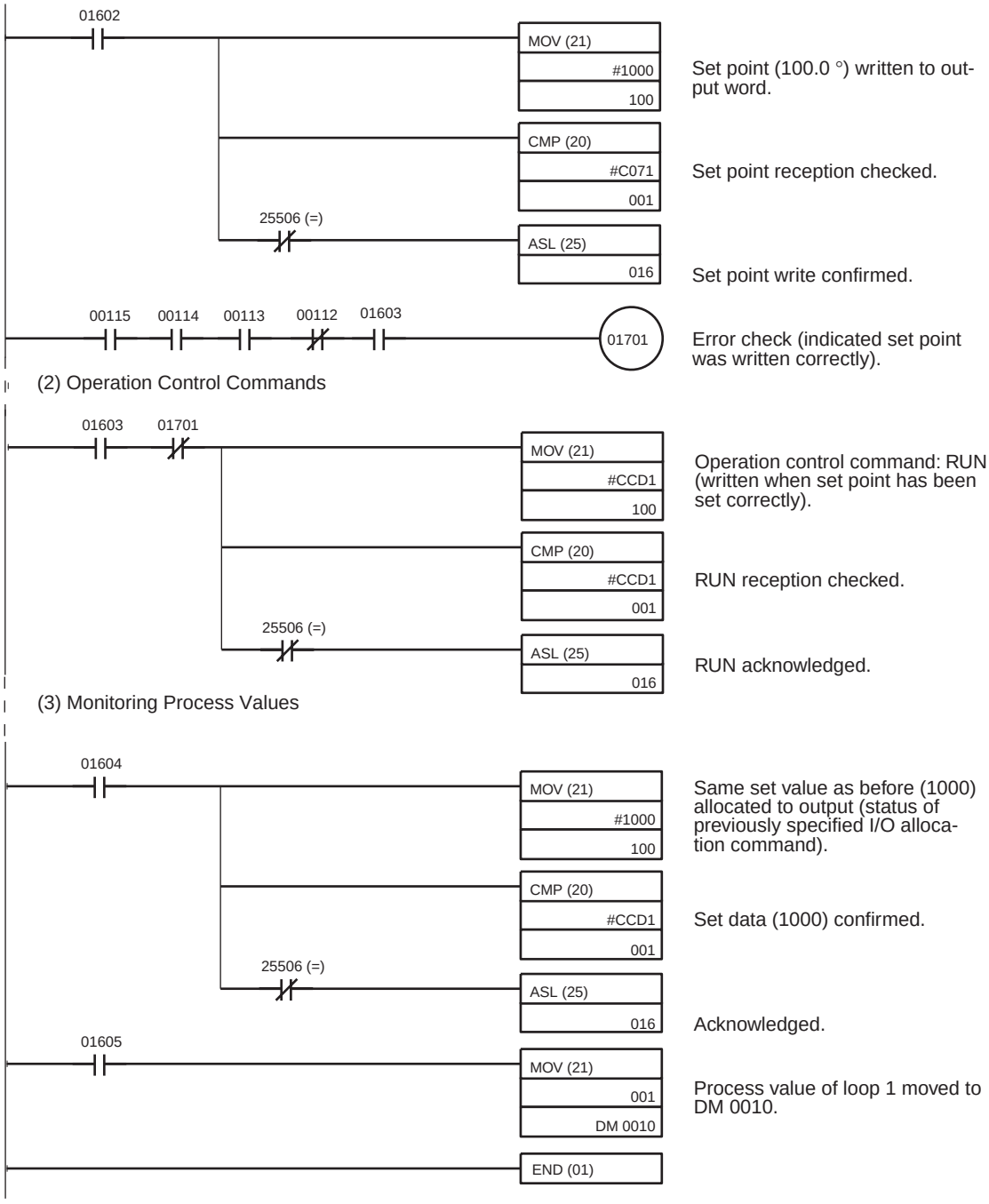
01602
MOV (21)
#1000
100
Set point (100.0 °) written to output word.
CMP (20)
#C071
001
Set point reception checked.
25506 (=)
ASL (25)
016
Set point write confirmed.
00115
00114
00113
00112
01603
01701
Error check (indicated set point was written correctly).
(2) Operation Control Commands
01603
01701
MOV (21)
#CCD1
100
Operation control command: RUN (written when set point has been set correctly).
CMP (20)
#CCD1
001
RUN reception checked.
25506 (=)
ASL (25)
016
RUN acknowledged.
(3) Monitoring Process Values
01604
MOV (21)
#1000
100
Same set value as before (1000) allocated to output (status of previously specified I/O allocation command).
CMP (20)
#CCD1
001
Set data (1000) confirmed.
25506 (=)
ASL (25)
016
Acknowledged.
01605
MOV (21)
001
DM 0010
Process value of loop 1 moved to DM 0010.
END (01)

2-8 Troubleshooting

Error		Control output	Remedy
Watchdog timer error	“EEEE” set in input word.	OFF for all outputs.	Turn the power supply OFF and then back ON. If the error persists, replace the Unit.
RAM read/write error	“E100” set in input word.		
EEPROM error	“E120” set in input word.		
Parameter change during autotuning	“EE00” set in input word.	Normal operation will continue.	Set parameter after autotuning has been completed.
Setting range error	“EE01” set in input word.		Reset the setting to within the proper range.
Sensor error	“E400” set in input word when process value is monitored for a loop.	Auto Mode: OFF for control loop with error. Manual Mode: Operation will continue with manual output level.	Check the connections to the input sensor and cold junction compensator. Check the sensor for broken or shorted wiring. Check the sensor connections to be sure they have not been reversed. Be sure the correct sensor and compensating lead are connected. Be sure the input temperature range has not been exceeded. Check the cold junction compensator to be sure it is connected properly. Be sure the sensor and input type settings agree. Be sure the input type DIP switch and the function DIP switch settings are correct.
CT input error	“E500” set in input word when heater current is monitored for a loop.	The heater burnout alarm output will maintain the same status as before the CT input error.	The current is 55 A or higher. Reduce the heater current to below 55 A.
Timeout error (for IOTC(—) instruction)	“E900” is output to the destination word (D) for the IOTC(—) instruction.	Normal operation will continue.	The set value for the I/O allocation command will not have been written. Repeat the setting.

Error Priority

The error code with the highest priority will be set then more than one error occurs at the same time. The errors are given in order of priority in the above table.

2-9 Command Tables

I/O Allocation Commands

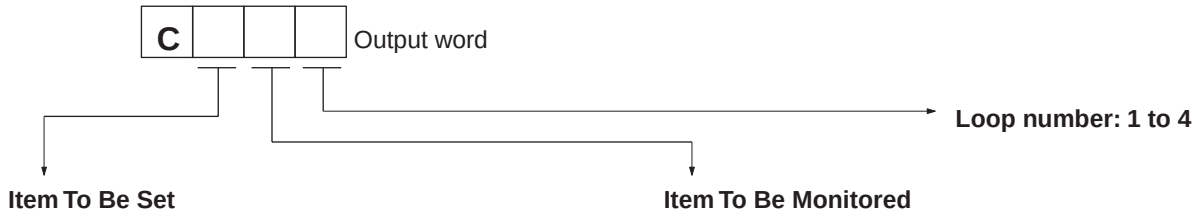

Value	Item to be set	Value	Item to be monitored
0	Set point	0	Set point
1	Proportional band (for advanced PID)	1	Proportional band (for advanced PID)
2	Integral time (for advanced PID)	2	Integral time (for advanced PID)
3	Derivative time (for advanced PID)	3	Derivative time (for advanced PID)
4	Hysteresis (for ON/OFF control)	4	Hysteresis (for ON/OFF control)
5	Control cycle (for advanced PID or manual control)	5	Control cycle (for advanced PID or manual control)
6	Input shift value	6	Input shift value
7	No item set	7	Process value
8	Manual manipulated variable	8	Manipulated variable
9	Do not set.	9	Status
A	Heater burnout alarm setting (only for models with heater burnout alarms)	A	Heater burnout alarm setting (only for models with heater burnout alarms)
B	Do not set.	B	Heater current (only for models with heater burnout alarms)

Operation Control Commands

Command	Operation	Validity
CCC□ (□ = 1 to 4 or A)	STOP	Always (STOP/RUN in Auto Mode)
CCD□ (□ = 1 to 4 or A)	RUN	
CDC□ (□ = 1 to 4 or A)	Manual Mode	Not valid during autotuning.
CDD□ (□ = 1 to 4 or A)	Auto Mode	
CFC□ (□ = 1 to 4 or A)	Autotuning	PID control (Not valid during Manual Mode or STOP.)
CFD□ (□ = 1 to 4 or A)	Cancel autotuning	PID control
CEEA	Writing set point to EEPROM	Always

Error Responses

Error response	Meaning	Remarks
EEEE	Watchdog timer error	Turn the power supply OFF and then back ON. If the error persists, replace the Unit.
E100	RAM read/write error	
E120	EEPROM error	
EE00	Parameter change during auto-tuning	Set parameter after autotuning has been completed.
EE01	Setting range error	Setting is out of range.
E400	Sensor error	Input error, sensor wire break, sensor short, etc.
E500	CT input error	Input of 55.0 A or more.
E900	Timeout error (for IOTC(—) instruction)	Response time of 200 ms or higher for macro instruction

SECTION 3
CQM1-TC00□/TC10□ Temperature Control Units

This section describes the features and operation of the CQM1-TC00□/TC10□ Temperature Control Units.

3-1 Features and Word Allocations 272
3-1-1 Features 272
3-1-2 Word Allocations 272
3-2 Specifications 273
3-3 Nomenclature 274
3-3-1 Control Modes 275
3-3-2 Switch Settings 275
3-4 Wiring 276
3-5 Application Examples 277
3-5-1 Basic Program for Temperature Control Unit 277
3-5-2 Run/Stop and Error Processing Program 278
3-5-3 ON/OFF Control 280
3-5-4 Advanced PID Control 281
3-6 AT (Expansion Mode) 282
3-6-1 Manual Settings (Expansion Mode) 283
3-6-2 Set Value Read 285
3-6-3 Set Value Write 286
3-7 Troubleshooting 287

3-1 Features and Word Allocations

3-1-1 Features

- The PID with advanced feed-forward circuitry (2 degrees of freedom) of the CQM1-TC00□/TC10□ assures stable temperature control. The Units can be set to ON/OFF control.
- CQM1-TC00□ Temperature Control Units for thermocouples and CQM1-TC10□ Temperature Control Units for platinum resistance thermometers are available. Each Temperature Control Unit can be used for two-loop temperature control.

Temperature control Units

Temperature sensor	Output type	
	NPN output	PNP output
Thermocouple	CQM1-TC001	CQM1-TC002
Platinum resistance thermometer	CQM1-TC101	CQM1-TC102

3-1-2 Word Allocations

I/O	Address	Bit			
		15 12	11 8	7 4	3 0
Output	m	Loop 1 set point (SP)			
	m + 1	Loop 2 set point (SP)			
Input	n	Loop 1 process value (PV)			
	n + 1	Loop 2 process value (PV)			

- One word each can be allocated for inputs and outputs if only one control loop is used (when DIP switch pin 5 is ON).
- Two words each will be allocated for inputs and outputs if two control loops are used (when DIP switch pin 5 is OFF),
- Data is handled as four digits of BCD, except that an F in the leftmost digit is used to indicate negative values. The meaning of each digit is shown below.

  CQM1-TC00□:10^3-10^2-10^1-10^0, e.g., F999 = –999

  CQM1-TC10□:10^2-10^1-10^0-10^{-1}, e.g., F999 = –99.9
- The set point setting range is as follows:
  F999 to 9999, or CCCC
- The contents of the process value is as follows:
  F999 to 9999: Process value
  E□□□: Error code
  FFFF: Initialization

3-2 Specifications

General Specifications

The general specifications of the CQM1-TC00□/TC10□ conform to those of the CQM1H/CQM1 Series.

Performance Specifications

Item		Specification
Input sensors and set point ranges	Sensors used with thermo-couples	CQM1-TC00□ K: –200 to 1,300 °C (–300 to 2,300 °F) CQM1-TC00□ J: –100 to 850 °C (–100 to 1,500 °F)
	Sensors used with platinum resistance thermometers	CQM1-TC10□ JPt100: –99.9 to 450.0 °C (–99.9 to 800.0 °F) CQM1-TC10□ Pt100: –99.9 to 450.0 °C (–99.9 to 800.0 °F)
Number of control loops		Two (either 1 or 2 loops can be used)
Control output		NPN or PNP output with short-circuit protection Power supply voltage: 24 VDC $^{+10\%}/_{-15\%}$ Maximum switching capacity: 100 mA per output Leakage current: 0.3 mA max. Residual voltage: 3.0 V max.
Control mode		ON/OFF or advanced PID control (2 degrees of freedom)
Setting and display accuracy		CQM1-TC00□: (Process value ±1% or ±3 °C, whichever is larger) ±1 digit max.
		CQM1-TC10□: (Process value ±1% or ±2 °C, whichever is larger) ±1 digit max.
Hysteresis		0.8 °C/°F
Proportional band		40.0 °C/°F
Derivative time		240 s
Integral time		40 s
Control period		20 s
Sampling period		1 s
Output refresh period		1 s
Current consumption		220 mA max. at 5 VDC
Weight		200 g max.
Dimensions		32 x 110 x 107 mm (W x H x D)

Dimensions

All dimensions are in millimeters.

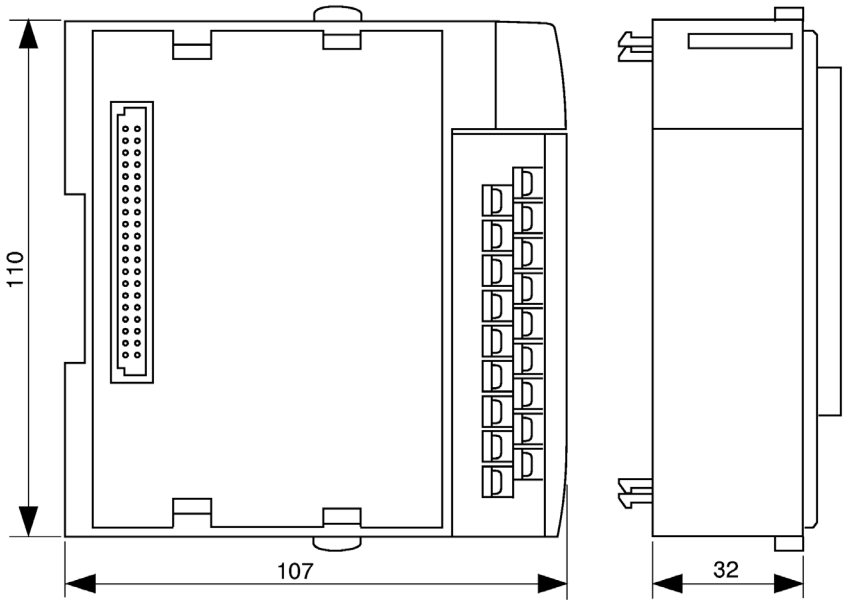

3-3 Nomenclature

Front View

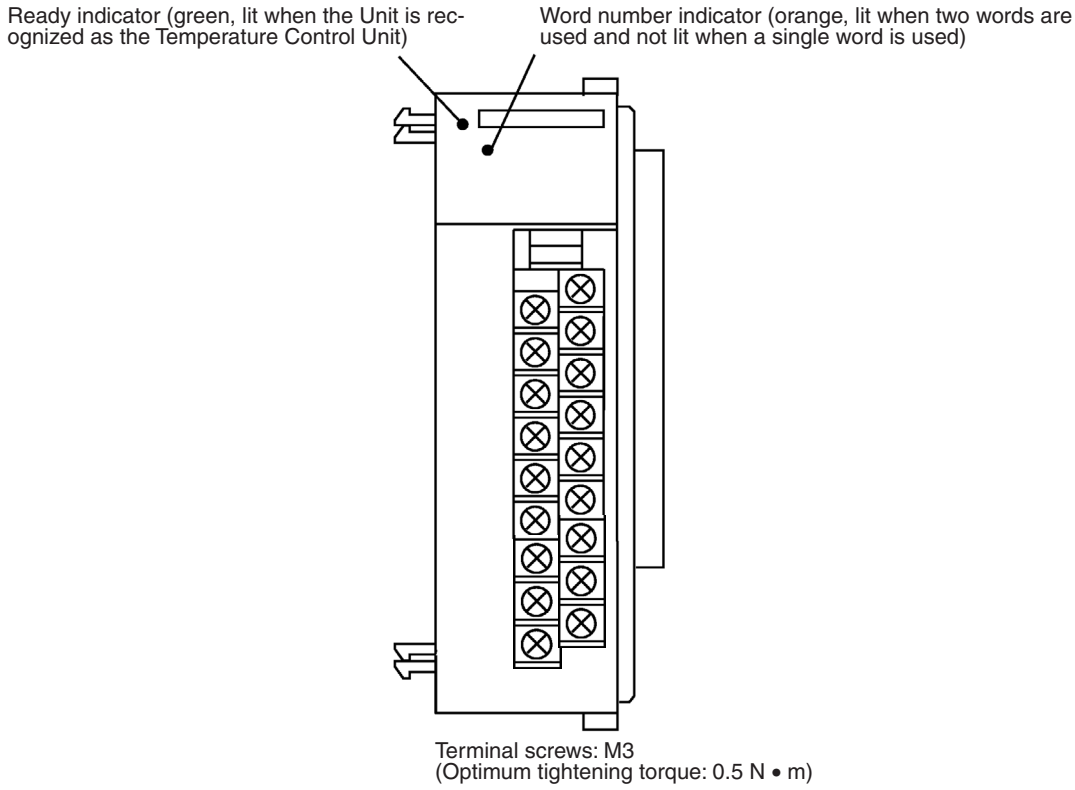

Side View

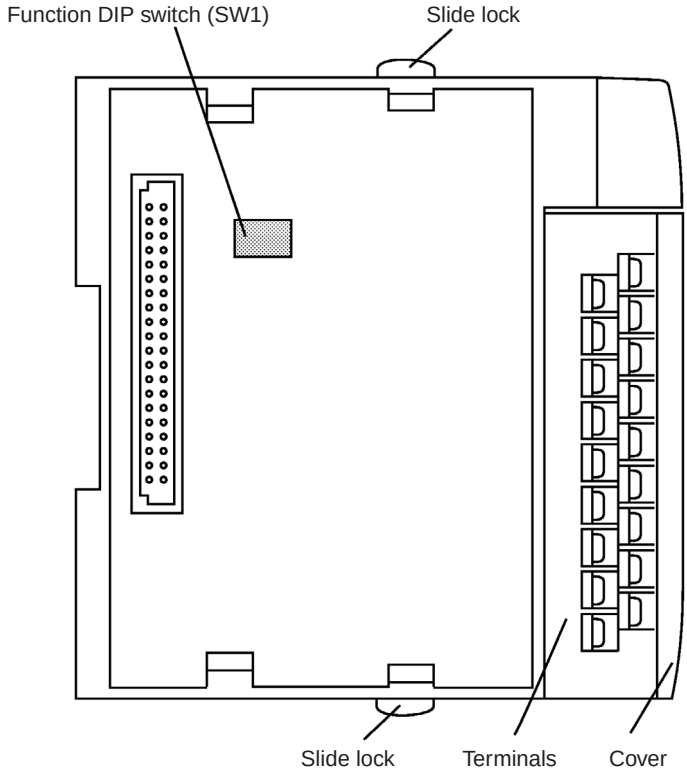

3-3-1 Control Modes

Control is performed independently for each control loop based on the set point data. The relationship between the set point data and the control operation is shown in the following table.

Set point	Control operation
F999 to 9999	Normal temperature control performed.
CCCC	Control stopped.
Other settings	Temperature control performed according to the most recent valid set point data. The PV will be EE01.

If the temperature exceeds the range from –999 to 9999, the process value data in the Temperature Controller will be frozen at –999 or 9999 and the data will be maintained at F999 or 9999, respectively.

The process value data will be set to FFFF during initialization; do not read the data as the process value at this time.

Short-circuit Protection

If the output is shorted, short-circuit protection will operate, turning the output OFF. To reset the short-circuit protection, either turn off the power supply or set the set point data to CCCC to stop control operation.

3-3-2 Switch Settings

1,2,3...

1. Set the function DIP switch pins (SW1) before connecting the Temperature Control Unit to the other Units of the PC.
2. All pins on the DIP switch are factory-set to OFF.
3. Use a pen tip or other pointed object to set the pins of the DIP switch.

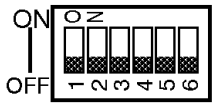

Pin	Function	OFF	ON
1	Control mode	ON/OFF	Advanced PID
2	Control operation	Reverse (heating control)	Normal (cooling control)
3	Temperature scale	°C	°F
4	Input sensor	TC00□: K TC10□: JPt100	TC00□: J TC10□: Pt100
5	Number of control loops (control points)	Two loops	One loop
6	Control period	20 s	2 s

Control Operation

Reverse Control

Used for heating control with heaters. If the temperature is lower than the set temperature (i.e., the temperature has negative deviation), the output of the heaters will be increased.

Normal Control

Used for suppressing excessively high temperature with cooling water. If the temperature is higher than the set temperature (i.e., the temperature has positive deviation), the output of the cooling water will be increased.

3-4 Wiring

Wiring

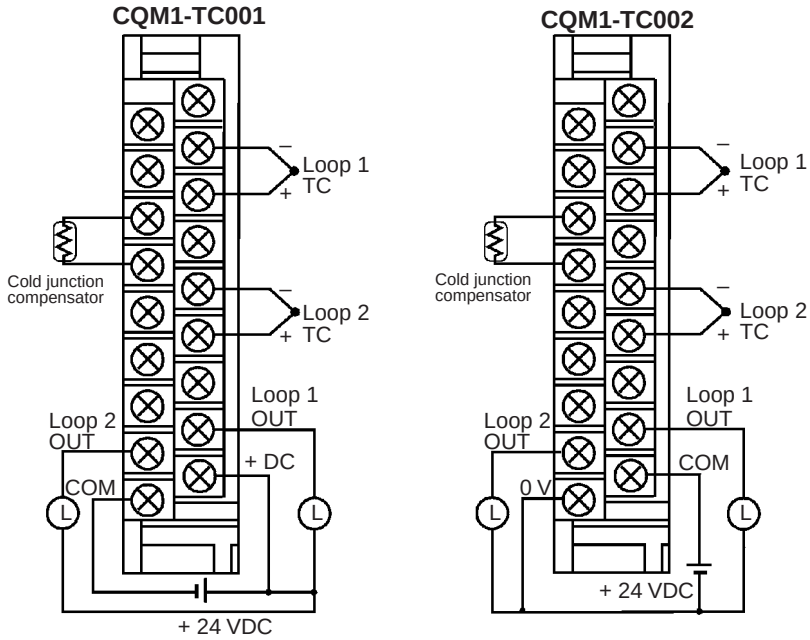

Note When using only one control loop, short-circuit the loop 2 input terminals. If used with the terminals open, “E400” (PV error) will be read into the CPU Unit for approximately 10 seconds when power is turned ON.

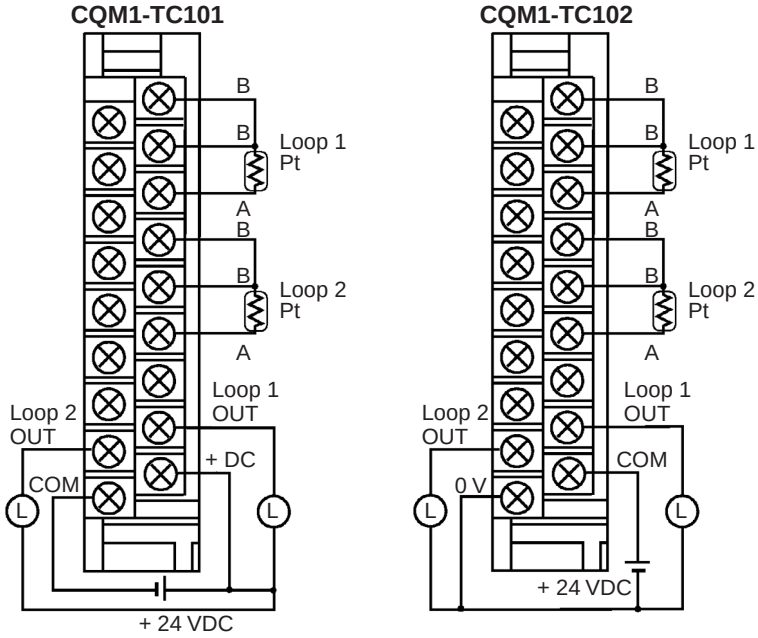

- Do not touch or remove the cold junction compensator. (CQM1-TC001/TC002)
- Connect to loop 1 terminals and turn ON pin 5 on SW1 when using only one control loop.
- Use the input sensor set on the function DIP switch.

Output Interface

Output Characteristeics

Maximum switching capability	100 mA, 24 VDC $^{+10\%}/_{-15\%}$
Leakage current	0.3 mA max.
Residual voltage	3.0 V max.
External supply voltage	15 mA min., 24 VDC $^{+10\%}/_{-15\%}$ (excluding load current)

Output Circuits

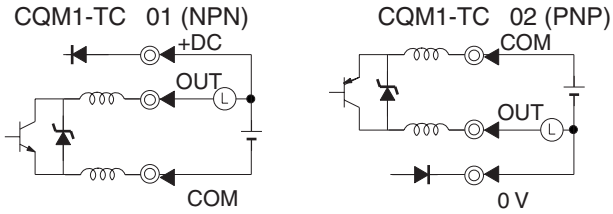

3-5 Application Examples

3-5-1 Basic Program for Temperature Control Unit

Operation (for Control Loop 1 Only)

The contents of DM 0000 are written to the Temperature Control Unit as the set point.

The process value is read from the Temperature Control Unit and written to DM 0001. If an error has occurred, however, the value written to DM 0001 will be treated as an error code.

Word/Bit Allocations (for Control Loop 1 Only)

Temperature Control Unit input word	IR 001
Temperature Control Unit output word	IR 100
Set point storage word	DM 0000
Process value storage word	DM 0001
Initialization End Flag	IR 01600

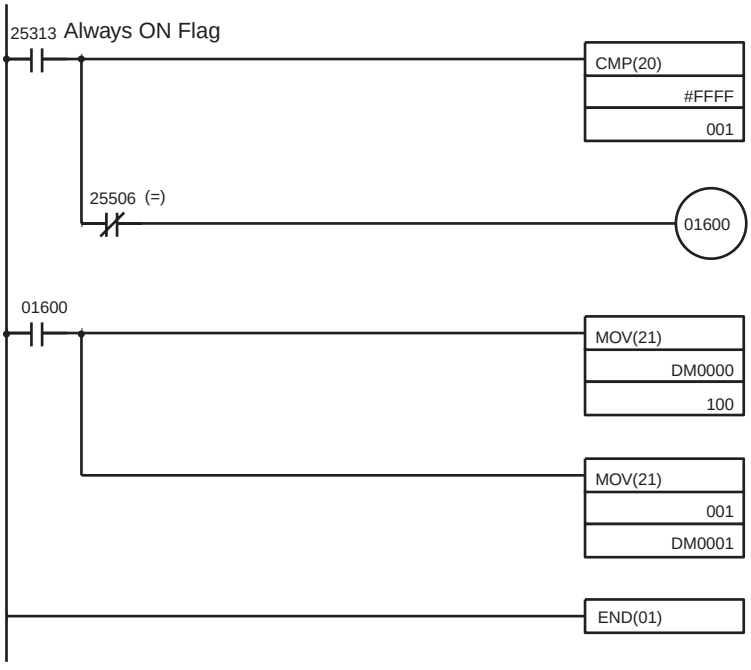

The contents of IR 001 is compared to FFFF to confirm that the Temperature Control has completed initialization processing. (See note 3)

If the process value (contents of IR 001) is not FFFF, IR 01600 is turned ON to indicate that initialization has been completed.

If IR 01600 is ON, the contents of DM 0000 will be written as the set point to IR 100.

If IR 01600 is ON, the contents of IR 001 will be read to DM 0001 as the process value.

Note

1. Write a program for control loop 2 in the same way.
2. The contents of both DM 0000 and DM 0001 are four-digit BCD except that an F in the leftmost digit is used to indicate negative values. The meaning of each digit is shown below.
   CQM1-TC00□: 10^3-10^2-10^1-10^0, e.g., F999 = –999
   CQM1-TC10□: 10^2-10^1-10^0-10^{-1}, e.g., F999 = –99.9
3. The process value data will be set to FFFF during initialization; do not read the data as the process value at this time.

DM 0000

Write a value in the following ranges to DM 0000 according to the sensor to be used.

Model	Sensor	Range
TC00□ for thermocouples	K	–200 to 1,300 °C (F200 to 1300) –300 to 2,300 °F (F300 to 2300)
	J	–100 to 850 °C (F100 to 0850) –100 to 1,500 °F (F100 to 1500)
TC10□ for platinum resistance thermometers	JPt100	–99.9 to 450.0 °C (F999 to 4500) –99.9 to 800.0 °F (F999 to 8000)
	Pt100	–99.9 to 450.0 °F (F999 to 4500) –99.9 to 800.0 °F (F999 to 8000)

3-5-2 Run/Stop and Error Processing Program

Operation (for Control Loop 1 Only)

The contents of DM 0000 are written to the Temperature Control Unit as the set point.

The process value is read from the Temperature Control Unit and written to DM 0001. If an error has occurred, however, the value written to DM 0001 will be treated as an error code.

If the CQM1-TC00□/TC10□ in operation has an error, the condition of the error is stored as error status.

Temperature control is enabled or disabled by turning the RUN/STOP bit ON or OFF (loop 1 Only).

Word/Bit Allocations (for Control Loop 1 Only)

Item	Word	Remarks
Temperature Control Unit input word (loop 1)	IR 001	---
Temperature Control Unit output word (loop 1)	IR 100	---
Set point storage word	DM 0000	---
Process value storage word	DM 0001	---
Initialization End Flag	IR 01600	---
Error status	IR 017	IR 01700: ON for input sensor error. IR 01701: ON for setting range error. IR 01702: ON for Watchdog timer, RAM, Read/Write, or EEPROM error. IR 01715: ON for any error.
RUN/Stop bit	IR 01800	Control operations will be run when IR 01800 is turned OFF and will be stopped when it is turned ON.

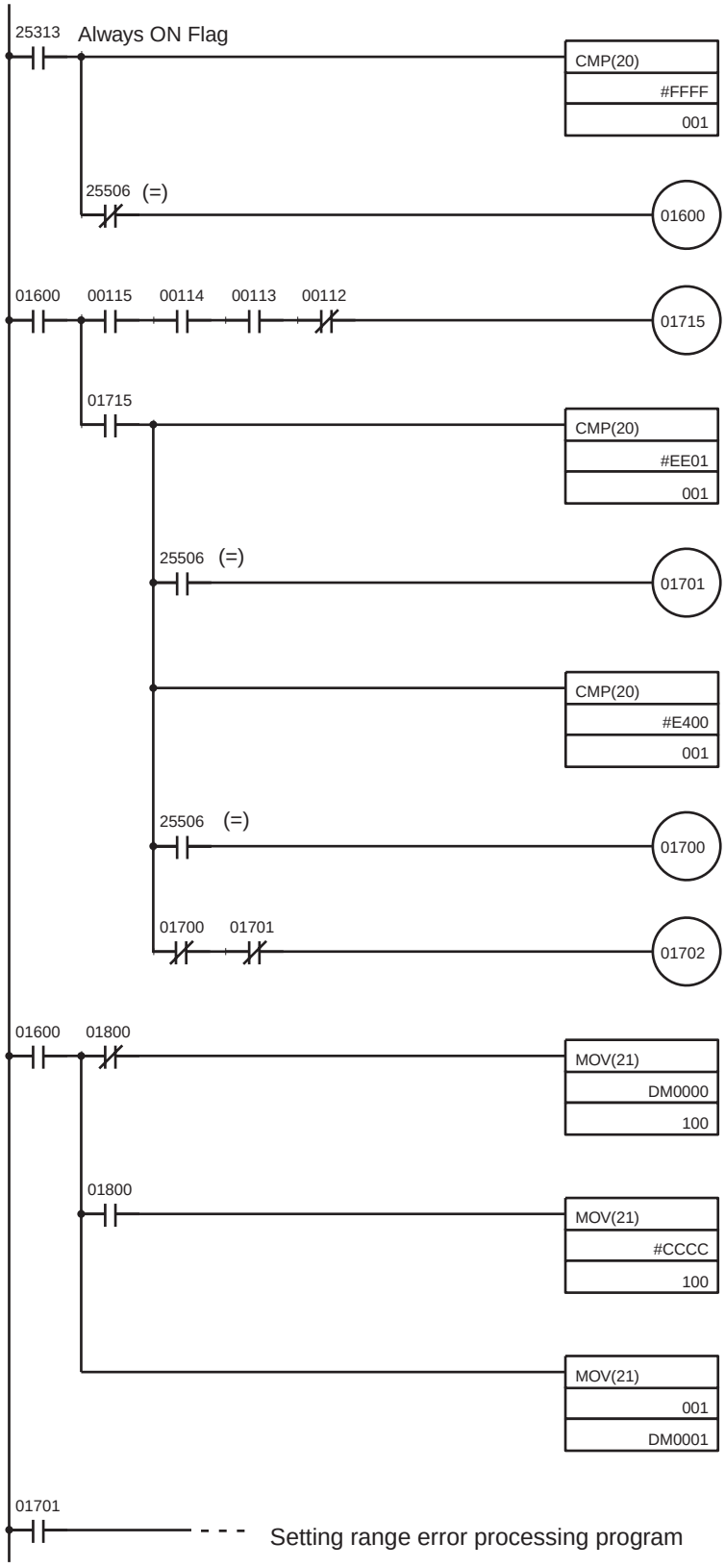

The contents of IR 001 is compared to FFFF to confirm that the Temperature Control has completed initialization processing.

If the process value (contents of IR 001) is not FFFF, IR 01600 is turned ON to indicate that initialization has been completed.

If the leftmost four bits of IR 001 are 1110 (E), IR 01715 is turned ON to signal an error.

A comparison is made to EE01 to see if a setting range error has occurred.

If the process value is EE01, IR 01701 is turned ON to signal a setting range error.

A comparison is made to E400 to see if an input sensor error has occurred.

If the process value is E400, IR 01700 is turned ON to signal an input sensor error.

If neither a setting range error nor an input sensor error has occurred, IR 01702 is turned ON to signal other errors.

If IR 01800 is OFF, the contents of DM 0000 will be written as the set point to IR 100.

If IR 01800 is ON, CCCC will be written to IR 100.

The contents of IR 001 is written to DM 0001 as the process value.

If IR 01701 is ON, the correct set point value data must be set.

(Continued on the next page)

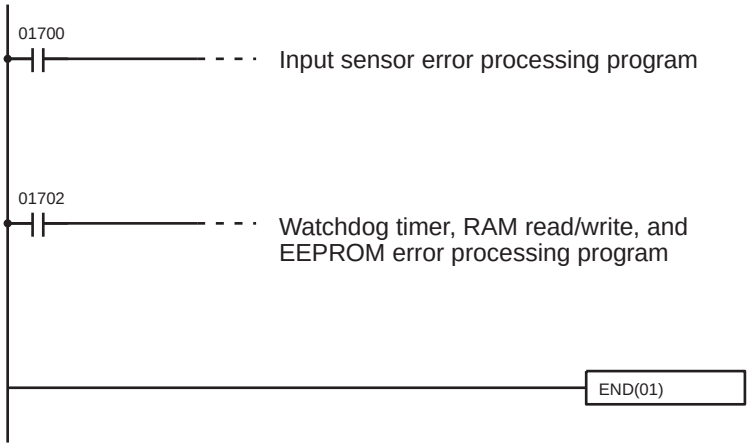

If IR 01700 is ON, check the connections to the input sensor and cold junction compensator. If connections are correct for both the input sensor and cold junction compensator, replace the Unit.

If IR 01702 is ON, turn power OFF and then back on. If the error persists, replace the Unit.

Note If more than one error occurs at the same time, the error with the highest priority will be output as the process value data.
Error priority from highest to lowest is as follows:
Watchdog timer > RAM read/write > EEPROM > Setting range > Input sensor

3-5-3 ON/OFF Control

The default value of the ON/OFF control hysteresis (i.e., SW1-1 is turned OFF) of the Temperature Control Unit is 0.8 °C/°F. Refer to *3-6-1 Manual Settings (Expansion Mode)* for details on changing the hysteresis.

The following table lists the effectiveness of hysteresis adjustment.

Adjustment	Effect
Reduce the value	• The hunting amplitude becomes small. • When the process value is fluttering near the set point, the output becomes unstable. • The period between the output turned ON and turned OFF becomes short.
Increase the value	• The hunting amplitude becomes large. • The output near the set point becomes stable. • The period between the output turned ON and turned OFF becomes long.

If ON/OFF control is used, in the following graph hunting, the amplitude and period of which depend on the controlled object, will occur even if the hysteresis of the Temperature Control Unit is adjusted. If the hunting is not within the permissible range determined by the user, use advanced PID control.

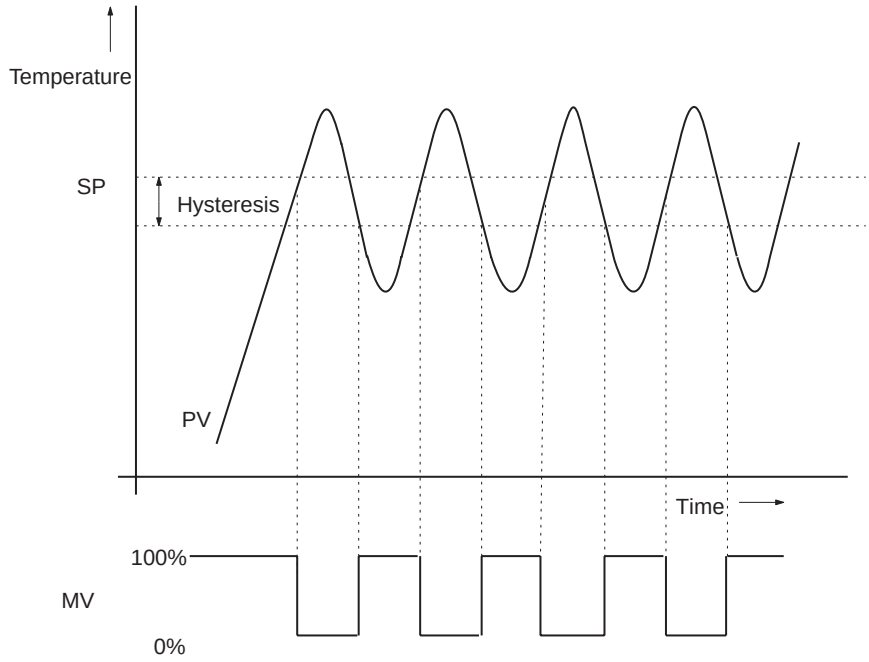

3-5-4 Advanced PID Control

If advanced PID control (i.e., SW1-1 is turned ON) is selected, the Temperature Control Unit will operate with the P value fixed to 40.0, the I value fixed to 240, and the D value fixed to 40.

The user's required control may not be performed with the default PID parameters. In this case, refer to *3-6 AT (Expansion Mode)* and *3-6-1 Manual Settings (Expansion Mode)* to set the most suitable PID parameters.

Even if the most suitable PID parameters are set, hunting may occur if the control period is long. In this case, set SW1-6 according to the characteristics of the controlled object. If SW1-6 is turned OFF, the control period will be 20 s and if SW1-6 is turned ON, the control period will be 2 s.

When the control period is set to 2 s (i.e., SW1-6 is turned ON), it can be set to 1 through 99 s freely. Refer to *3-6-1 Manual Settings (Expansion Mode)* for details.

3-6 AT (Expansion Mode)

To enter the Expansion Mode, change the connection of jumper connector from 2-3 to 1-2.

Left-side View of the Unit

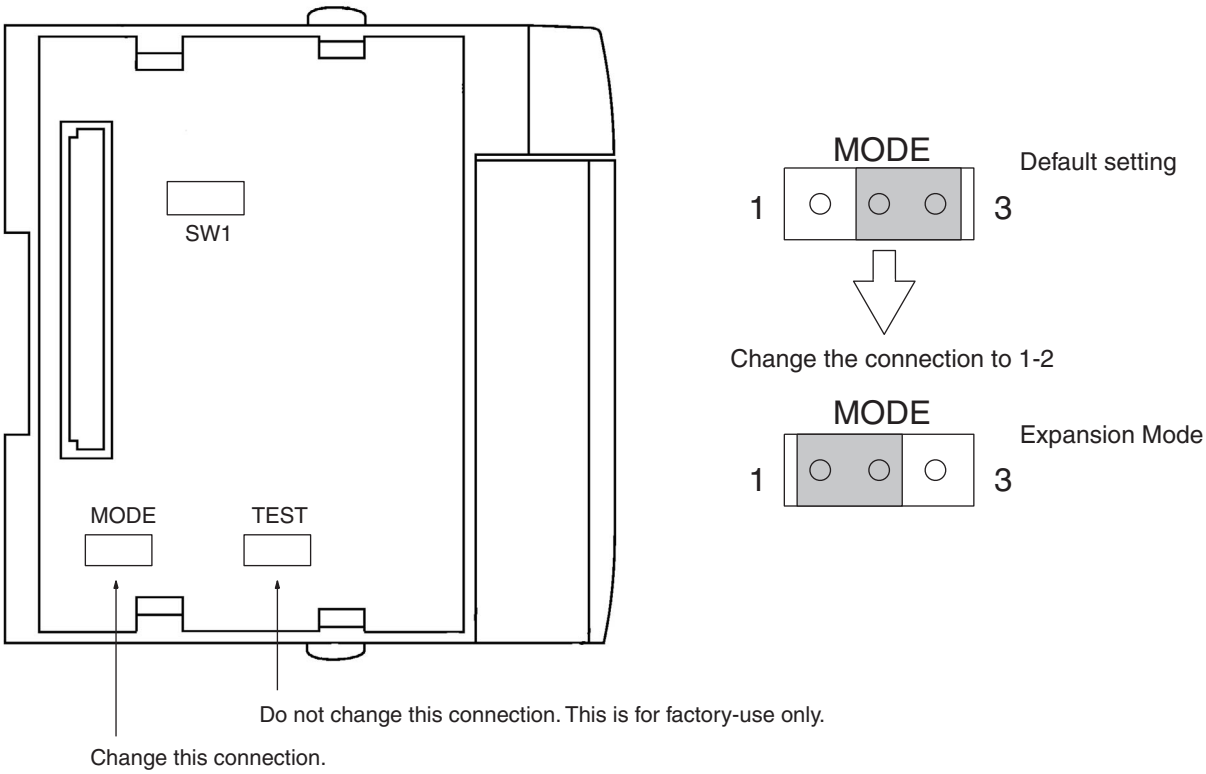

By executing AT (auto-tuning), the most suitable PID parameters can be set.

The AT function allows PID parameter calculation by recognizing the characteristics of the object from the waveform (amplitude and period) to be generated when ON/OFF control is executed (refer to the following diagram). The PID parameters obtained will be refreshed automatically, and after completion of auto-tuning, the Temperature Control Unit will start operating using the parameters.

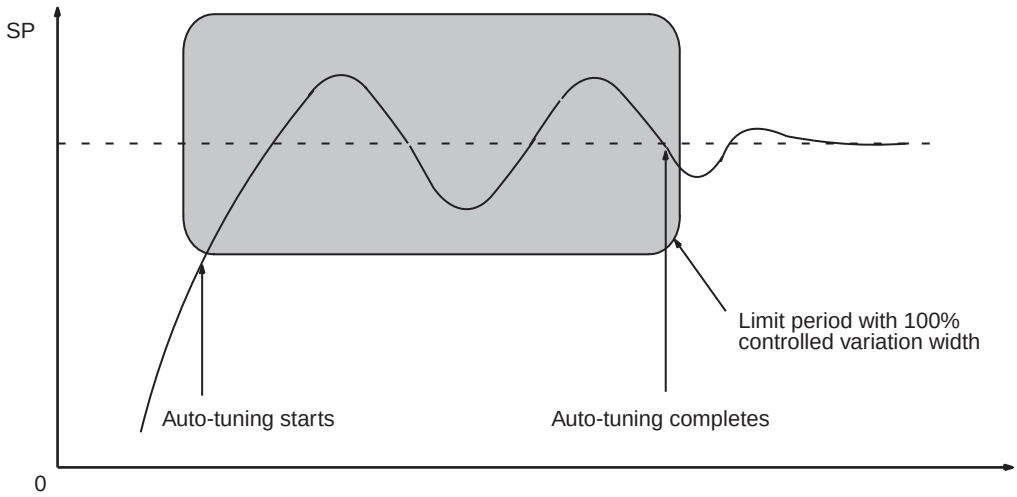

Auto-tuning can be started by taking the following procedure on the Programming Console.

Default: SP = 100 °C and PV = 98 °C

```
c100 c001
0100 0098
```

Write the AT start code “CF00” to the output word of the relevant loop and confirm that the input word will become CF00.

```
c100 c001
CF00 CF00
```

Set SP to 100 °C again.

```
c100 c001
0100 0098
```

To cancel auto-tuning, use the code “CF01” instead and follow the above procedure.

Note

1. To put the Temperature Control Unit into expansion mode, change the jumper pin on the side of the Unit from 2 and 3 to 1 and 2.
2. Auto-tuning is not available if the half period exceeds 9999 s (approximately 2 hours 45 minutes). If the half cycle exceeds 9999 s, no measurement is possible and the Temperature Control Unit will restart auto-tuning automatically.
3. If the output word data is left as CF00, auto-tuning will be repeated. Be sure to return it to the set value.

3-6-1 Manual Settings (Expansion Mode)

When the Temperature Control Unit is turned ON, the SP will be allocated to the output word and the PV will be allocated to the PV word. By changing the contents of the allocation, the following six set values can be read or written.

Parameter	Setting range	Unit	Default	Remarks
Set point	–999 to 9,999	°C/°F	0	---
Proportional band	0.1 to 999.9	°C/°F	40.0	---
Integral time	0 to 3999	Seconds	240	---
Derivative time	0 to 3999	Seconds	40	---
Hysteresis	0.1 to 999.9	°C/°F	0.8	---
Control period	1 to 99	Seconds	2	When SW1-6 is set to ON, the value can be changed. In this case, the default is “2.”
Input shift value	–99.9 to 999.9	°C/°F	0.0	---
Process value	–999 to 9,999	°C/°F	---	Read-only
Manipulated variable	0.1 to 100.0	%	---	Read-only
Status	---	---	---	Read-only

Write an allocation change code to the output for allocation changes. The following is the format of the allocation change code.

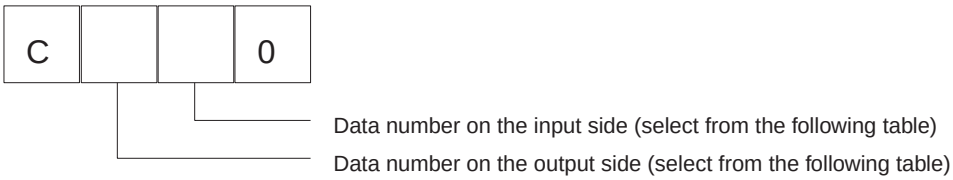

Output side		Input side		Enabled
No.	Contents	No.	Contents	
0	Set point	0	Set point	Always enabled.
1	Proportional band	1	Proportional band	For PID control.
2	Integral time	2	Integral time	For PID control.
3	Derivative time	3	Derivative time	For PID control.
4	Hysteresis	4	Hysteresis	For ON/OFF control.
5	Control period	5	Control period	For PID control.
6	Input shift	6	Input shift	Always enabled.
7	(Not selectable)	7	Process value	Always enabled.
8	(Not selectable)	8	Manipulated variable	Always enabled.
9	(Not selectable)	9	Status	Always enabled.

Example

If the user wants to write derivative time to the output word and a control period to the input word, input C350 as the allocation change code to be written.

Note When the Temperature Control Unit is turned on, the allocation change code “C070” will be written.

Use the following procedure on the Programming Console for allocation changes.

Default: SP = 100 °C and PV = 98 °C

```
c100 c001
0100 0098
```

Write the allocation change code “C350” to the output word of the relevant loop and confirm that the input word will become C350.

```
c100 c001
c350 c350
```

Write the derivative time to the output word so that the control period will be read from the input word.

```
c100 c001
0040 0020
```

Note To put the Temperature Control Unit into expansion mode, change the jumper pin on the side of the Unit from 2 and 3 to 1 and 2.

Data Status

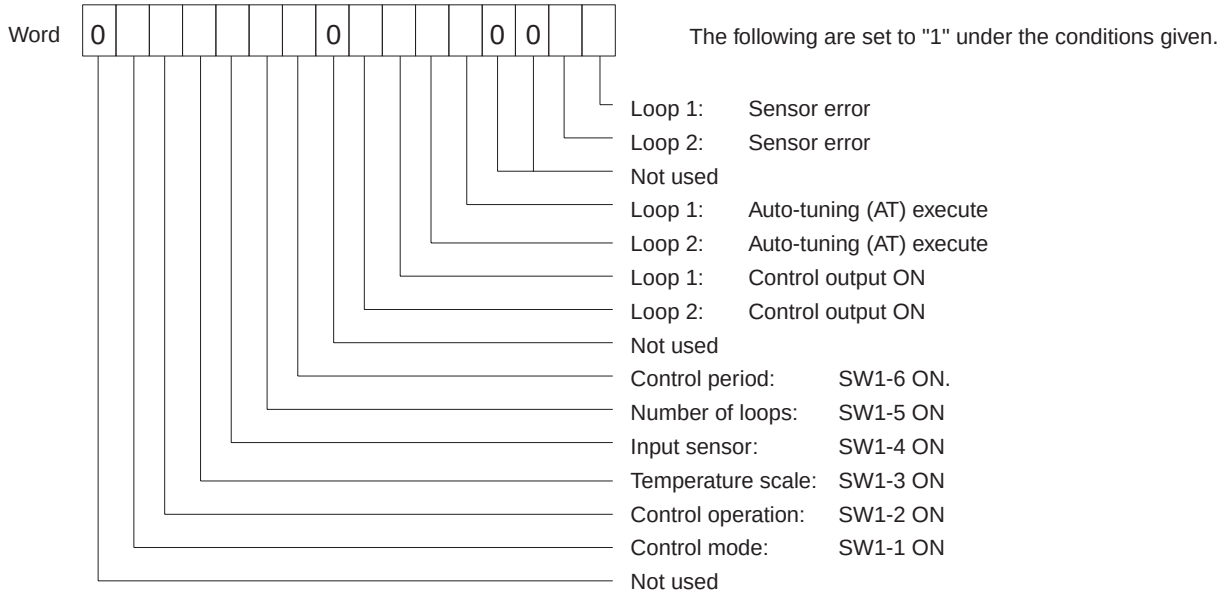

Note The data status is updated every 200 ms.

3-6-2 Set Value Read

Execute the following on the Programming Console for loops 1 and 2.

1,2,3... 1. Read the proportional band.

Default: SP = 100 °C and PV = 98 °C

```
c100 c001
0100 0098
```

Write the allocation change code “C010” to the output word of the relevant loop.

```
c100 c001
C010 0098
```

Confirm that the input word of the relevant loop will become C010.

```
c100 c001
C010 C010
```

Write the set point to the output word of the relevant loop.

```
c100 c001
0100 C010
```

Record the value read from the input word of the relevant loop as the proportional band.

```
c100 c001
C100 0400
```

2. Read the integral time.

Refer to the above procedure and replace the allocation change code “C010” with “C020” and write it as the integral time.

3. Read the derivative time.

Refer to the above procedure and replace the allocation change code “C010” with “C030” and write it as the derivative time.

4. Read the hysteresis.

   Refer to the above procedure and replace the allocation change code “C010” with “C040” and write it as the hysteresis.

5. Read the control period.

   Refer to the above procedure and replace the allocation change code “C010” with “C050” and write it as the control period.

6. Read the input shift.

   Refer to the above procedure and replace the allocation change code “C010” with “C060” and write it as the input shift.

7. Read the manipulated variable.

   Refer to the above procedure and replace the allocation change code “C010” with “C080” and write it as the manipulated variable.

8. Read the status.

   Refer to the above procedure and replace the allocation change code “C010” with “C090” and write it as the status.

9. Return to the original status.

   Refer to the above procedure and replace the allocation change code “C010” with “C070” and execute so that the Temperature Control Unit will return to the original status (i.e., the status when turning on the Temperature control Unit).

3-6-3 Set Value Write

Execute the following on the Programming Console for loops 1 and 2.

1,2,3... 1. Write the proportional band.

   Default: SP = 100 °C and PV = 98 °C

```
c100 c001
0100 0098
```

   Write the allocation change code “C110” to the output word of the relevant loop.

```
c100 c001
C110 0098
```

   Confirm that the input word of the relevant loop will become C110.

```
c100 c001
C110 C110
```

   Write the set point to the output word of the relevant loop.

```
c100 c001
0400 C110
```

   Confirm that the value read from the input word of the relevant loop is the value that has been set

```
c100 c001
0400 0400
```

2. Write the integral time.

   Refer to the above procedure and replace the allocation change code “C110” with “C220” and write it as the integral time.

3. Write the derivative time.

   Refer to the above procedure and replace the allocation change code “C110” with “C330” and write it as the derivative time.

4. Write the hysteresis.

   Refer to the above procedure and replace the allocation change code “C110” with “C440” and write it as the hysteresis.

5. Write the control period.

   Refer to the above procedure and replace the allocation change code “C110” with “C550” and write it as the control period.

6. Write the input shift.

   Refer to the above procedure and replace the allocation change code “C110” with “C660” and write it as the input shift.

7. Return to the original status.

   Refer to the above procedure and replace the allocation change code “C110” with “C070” and execute and then write the set point so that the Temperature Control Unit will return to the original status (i.e., the status when turning on the Temperature Control Unit).

Note The IOTC(—) instruction can be used with CQM1H CPU Units with lot number 0160 or later. If the ALLOCATE I/O command is sent, up to 250 ms may be required to received a response just after power is turned ON. Program the CPU Unit so that this command is not sent within the first 100 ms after power is turned ON.

3-7 Troubleshooting

Error		Control output	Remedy
Watchdog timer error	“EEEE” PV data for control loops 1 and 2.	Will be OFF for control loops 1 and 2.	Turn the power supply off and then back on. If the error persists, replace the Unit.
RAM read/write error	“E100” PV data for control loops 1 and 2.		
EEPROM error	“E120” PV data for control loops 1 and 2.		
Setting range error	“EE01” PV data for control loops with error.	Control will be normal.	Reset the SV to within the proper range.
Sensor error	“E400” PV data for control loops with error.	Will be OFF for control loop with error.	Check the connections to the input sensor and cold junction compensator. If connections are correct for both the input sensor and cold junction compensator, replace the Unit.

Revision History

A manual revision code appears as a suffix to the catalog number on the front cover of the manual.

Cat. No. W238-E1-10

Revision code

The following table outlines the changes made to the manual during each revision. Page numbers refer to the previous version.

Revision code	Date	Revised content
1	December 1993	Original production
2	June 1994	Parts IV, V, and VI added. **Page xi:** Parts IV, V, and VI introductions added. **Page 25:** Input and output words were opposite to each other and have been corrected. **Page 45:** COM 1 corrected to CQM1 in the bottom diagram.
3	February 1995	*Part I B7A Interface Units* has been completely changed to reflect the addition of new models. *Part II G730 Interface Units* added. *Sections 5, 6, and 7* have been added to *Part VII Temperature Control Units*. **Pages 22, 25:** Switch diagram changed. **Pages 24, 38, 130:** Terminal screw size added to the diagram. **Page 28:** Note 1 at the bottom of the page rewritten. **Pages 29, 77, 145:** Dimensions in the table corrected. **Page 29, 53, 54:** Dimensions added to page. **Pages 53, 77:** Accuracy specification corrected. **Page 77:** Internal current consumption corrected. **Page 128:** Third paragraph deleted since the current detection function is not provided. **Page 131:** “PID with feed-forward circuitry” corrected to “Advanced PID” in the table.
4	October 1995	*Part VII Linear Sensor Interface Unit* added. **Pages 6, 7:** Note 3 and caution added. **Page 23:** Minimum input time and note 4 added to the table. **Page 87:** Input circuit added for the Analog Input Unit. **Page 177:** A table of available commands and functions added. **Page 189:** Wording of description for I/O words corrected. **Page 204:** Wording of note corrected.
4A	July 1996	**Pages 66, 70:** Note on EC directives added. **Page 78:** CQM1-PA216 added. **Page 116:** Reference for polygonal line conversion corrected.
5	June 1997	**Page 5, 32, 62, 77, 78, 126, 170:** CQM1-CPU4□ model numbers changed to CQM1-CPU4□-EV. **Page 31:** Number of I/O points changed from 192 to 256. **Page 63, 64:** C200HX/HG/HE added to the PC column of the table. “(F)” added to C1000H and C500. **Page 112, 113:** Wiring diagrams changed for 3-1-2 Wiring and 3-1-3 Terminal Arrangement. **Page 138, 139, 143:** Force measurements changed to SI units. **Page 157:** Enclosure rating in the tables corrected. **Page 261:** Setting and display accuracy specifications corrected.
6	November 1998	Added *Precautions* to the beginning of the manual. **Pages 10 to 14, 19, 34 to 36, 40, 41, 234:** Added tightening torque value. **Page 108:** Added *Front View* under *2-1 Nomenclature*. **Page 186:** Changed tightening torque value. **Page 238:** Added a note to the wiring diagram.
7	September 1999	Information relating to CQM1H added.

Revision code	Date	Revised content
8	August 2000	CQM1-TC20□/TC30□ were added to part VIII and part VIII was restructured. The following specific changes were also made. **Page xvi:** Additions made to safety precautions. **Pages xvii and xviii:** Additions and changes made to application precautions. **Page 232:** First bullet in features rewritten. **Page 238:** Bullet added to the bottom of the page. **Page 239:** External supply voltage specification modified. **Page 244:** IR 01700 condition in middle of diagram changed to NC condition. **Page 245:** Program comments changed. **Page 251:** Parameters added to table. **Page 252:** Table modified. **Page 257:** A note about the use of IOTC added. **Page 261:** Control output specifications added.
09	December 2002	**Pages 28, 32, 35, 50:** Minor changes made to manual references. **Page 35, 36:** Minor changes made to model numbers. **Pages 256, 257:** “ASL” changed to “@ASL”.
10	November 2003	**Page 242:** “101” corrected to “102.” **Page 244:** Model number corrected in table. **Page 264:** Changes made to description of operations. **Page 265:** Changes made to charts showing word allocations. **Pages 266 to 268:** Layout changes made to ladder diagrams.

OMRON CORPORATION
FA Systems Division H.Q.
66 Matsumoto
Mishima-city, Shizuoka 411-8511
Japan
Tel: (81)55-977-9181/Fax: (81)55-977-9045

Regional Headquarters

OMRON EUROPE B.V.
Wegalaan 67-69, NL-2132 JD Hoofddorp
The Netherlands
Tel: (31)2356-81-300/Fax: (31)2356-81-388

OMRON ELECTRONICS LLC
1 East Commerce Drive, Schaumburg, IL 60173
U.S.A.
Tel: (1)847-843-7900/Fax: (1)847-843-8568

OMRON ASIA PACIFIC PTE. LTD.
83 Clemenceau Avenue,
#11-01, UE Square,
Singapore 239920
Tel: (65)6835-3011/Fax: (65)6835-2711

OMRON

Authorized Distributor:

Cat. No. W238-E1-10

Note: Specifications subject to change without notice.

Printed in Japan

This manual is printed on 100% recycled paper.

Cat. No. W238-E1-10 SYSMAC CQM1H/CQM1 Series Dedicated I/O Units OPERATION MANUAL OMRON