Universal Voltage Monitors

MC34161, MC33161, NCV33161

The MC34161/MC33161 are universal voltage monitors intended for use in a wide variety of voltage sensing applications. These devices offer the circuit designer an economical solution for positive and negative voltage detection. The circuit consists of two comparator channels each with hysteresis, a unique Mode Select Input for channel programming, a pinned out 2.54 V reference, and two open collector outputs capable of sinking in excess of 10 mA. Each comparator channel can be configured as either inverting or noninverting by the Mode Select Input. This allows over, under, and window detection of positive and negative voltages. The minimum supply voltage needed for these devices to be fully functional is 2.0 V for positive voltage sensing and 4.0 V for negative voltage sensing.

Applications include direct monitoring of positive and negative voltages used in appliance, automotive, consumer, and industrial equipment.

Features

- Unique Mode Select Input Allows Channel Programming
- Over, Under, and Window Voltage Detection
- Positive and Negative Voltage Detection
- Fully Functional at 2.0 V for Positive Voltage Sensing and 4.0 V for Negative Voltage Sensing
- Pinned Out 2.54 V Reference with Current Limit Protection
- Low Standby Current
- Open Collector Outputs for Enhanced Device Flexibility
- NCV Prefix for Automotive and Other Applications Requiring Unique Site and Control Change Requirements; AEC−Q100 Qualified and PPAP Capable
- These Devices are Pb−Free and are RoHS Compliant

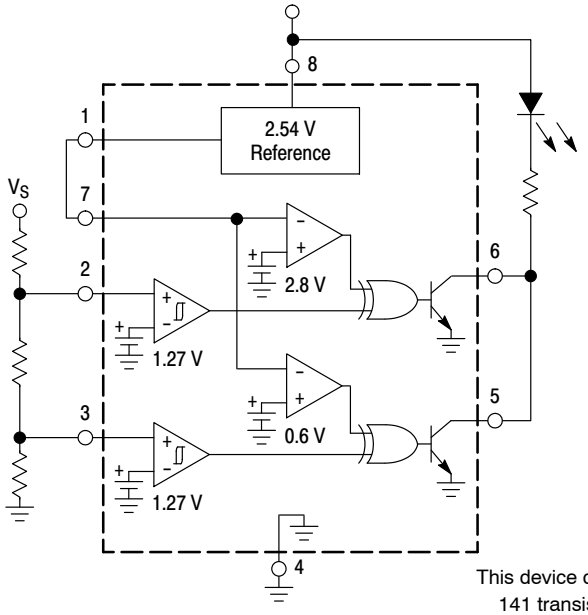

This device contains 141 transistors.

Figure 1. Simplified Block Diagram
(Positive Voltage Window Detector Application)

MARKING DIAGRAMS

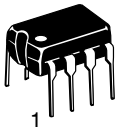

PDIP−8
P SUFFIX
CASE 626

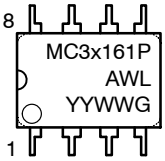

SOIC−8
D SUFFIX
CASE 751

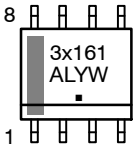

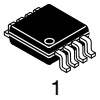

Micro8™
DM SUFFIX
CASE 846A

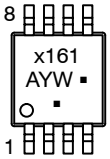

x	= 3 or 4
A	= Assembly Location
WL, L	= Wafer Lot
YY, Y	= Year
WW, W	= Work Week
G or ▪	= Pb−Free Package

(Note: Microdot may be in either location)

PIN CONNECTIONS

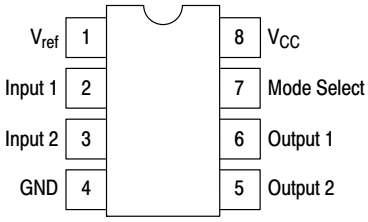

(TOP VIEW)

ORDERING INFORMATION

See detailed ordering and shipping information in the package dimensions section on page 15 of this data sheet.

© Semiconductor Components Industries, LLC, 2015

MAXIMUM RATINGS (Note 1)

Rating	Symbol	Value	Unit
Power Supply Input Voltage	V_{CC}	40	V
Comparator Input Voltage Range	V_{in}	– 1.0 to +40	V
Comparator Output Sink Current (Pins 5 and 6) (Note 2)	I_{Sink}	20	mA
Comparator Output Voltage	V_{out}	40	V
Power Dissipation and Thermal Characteristics (Note 2) P Suffix, Plastic Package, Case 626 Maximum Power Dissipation @ T_A = 70°C Thermal Resistance, Junction–to–Air D Suffix, Plastic Package, Case 751 Maximum Power Dissipation @ T_A = 70°C Thermal Resistance, Junction–to–Air DM Suffix, Plastic Package, Case 846A Thermal Resistance, Junction–to–Ambient	 P_D $R_{\theta JA}$ P_D $R_{\theta JA}$ $R_{\theta JA}$	 800 100 450 178 240	 mW °C/W mW °C/W °C/W
Operating Junction Temperature	T_J	+150	°C
Operating Ambient Temperature (Note 3) MC34161 MC33161 NCV33161	T_A	 0 to +70 – 40 to +105 –40 to +125	°C
Storage Temperature Range	T_{stg}	– 55 to +150	°C

Stresses exceeding those listed in the Maximum Ratings table may damage the device. If any of these limits are exceeded, device functionality should not be assumed, damage may occur and reliability may be affected.

1. This device series contains ESD protection and exceeds the following tests:
   Human Body Model 2000 V per MIL–STD–883, Method 3015.
   Machine Model Method 200 V.
2. Maximum package power dissipation must be observed.
3. T_{low} = 0°C for MC34161 T_{high} = +70°C for MC34161
   –40°C for MC33161 +105°C for MC33161
   –40°C for NCV33161 +125°C for NCV33161

Share Feedback
Your Opinion Matters

ELECTRICAL CHARACTERISTICS (V_{CC} = 5.0 V, for typical values T_A = 25°C, for min/max values T_A is the operating ambient temperature range that applies [Notes 4 and 5], unless otherwise noted.)

Characteristics	Symbol	Min	Typ	Max	Unit
COMPARATOR INPUTS					
Threshold Voltage, V_{in} Increasing (T_A = 25°C) (T_A = T_{min} to T_{max})	V_{th}	1.245 1.235	1.27 –	1.295 1.295	V
Threshold Voltage Variation (V_{CC} = 2.0 V to 40 V)	ΔV_{th}	–	7.0	15	mV
Threshold Hysteresis, V_{in} Decreasing	V_H	15	25	35	mV
Threshold Difference $\lvert V_{th1} - V_{th2} \rvert$	V_D	–	1.0	15	mV
Reference to Threshold Difference ($V_{ref} - V_{in1}$), ($V_{ref} - V_{in2}$)	V_{RTD}	1.20	1.27	1.32	V
Input Bias Current (V_{in} = 1.0 V) (V_{in} = 1.5 V)	I_{IB}	– –	40 85	200 400	nA
MODE SELECT INPUT					
Mode Select Threshold Voltage (Figure 6) Channel 1 Channel 2	$V_{th(CH\ 1)}$ $V_{th(CH\ 2)}$	V_{ref}+0.15 0.3	V_{ref}+0.23 0.63	V_{ref}+0.30 0.9	V
COMPARATOR OUTPUTS					
Output Sink Saturation Voltage (I_{Sink} = 2.0 mA) (I_{Sink} = 10 mA) (I_{Sink} = 0.25 mA, V_{CC} = 1.0 V)	V_{OL}	– – –	0.05 0.22 0.02	0.3 0.6 0.2	V
Off−State Leakage Current (V_{OH} = 40 V)	I_{OH}	–	0	1.0	μA
REFERENCE OUTPUT					
Output Voltage (I_O = 0 mA, T_A = 25°C)	V_{ref}	2.48	2.54	2.60	V
Load Regulation (I_O = 0 mA to 2.0 mA)	Reg_{load}	–	0.6	15	mV
Line Regulation (V_{CC} = 4.0 V to 40 V)	Reg_{line}	–	5.0	15	mV
Total Output Variation over Line, Load, and Temperature	ΔV_{ref}	2.45	–	2.60	V
Short Circuit Current	I_{SC}	–	8.5	30	mA
TOTAL DEVICE					
Power Supply Current (V_{Mode}, V_{in1}, V_{in2} = GND) (V_{CC} = 5.0 V) (V_{CC} = 40 V)	I_{CC}	– –	450 560	700 900	μA
Operating Voltage Range (Positive Sensing) (Negative Sensing)	V_{CC}	2.0 4.0	– –	40 40	V

Product parametric performance is indicated in the Electrical Characteristics for the listed test conditions, unless otherwise noted. Product performance may not be indicated by the Electrical Characteristics if operated under different conditions.

4. Low duty cycle pulse techniques are used during test to maintain junction temperature as close to ambient as possible.
5. T_{low} = 0°C for MC34161, −40°C for MC33161, −40°C for NCV33161; T_{high} = +70°C for MC34161, +105°C for MC33161, +125°C for NCV33161

Share Feedback
Your Opinion Matters

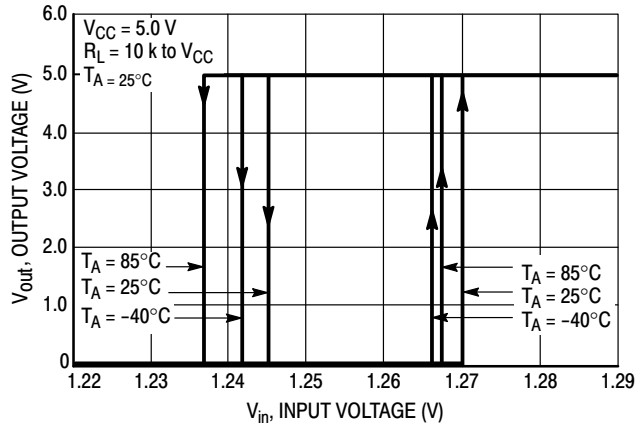

Figure 2. Comparator Input Threshold Voltage

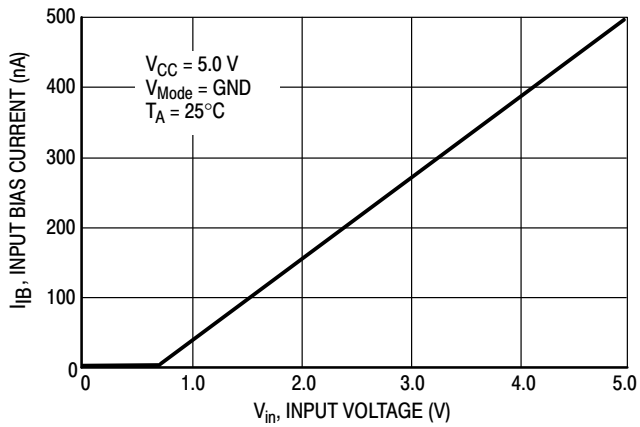

Figure 3. Comparator Input Bias Current versus Input Voltage

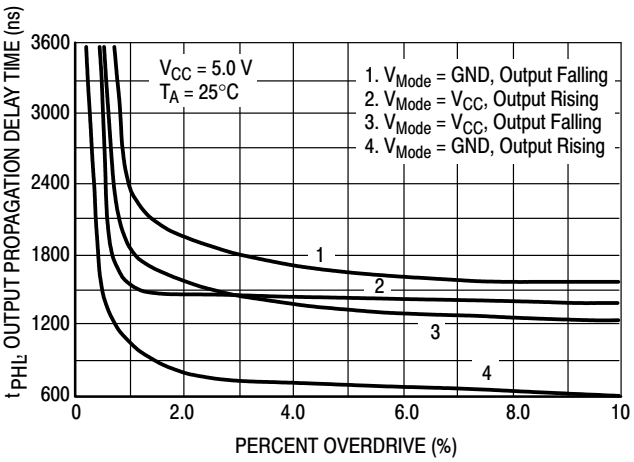

Figure 4. Output Propagation Delay Time versus Percent Overdrive

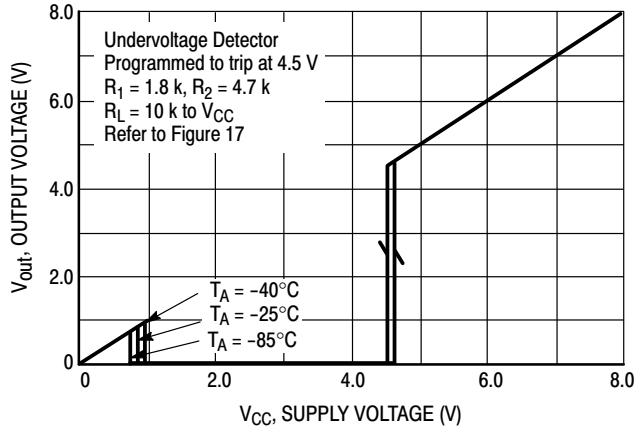

Figure 5. Output Voltage versus Supply Voltage

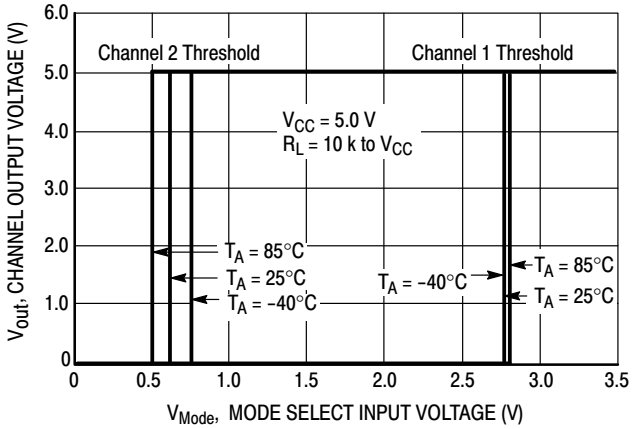

Figure 6. Mode Select Thresholds

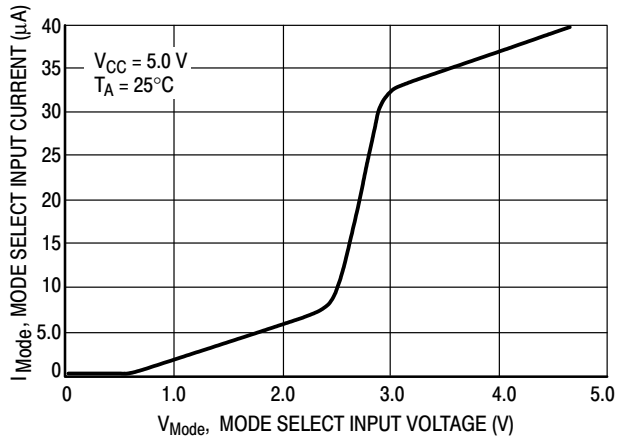

Figure 7. Mode Select Input Current versus Input Voltage

Share Feedback
Your Opinion Matters

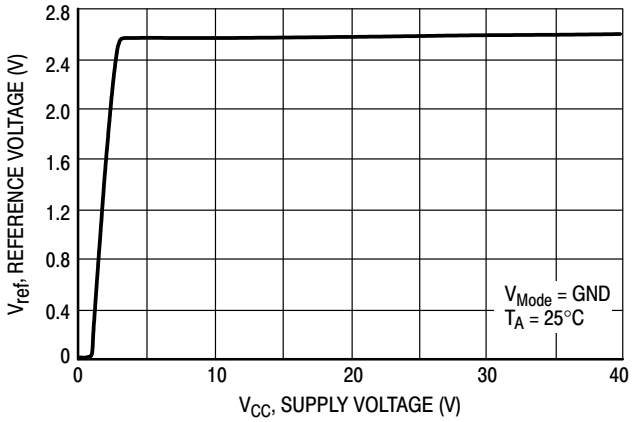

Figure 8. Reference Voltage versus Supply Voltage

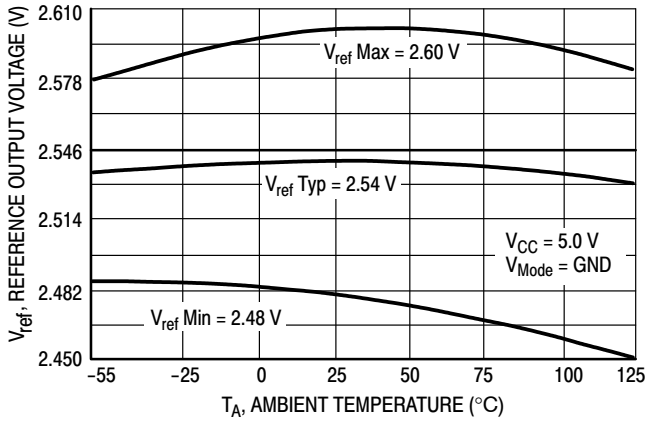

Figure 9. Reference Voltage versus Ambient Temperature

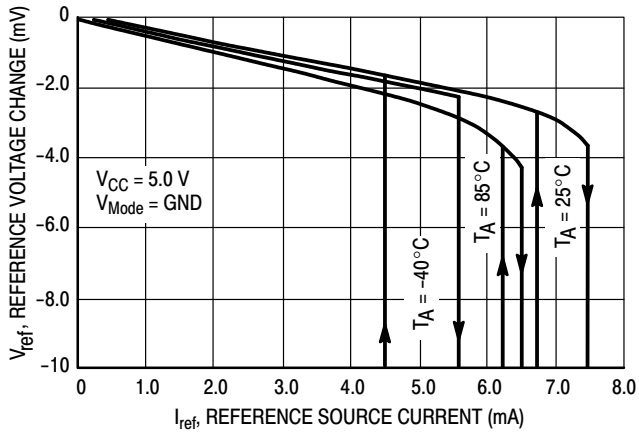

Figure 10. Reference Voltage Change versus Source Current

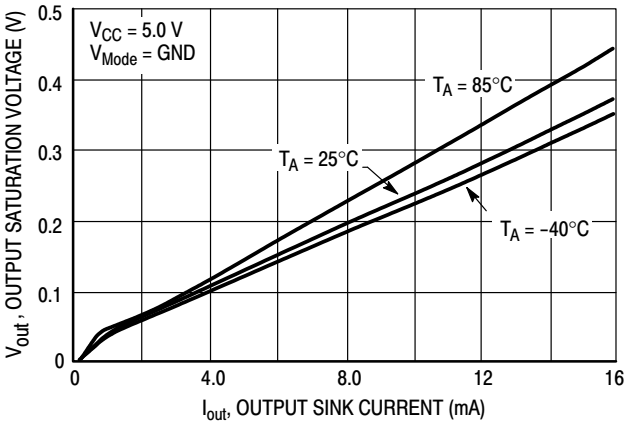

Figure 11. Output Saturation Voltage versus Output Sink Current

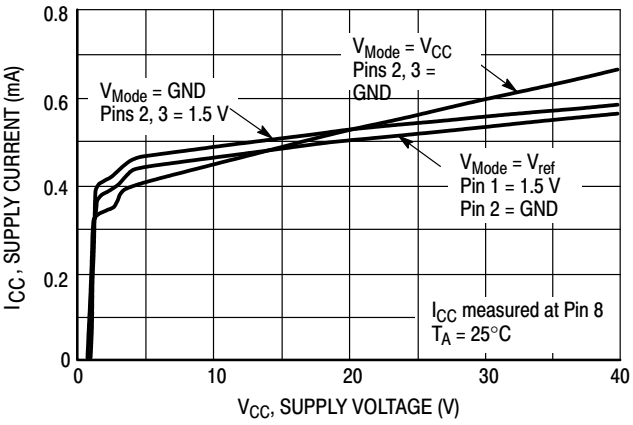

Figure 12. Supply Current versus Supply Voltage

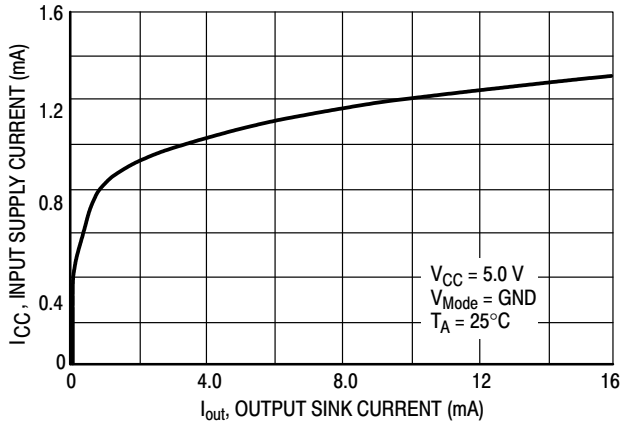

Figure 13. Supply Current versus Output Sink Current

Share Feedback
Your Opinion Matters

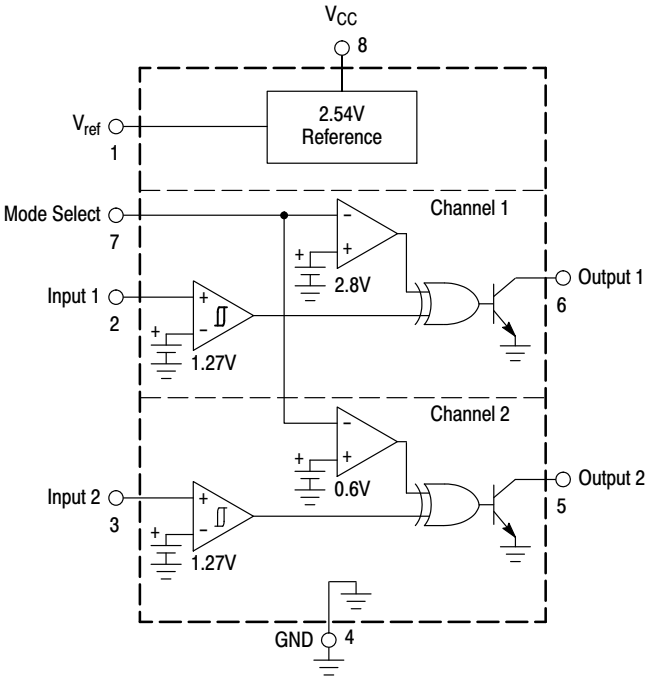

Figure 14. MC34161 Representative Block Diagram

Mode Select Pin 7	Input 1 Pin 2	Output 1 Pin 6	Input 2 Pin 3	Output 2 Pin 5	Comments
GND	0 1	0 1	0 1	0 1	Channels 1 & 2: Noninverting
V_{ref}	0 1	0 1	0 1	1 0	Channel 1: Noninverting Channel 2: Inverting
V_{CC} (>2.9 V)	0 1	1 0	0 1	1 0	Channels 1 & 2: Inverting

Figure 15. Truth Table

Share Feedback
Your Opinion Matters

FUNCTIONAL DESCRIPTION

Introduction

To be competitive in today's electronic equipment market, new circuits must be designed to increase system reliability with minimal incremental cost. The circuit designer can take a significant step toward attaining these goals by implementing economical circuitry that continuously monitors critical circuit voltages and provides a fault signal in the event of an out−of−tolerance condition. The MC34161, MC33161 series are universal voltage monitors intended for use in a wide variety of voltage sensing applications. The main objectives of this series was to configure a device that can be used in as many voltage sensing applications as possible while minimizing cost. The flexibility objective is achieved by the utilization of a unique Mode Select input that is used in conjunction with traditional circuit building blocks. The cost objective is achieved by processing the device on a standard Bipolar Analog flow, and by limiting the package to eight pins. The device consists of two comparator channels each with hysteresis, a mode select input for channel programming, a pinned out reference, and two open collector outputs. Each comparator channel can be configured as either inverting or noninverting by the Mode Select input. This allows a single device to perform over, under, and window detection of positive and negative voltages. A detailed description of each section of the device is given below with the representative block diagram shown in Figure 14.

Input Comparators

The input comparators of each channel are identical, each having an upper threshold voltage of 1.27 V ±2.0% with 25 mV of hysteresis. The hysteresis is provided to enhance output switching by preventing oscillations as the comparator thresholds are crossed. The comparators have an input bias current of 60 nA at their threshold which approximates a 21.2 MΩ resistor to ground. This high impedance minimizes loading of the external voltage divider for well defined trip points. For all positive voltage sensing applications, both comparator channels are fully functional at a V_{CC} of 2.0 V. In order to provide enhanced device ruggedness for hostile industrial environments, additional circuitry was designed into the inputs to prevent device latchup as well as to suppress electrostatic discharges (ESD).

Reference

The 2.54 V reference is pinned out to provide a means for the input comparators to sense negative voltages, as well as a means to program the Mode Select input for window detection applications. The reference is capable of sourcing in excess of 2.0 mA output current and has built−in short circuit protection. The output voltage has a guaranteed tolerance of ±2.4% at room temperature.

The 2.54 V reference is derived by gaining up the internal 1.27 V reference by a factor of two. With a power supply voltage of 4.0 V, the 2.54 V reference is in full regulation, allowing the device to accurately sense negative voltages.

Mode Select Circuit

The key feature that allows this device to be flexible is the Mode Select input. This input allows the user to program each of the channels for various types of voltage sensing applications. Figure 15 shows that the Mode Select input has three defined states. These states determine whether Channel 1 and/or Channel 2 operate in the inverting or noninverting mode. The Mode Select thresholds are shown in Figure 6. The input circuitry forms a tristate switch with thresholds at 0.63 V and V_{ref} + 0.23 V. The mode select input current is 10 μA when connected to the reference output, and 42 μA when connected to a V_{CC} of 5.0 V, refer to Figure 7.

Output Stage

The output stage uses a positive feedback base boost circuit for enhanced sink saturation, while maintaining a relatively low device standby current. Figure 11 shows that the sink saturation voltage is about 0.2 V at 8.0 mA over temperature. By combining the low output saturation characteristics with low voltage comparator operation, this device is capable of sensing positive voltages at a V_{CC} of 1.0 V. These characteristics are important in undervoltage sensing applications where the output must stay in a low state as V_{CC} approaches ground. Figure 5 shows the Output Voltage versus Supply Voltage in an undervoltage sensing application. Note that as V_{CC} drops below the programmed 4.5 V trip point, the output stays in a well defined active low state until V_{CC} drops below 1.0 V.

APPLICATIONS

The following circuit figures illustrate the flexibility of this device. Included are voltage sensing applications for over, under, and window detectors, as well as three unique configurations. Many of the voltage detection circuits are shown with the open collector outputs of each channel connected together driving a light emitting diode (LED). This 'ORed' connection is shown for ease of explanation and it is only required for window detection applications. Note that many of the voltage detection circuits are shown with a dashed line output connection. This connection gives the inverse function of the solid line connection. For example, the solid line output connection of Figure 16 has the LED 'ON' when input voltage V_S is above trip voltage V_2, for overvoltage detection. The dashed line output connection has the LED 'ON' when V_S is below trip voltage V_2, for undervoltage detection.

Share Feedback
Your Opinion Matters

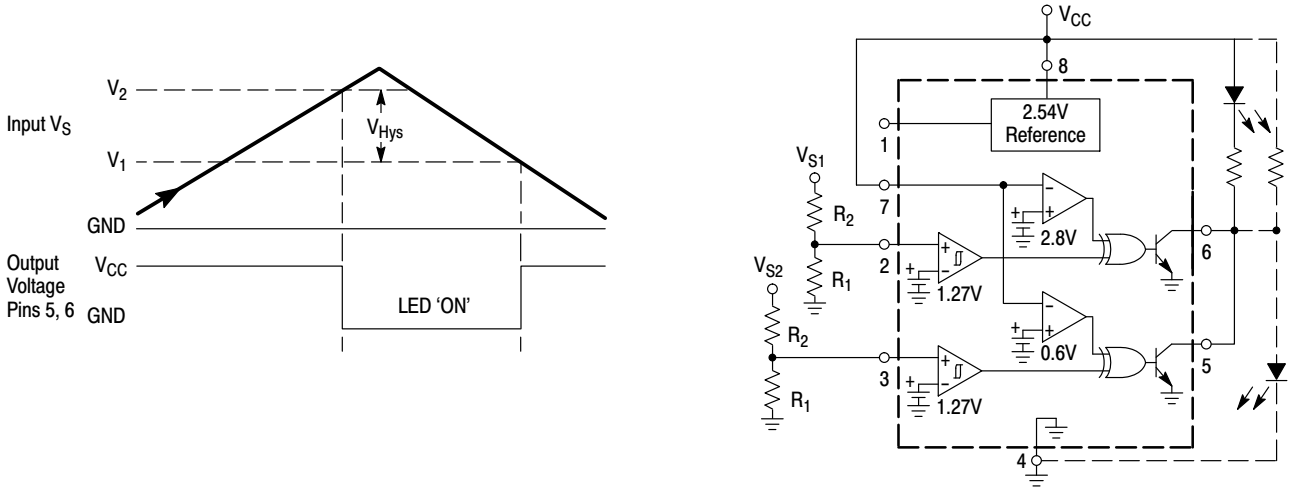

The above figure shows the MC34161 configured as a dual positive overvoltage detector. As the input voltage increases from ground, the LED will turn 'ON' when V_{S1} or V_{S2} exceeds V_2. With the dashed line output connection, the circuit becomes a dual positive undervoltage detector. As the input voltage decreases from the peak towards ground, the LED will turn 'ON' when V_{S1} or V_{S2} falls below V_1.

For known resistor values, the voltage trip points are:

$$V_1 = (V_{th} - V_H)\left(\frac{R_2}{R_1} + 1\right) \qquad V_2 = V_{th}\left(\frac{R_2}{R_1} + 1\right)$$

For a specific trip voltage, the required resistor ratio is:

$$\frac{R_2}{R_1} = \frac{V_1}{V_{th} - V_H} - 1 \qquad \frac{R_2}{R_1} = \frac{V_2}{V_{th}} - 1$$

Figure 16. Dual Positive Overvoltage Detector

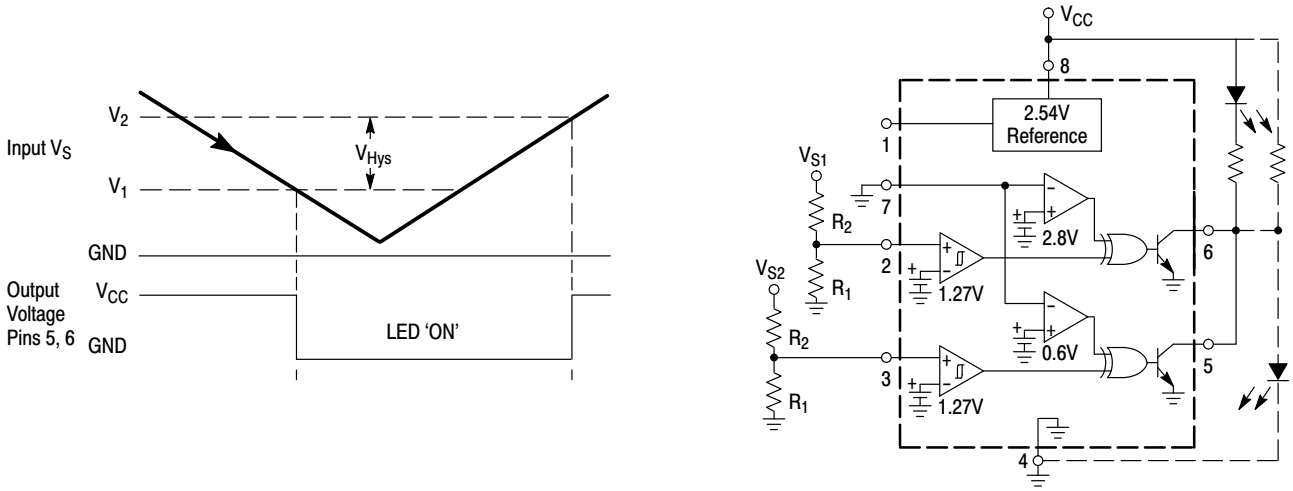

The above figure shows the MC34161 configured as a dual positive undervoltage detector. As the input voltage decreases towards ground, the LED will turn 'ON' when V_{S1} or V_{S2} falls below V_1. With the dashed line output connection, the circuit becomes a dual positive overvoltage detector. As the input voltage increases from ground, the LED will turn 'ON' when V_{S1} or V_{S2} exceeds V_2.

For known resistor values, the voltage trip points are:

$$V_1 = (V_{th} - V_H)\left(\frac{R_2}{R_1} + 1\right) \qquad V_2 = V_{th}\left(\frac{R_2}{R_1} + 1\right)$$

For a specific trip voltage, the required resistor ratio is:

$$\frac{R_2}{R_1} = \frac{V_1}{V_{th} - V_H} - 1 \qquad \frac{R_2}{R_1} = \frac{V_2}{V_{th}} - 1$$

Figure 17. Dual Positive Undervoltage Detector

Share Feedback
Your Opinion Matters

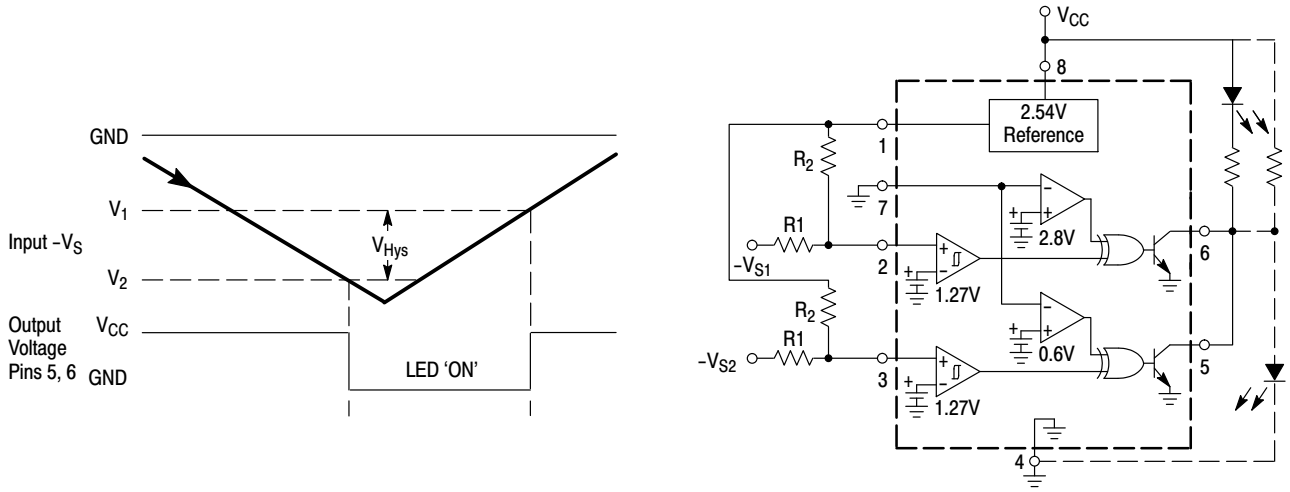

The above figure shows the MC34161 configured as a dual negative overvoltage detector. As the input voltage increases from ground, the LED will turn 'ON' when $-V_{S1}$ or $-V_{S2}$ exceeds V_2. With the dashed line output connection, the circuit becomes a dual negative undervoltage detector. As the input voltage decreases from the peak towards ground, the LED will turn 'ON' when $-V_{S1}$ or $-V_{S2}$ falls below V_1.

For known resistor values, the voltage trip points are:

$$V_1 = \frac{R_1}{R_2}(V_{th} - V_{ref}) + V_{th} \qquad V_2 = \frac{R_1}{R_2}(V_{th} - V_H - V_{ref}) + V_{th} - V_H$$

For a specific trip voltage, the required resistor ratio is:

$$\frac{R_1}{R_2} = \frac{V_1 - V_{th}}{V_{th} - V_{ref}} \qquad \frac{R_1}{R_2} = \frac{V_2 - V_{th} + V_H}{V_{th} - V_H - V_{ref}}$$

Figure 18. Dual Negative Overvoltage Detector

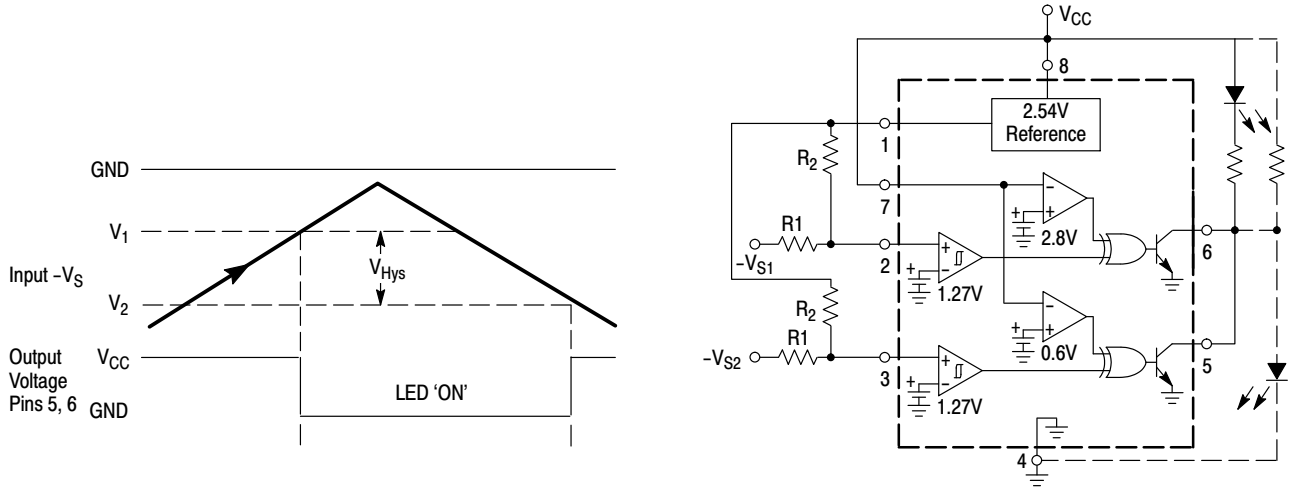

The above figure shows the MC34161 configured as a dual negative undervoltage detector. As the input voltage decreases towards ground, the LED will turn 'ON' when $-V_{S1}$ or $-V_{S2}$ falls below V_1. With the dashed line output connection, the circuit becomes a dual negative overvoltage detector. As the input voltage increases from ground, the LED will turn 'ON' when $-V_{S1}$ or $-V_{S2}$ exceeds V_2.

For known resistor values, the voltage trip points are:

$$V_1 = \frac{R_1}{R_2}(V_{th} - V_{ref}) + V_{th} \qquad V_2 = \frac{R_1}{R_2}(V_{th} - V_H - V_{ref}) + V_{th} - V_H$$

For a specific trip voltage, the required resistor ratio is:

$$\frac{R_1}{R_2} = \frac{V_1 - V_{th}}{V_{th} - V_{ref}} \qquad \frac{R_1}{R_2} = \frac{V_2 - V_{th} + V_H}{V_{th} - V_H - V_{ref}}$$

Figure 19. Dual Negative Undervoltage Detector

Share Feedback
Your Opinion Matters

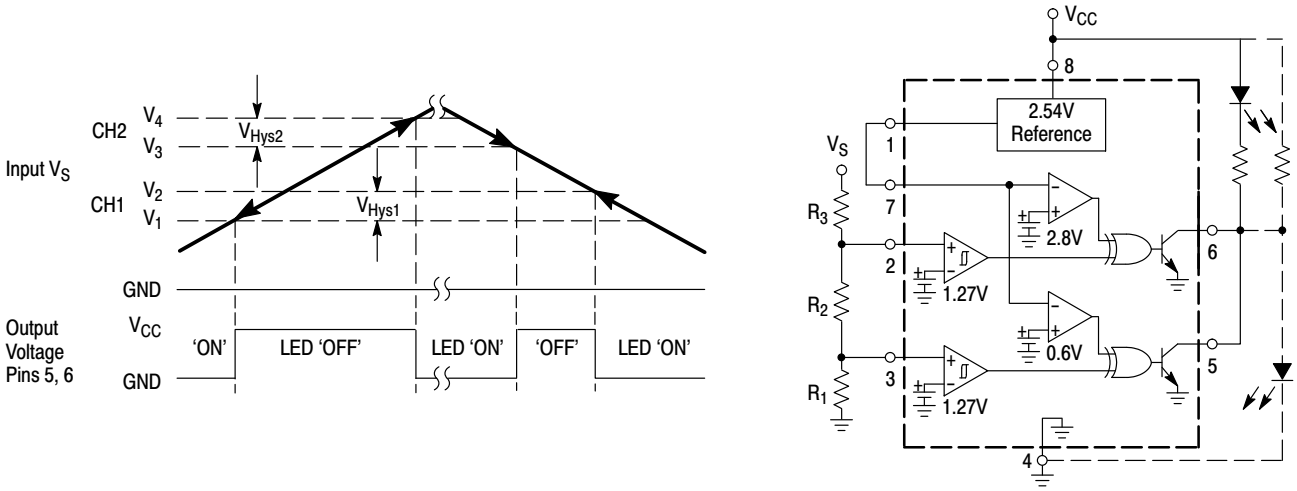

The above figure shows the MC34161 configured as a positive voltage window detector. This is accomplished by connecting channel 1 as an undervoltage detector, and channel 2 as an overvoltage detector. When the input voltage V_S falls out of the window established by V_1 and V_4, the LED will turn 'ON'. As the input voltage falls within the window, V_S increasing from ground and exceeding V_2, or V_S decreasing from the peak towards ground and falling below V_3, the LED will turn 'OFF'. With the dashed line output connection, the LED will turn 'ON' when the input voltage V_S is within the window.

For known resistor values, the voltage trip points are:

$$V_1 = (V_{th1} - V_{H1})\left(\frac{R_3}{R_1 + R_2} + 1\right) \qquad V_3 = (V_{th2} - V_{H2})\left(\frac{R_2 + R_3}{R_1} + 1\right)$$

$$V_2 = V_{th1}\left(\frac{R_3}{R_1 + R_2} + 1\right) \qquad V_4 = V_{th2}\left(\frac{R_2 + R_3}{R_1} + 1\right)$$

For a specific trip voltage, the required resistor ratio is:

$$\frac{R_2}{R_1} = \frac{V_3(V_{th2} - V_{H2})}{V_1(V_{th1} - V_{H1})} - 1 \qquad \frac{R_3}{R_1} = \frac{V_3(V_1 - V_{th1} + V_{H1})}{V_1(V_{th2} - V_{H2})}$$

$$\frac{R_2}{R_1} = \frac{V_4 \times V_{th1}}{V_2 \times V_{th2}} - 1 \qquad \frac{R_3}{R_1} = \frac{V_4(V_2 - V_{th1})}{V_2 \times V_{th2}}$$

Figure 20. Positive Voltage Window Detector

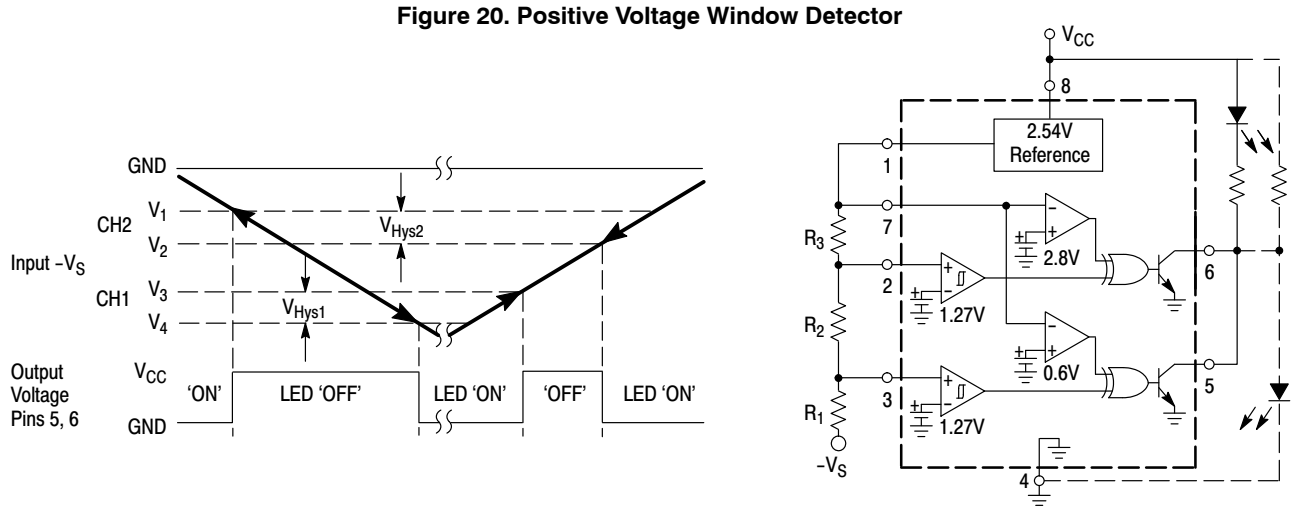

The above figure shows the MC34161 configured as a negative voltage window detector. When the input voltage $-V_S$ falls out of the window established by V_1 and V_4, the LED will turn 'ON'. As the input voltage falls within the window, $-V_S$ increasing from ground and exceeding V_2, or $-V_S$ decreasing from the peak towards ground and falling below V_3, the LED will turn 'OFF'. With the dashed line output connection, the LED will turn 'ON' when the input voltage $-V_S$ is within the window.

For known resistor values, the voltage trip points are:

$$V_1 = \frac{R_1(V_{th2} - V_{ref})}{R_2 + R_3} + V_{th2}$$

$$V_2 = \frac{R_1(V_{th2} - V_{H2} - V_{ref})}{R_2 + R_3} + V_{th2} - V_{H2}$$

$$V_3 = \frac{(R_1 + R_2)(V_{th1} - V_{ref})}{R_3} + V_{th1}$$

$$V_4 = \frac{(R_1 + R_2)(V_{th1} - V_{H1} - V_{ref})}{R_3} + V_{th1} - V_{H1}$$

For a specific trip voltage, the required resistor ratio is:

$$\frac{R_1}{R_2 + R_3} = \frac{V_1 - V_{th2}}{V_{th2} - V_{ref}}$$

$$\frac{R_1}{R_2 + R_3} = \frac{V_2 - V_{th2} + V_{H2}}{V_{th2} - V_{H2} - V_{ref}}$$

$$\frac{R_3}{R_1 + R_2} = \frac{V_{th1} - V_{ref}}{V_3 - V_{th1}}$$

$$\frac{R_3}{R_1 + R_2} = \frac{V_{th1} - V_{H1} - V_{ref}}{V_4 + V_{H1} - V_{th1}}$$

Figure 21. Negative Voltage Window Detector

Share Feedback
Your Opinion Matters

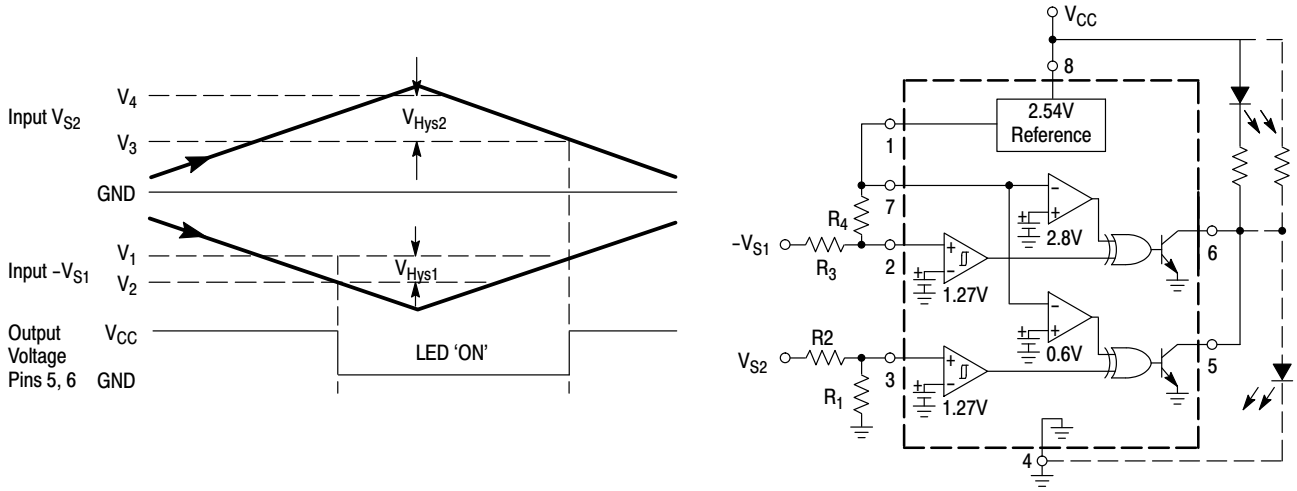

The above figure shows the MC34161 configured as a positive and negative overvoltage detector. As the input voltage increases from ground, the LED will turn 'ON' when either $-V_{S1}$ exceeds V_2, or V_{S2} exceeds V_4. With the dashed line output connection, the circuit becomes a positive and negative undervoltage detector. As the input voltage decreases from the peak towards ground, the LED will turn 'ON' when either V_{S2} falls below V_3, or $-V_{S1}$ falls below V_1.

For known resistor values, the voltage trip points are:

$$V_1 = \frac{R_3}{R_4}(V_{th1} - V_{ref}) + V_{th1} \qquad V_3 = (V_{th2} - V_{H2})\left(\frac{R_2}{R_1} + 1\right)$$

$$V_2 = \frac{R_3}{R_4}(V_{th1} - V_{H1} - V_{ref}) + V_{th1} - V_{H1} \qquad V_4 = V_{th2}\left(\frac{R_2}{R_1} + 1\right)$$

For a specific trip voltage, the required resistor ratio is:

$$\frac{R_3}{R_4} = \frac{(V_1 - V_{th1})}{(V_{th1} - V_{ref})} \qquad \frac{R_2}{R_1} = \frac{V_4}{V_{th2}} - 1$$

$$\frac{R_3}{R_4} = \frac{(V_2 - V_{th1} + V_{H1})}{(V_{th1} - V_{H1} - V_{ref})} \qquad \frac{R_2}{R_1} = \frac{V_3}{V_{th2} - V_{H2}} - 1$$

Figure 22. Positive and Negative Overvoltage Detector

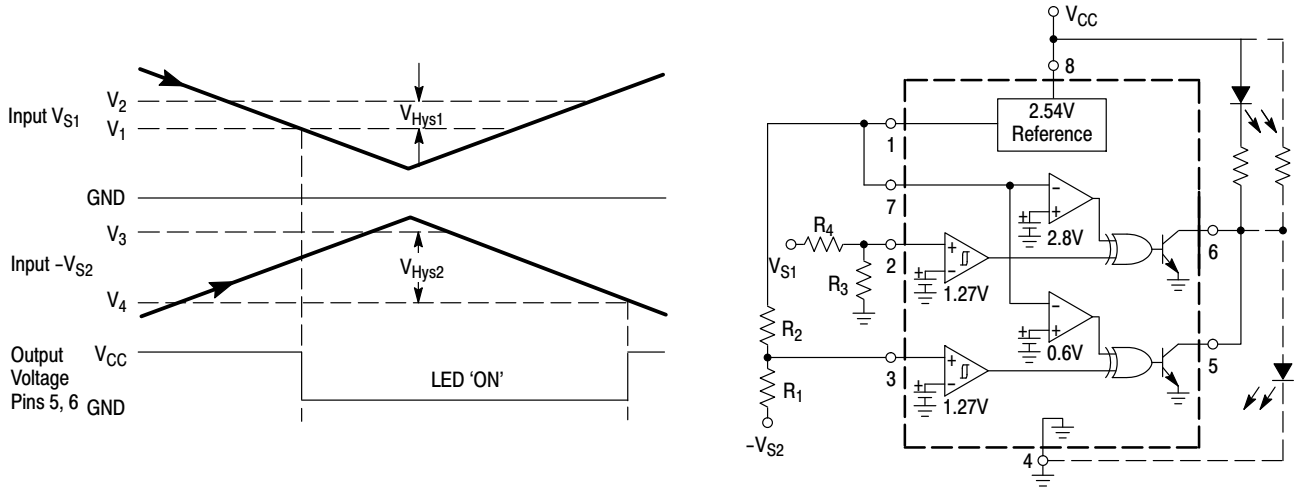

The above figure shows the MC34161 configured as a positive and negative undervoltage detector. As the input voltage decreases toward ground, the LED will turn 'ON' when either V_{S1} falls below V_1, or $-V_{S2}$ falls below V_3. With the dashed line output connection, the circuit becomes a positive and negative overvoltage detector. As the input voltage increases from the ground, the LED will turn 'ON' when either V_{S1} exceeds V_2, or $-V_{S1}$ exceeds V_1.

For known resistor values, the voltage trip points are:

$$V_1 = (V_{th1} - V_{H1})\left(\frac{R_4}{R_3} + 1\right) \qquad V_3 = \frac{R_1}{R_2}(V_{th} - V_{ref}) + V_{th2}$$

$$V_2 = V_{th1}\left(\frac{R_4}{R_3} + 1\right) \qquad V_4 = \frac{R_1}{R_2}(V_{th} - V_{H2} - V_{ref}) + V_{th2} - V_{H2}$$

For a specific trip voltage, the required resistor ratio is:

$$\frac{R_4}{R_3} = \frac{V_2}{V_{th1}} - 1 \qquad \frac{R_1}{R_2} = \frac{V_4 + V_{H2} - V_{th2}}{V_{th2} - V_{H2} - V_{ref}}$$

$$\frac{R_4}{R_3} = \frac{V_1}{V_{th1} - V_{H1}} - 1 \qquad \frac{R_1}{R_2} = \frac{V_3 - V_{th2}}{V_{th2} - V_{ref}}$$

Figure 23. Positive and Negative Undervoltage Detector

Share Feedback
Your Opinion Matters

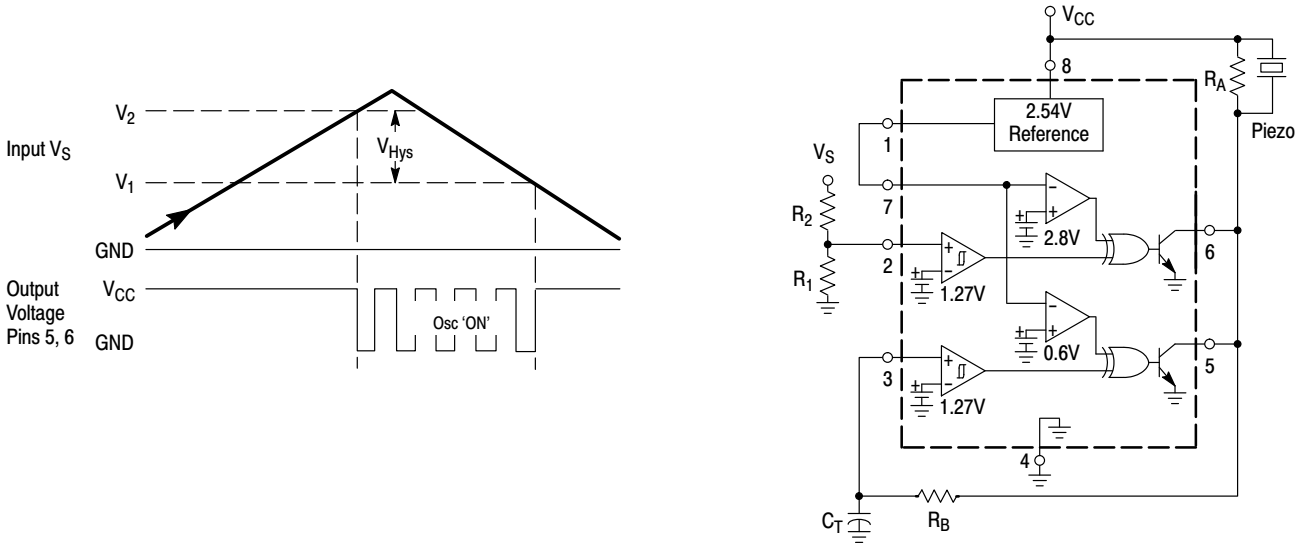

The above figure shows the MC34161 configured as an overvoltage detector with an audio alarm. Channel 1 monitors input voltage V_S while channel 2 is connected as a simple RC oscillator. As the input voltage increases from ground, the output of channel 1 allows the oscillator to turn 'ON' when V_S exceeds V_2.

For known resistor values, the voltage trip points are:

$$V_1 = (V_{th} - V_H)\left(\frac{R_2}{R_1} + 1\right) \quad V_2 = V_{th}\left(\frac{R_2}{R_1} + 1\right)$$

For a specific trip voltage, the required resistor ratio is:

$$\frac{R_2}{R_1} = \frac{V_1}{V_{th} - V_H} - 1 \quad \frac{R_2}{R_1} = \frac{V_2}{V_{th}} - 1$$

Figure 24. Overvoltage Detector with Audio Alarm

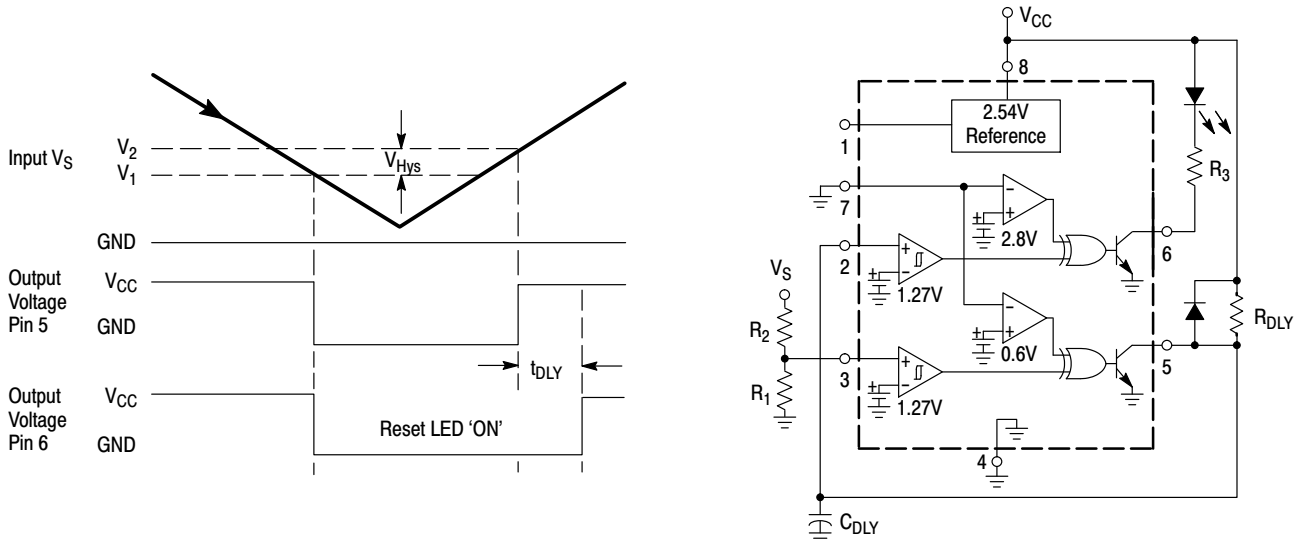

The above figure shows the MC34161 configured as a microprocessor reset with a time delay. Channel 2 monitors input voltage V_S while channel 1 performs the time delay function. As the input voltage decreases towards ground, the output of channel 2 quickly discharges C_{DLY} when V_S falls below V_1. As the input voltage increases from ground, the output of channel 2 allows R_{DLY} to charge C_{DLY} when V_S exceeds V_2.

For known resistor values, the voltage trip points are:

$$V_1 = (V_{th} - V_H)\left(\frac{R_2}{R_1} + 1\right) \quad V_2 = V_{th}\left(\frac{R_2}{R_1} + 1\right)$$

For a specific trip voltage, the required resistor ratio is:

$$\frac{R_2}{R_1} = \frac{V_1}{V_{th} - V_H} - 1 \quad \frac{R_2}{R_1} = \frac{V_2}{V_{th}} - 1$$

For known R_{DLY} C_{DLY} values, the reset time delay is:

$$t_{DLY} = R_{DLY}C_{DLY} \ln\left(\frac{1}{1 - \frac{V_{th}}{V_{CC}}}\right)$$

Figure 25. Microprocessor Reset with Time Delay

Share Feedback
Your Opinion Matters

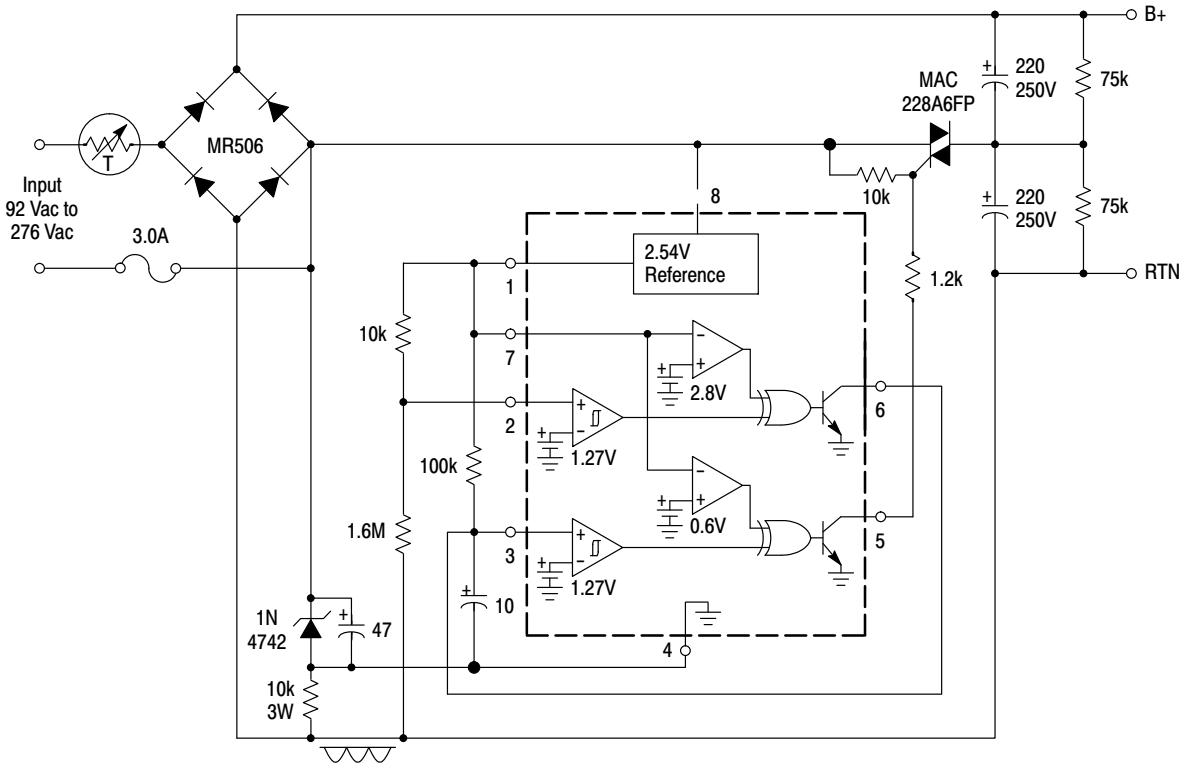

The above circuit shows the MC34161 configured as an automatic line voltage selector. The IC controls the triac, enabling the circuit to function as a fullwave voltage doubler or a fullwave bridge. Channel 1 senses the negative half cycles of the AC line voltage. If the line voltage is less than150 V, the circuit will switch from bridge mode to voltage doubling mode after a preset time delay. The delay is controlled by the 100 kΩ resistor and the 10 μF capacitor. If the line voltage is greater than 150 V, the circuit will immediately return to fullwave bridge mode.

Figure 26. Automatic AC Line Voltage Selector

Share Feedback
Your Opinion Matters

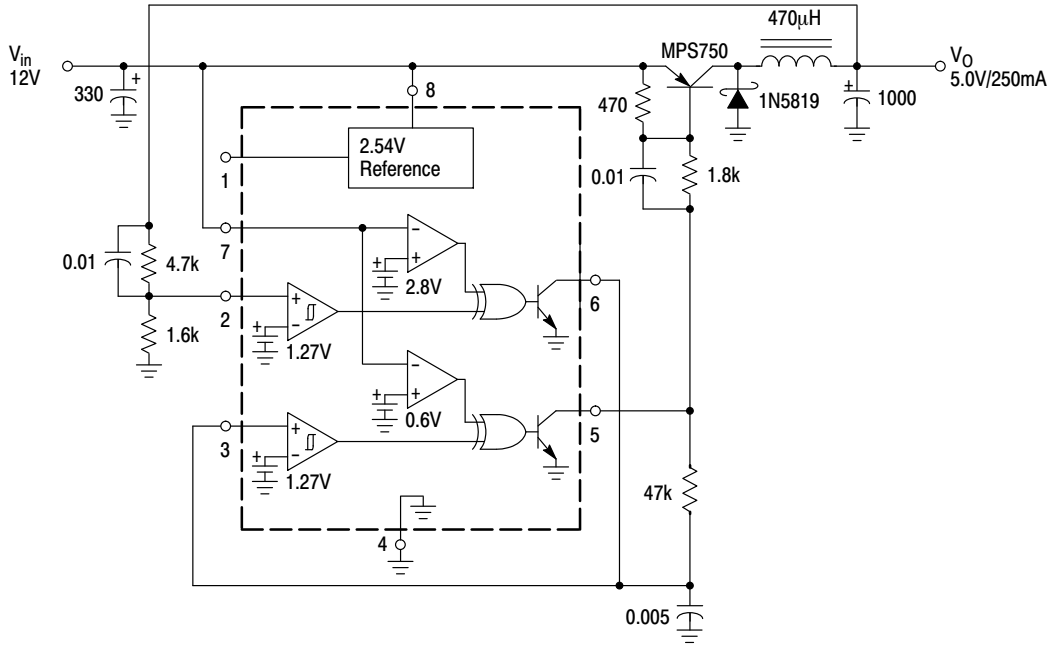

Figure 27. Step−Down Converter

Test	Conditions	Results
Line Regulation	V_{in} = 9.5 V to 24 V, I_O = 250 mA	40 mV = ±0.1%
Load Regulation	V_{in} = 12 V, I_O = 0.25 mA to 250 mA	2.0 mV = ±0.2%
Output Ripple	V_{in} = 12 V, I_O = 250 mA	50 mVpp
Efficiency	V_{in} = 12 V, I_O = 250 mA	87.8%

The above figure shows the MC34161 configured as a step−down converter. Channel 1 monitors the output voltage while Channel 2 performs the oscillator function. Upon initial powerup, the converters output voltage will be below nominal, and the output of Channel 1 will allow the oscillator to run. The external switch transistor will eventually pump−up the output capacitor until its voltage exceeds the input threshold of Channel 1. The output of Channel 1 will then switch low and disable the oscillator. The oscillator will commence operation when the output voltage falls below the lower threshold of Channel 1.

Share Feedback
Your Opinion Matters

ORDERING INFORMATION

Device	Package	Shipping†
MC34161PG	PDIP−8 (Pb−Free)	50 Units / Rail
MC34161DG	SOIC−8 (Pb−Free)	98 Units / Rail
MC34161DR2G		2500 / Tape & Reel
MC34161DMR2G	Micro8 (Pb−Free)	4000 / Tape & Reel
MC33161PG	PDIP−8 (Pb−Free)	50 Units / Rail
MC33161DG	SOIC−8 (Pb−Free)	98 Units / Rail
MC33161DR2G		2500 / Tape & Reel
NCV33161DR2G*		2500 / Tape & Reel
MC33161DMR2G	Micro8 (Pb−Free)	4000 / Tape & Reel
NCV33161DMR2G*		4000 / Tape & Reel

†For information on tape and reel specifications, including part orientation and tape sizes, please refer to our Tape and Reel Packaging Specifications Brochure, BRD8011/D.

*NCV: T_{low} = −40°C, T_{high} = +125°C. Guaranteed by design. NCV Prefix for Automotive and Other Applications Requiring Unique Site and Control Change Requirements; AEC−Q100 Qualified and PPAP Capable.

Share Feedback
Your Opinion Matters

SCALE 1:1

SOIC−8 NB
CASE 751−07
ISSUE AK

DATE 16 FEB 2011

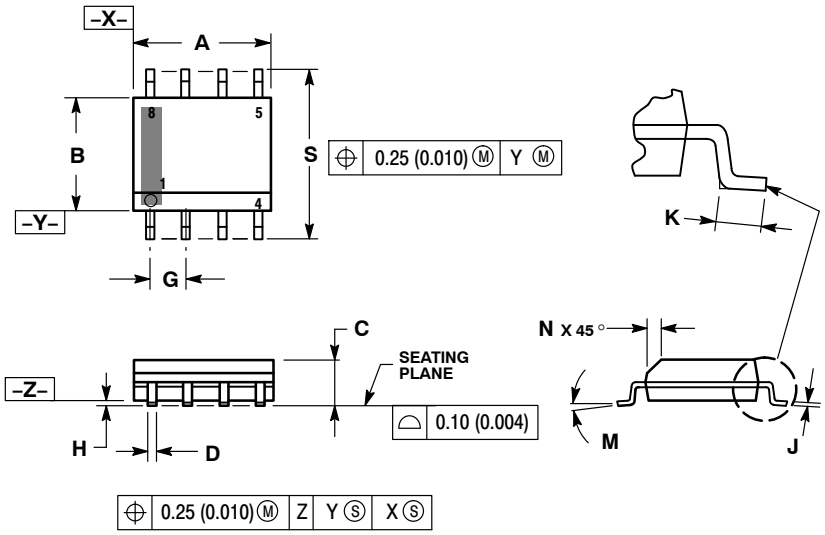

NOTES:
1. DIMENSIONING AND TOLERANCING PER ANSI Y14.5M, 1982.
2. CONTROLLING DIMENSION: MILLIMETER.
3. DIMENSION A AND B DO NOT INCLUDE MOLD PROTRUSION.
4. MAXIMUM MOLD PROTRUSION 0.15 (0.006) PER SIDE.
5. DIMENSION D DOES NOT INCLUDE DAMBAR PROTRUSION. ALLOWABLE DAMBAR PROTRUSION SHALL BE 0.127 (0.005) TOTAL IN EXCESS OF THE D DIMENSION AT MAXIMUM MATERIAL CONDITION.
6. 751−01 THRU 751−06 ARE OBSOLETE. NEW STANDARD IS 751−07.

	MILLIMETERS		INCHES	
DIM	MIN	MAX	MIN	MAX
A	4.80	5.00	0.189	0.197
B	3.80	4.00	0.150	0.157
C	1.35	1.75	0.053	0.069
D	0.33	0.51	0.013	0.020
G	1.27 BSC		0.050 BSC	
H	0.10	0.25	0.004	0.010
J	0.19	0.25	0.007	0.010
K	0.40	1.27	0.016	0.050
M	0 °	8 °	0 °	8 °
N	0.25	0.50	0.010	0.020
S	5.80	6.20	0.228	0.244

SOLDERING FOOTPRINT*

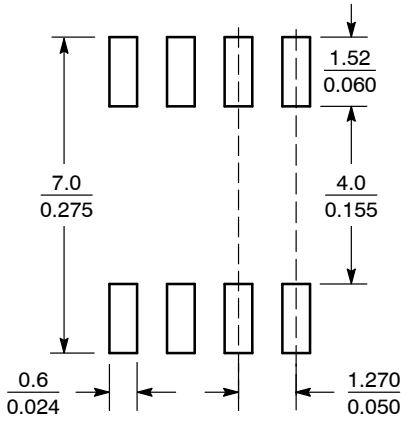

SCALE 6:1 (mm / inches)

*For additional information on our Pb−Free strategy and soldering details, please download the **onsemi** Soldering and Mounting Techniques Reference Manual, SOLDERRM/D.

GENERIC MARKING DIAGRAM*

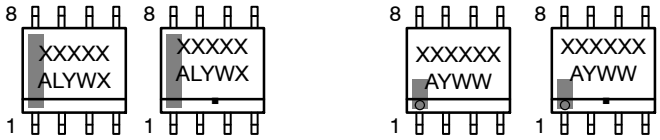

XXXXX = Specific Device Code
A = Assembly Location
L = Wafer Lot
Y = Year
W = Work Week
▪ = Pb−Free Package

XXXXXX = Specific Device Code
A = Assembly Location
Y = Year
WW = Work Week
▪ = Pb−Free Package

*This information is generic. Please refer to device data sheet for actual part marking. Pb−Free indicator, "G" or microdot "▪", may or may not be present. Some products may not follow the Generic Marking.

STYLES ON PAGE 2

DOCUMENT NUMBER:	98ASB42564B	Electronic versions are uncontrolled except when accessed directly from the Document Repository. Printed versions are uncontrolled except when stamped "CONTROLLED COPY" in red.
DESCRIPTION:	SOIC−8 NB	PAGE 1 OF 2

onsemi and onsemi are trademarks of Semiconductor Components Industries, LLC dba **onsemi** or its subsidiaries in the United States and/or other countries. **onsemi** reserves the right to make changes without further notice to any products herein. **onsemi** makes no warranty, representation or guarantee regarding the suitability of its products for any particular purpose, nor does **onsemi** assume any liability arising out of the application or use of any product or circuit, and specifically disclaims any and all liability, including without limitation special, consequential or incidental damages. **onsemi** does not convey any license under its patent rights nor the rights of others.

SOIC−8 NB
CASE 751−07
ISSUE AK

DATE 16 FEB 2011

STYLE 1:
PIN 1. EMITTER
2. COLLECTOR
3. COLLECTOR
4. EMITTER
5. EMITTER
6. BASE
7. BASE
8. EMITTER

STYLE 2:
PIN 1. COLLECTOR, DIE, #1
2. COLLECTOR, #1
3. COLLECTOR, #2
4. COLLECTOR, #2
5. BASE, #2
6. EMITTER, #2
7. BASE, #1
8. EMITTER, #1

STYLE 3:
PIN 1. DRAIN, DIE #1
2. DRAIN, #1
3. DRAIN, #2
4. DRAIN, #2
5. GATE, #2
6. SOURCE, #2
7. GATE, #1
8. SOURCE, #1

STYLE 4:
PIN 1. ANODE
2. ANODE
3. ANODE
4. ANODE
5. ANODE
6. ANODE
7. ANODE
8. COMMON CATHODE

STYLE 5:
PIN 1. DRAIN
2. DRAIN
3. DRAIN
4. DRAIN
5. GATE
6. GATE
7. SOURCE
8. SOURCE

STYLE 6:
PIN 1. SOURCE
2. DRAIN
3. DRAIN
4. SOURCE
5. SOURCE
6. GATE
7. GATE
8. SOURCE

STYLE 7:
PIN 1. INPUT
2. EXTERNAL BYPASS
3. THIRD STAGE SOURCE
4. GROUND
5. DRAIN
6. GATE 3
7. SECOND STAGE Vd
8. FIRST STAGE Vd

STYLE 8:
PIN 1. COLLECTOR, DIE #1
2. BASE, #1
3. BASE, #2
4. COLLECTOR, #2
5. COLLECTOR, #2
6. EMITTER, #2
7. EMITTER, #1
8. COLLECTOR, #1

STYLE 9:
PIN 1. EMITTER, COMMON
2. COLLECTOR, DIE #1
3. COLLECTOR, DIE #2
4. EMITTER, COMMON
5. EMITTER, COMMON
6. BASE, DIE #2
7. BASE, DIE #1
8. EMITTER, COMMON

STYLE 10:
PIN 1. GROUND
2. BIAS 1
3. OUTPUT
4. GROUND
5. GROUND
6. BIAS 2
7. INPUT
8. GROUND

STYLE 11:
PIN 1. SOURCE 1
2. GATE 1
3. SOURCE 2
4. GATE 2
5. DRAIN 2
6. DRAIN 2
7. DRAIN 1
8. DRAIN 1

STYLE 12:
PIN 1. SOURCE
2. SOURCE
3. SOURCE
4. GATE
5. DRAIN
6. DRAIN
7. DRAIN
8. DRAIN

STYLE 13:
PIN 1. N.C.
2. SOURCE
3. SOURCE
4. GATE
5. DRAIN
6. DRAIN
7. DRAIN
8. DRAIN

STYLE 14:
PIN 1. N−SOURCE
2. N−GATE
3. P−SOURCE
4. P−GATE
5. P−DRAIN
6. P−DRAIN
7. N−DRAIN
8. N−DRAIN

STYLE 15:
PIN 1. ANODE 1
2. ANODE 1
3. ANODE 1
4. ANODE 1
5. CATHODE, COMMON
6. CATHODE, COMMON
7. CATHODE, COMMON
8. CATHODE, COMMON

STYLE 16:
PIN 1. EMITTER, DIE #1
2. BASE, DIE #1
3. EMITTER, DIE #2
4. BASE, DIE #2
5. COLLECTOR, DIE #2
6. COLLECTOR, DIE #2
7. COLLECTOR, DIE #1
8. COLLECTOR, DIE #1

STYLE 17:
PIN 1. VCC
2. V2OUT
3. V1OUT
4. TXE
5. RXE
6. VEE
7. GND
8. ACC

STYLE 18:
PIN 1. ANODE
2. ANODE
3. SOURCE
4. GATE
5. DRAIN
6. DRAIN
7. CATHODE
8. CATHODE

STYLE 19:
PIN 1. SOURCE 1
2. GATE 1
3. SOURCE 2
4. GATE 2
5. DRAIN 2
6. MIRROR 2
7. DRAIN 1
8. MIRROR 1

STYLE 20:
PIN 1. SOURCE (N)
2. GATE (N)
3. SOURCE (P)
4. GATE (P)
5. DRAIN
6. DRAIN
7. DRAIN
8. DRAIN

STYLE 21:
PIN 1. CATHODE 1
2. CATHODE 2
3. CATHODE 3
4. CATHODE 4
5. CATHODE 5
6. COMMON ANODE
7. COMMON ANODE
8. CATHODE 6

STYLE 22:
PIN 1. I/O LINE 1
2. COMMON CATHODE/VCC
3. COMMON CATHODE/VCC
4. I/O LINE 3
5. COMMON ANODE/GND
6. I/O LINE 4
7. I/O LINE 5
8. COMMON ANODE/GND

STYLE 23:
PIN 1. LINE 1 IN
2. COMMON ANODE/GND
3. COMMON ANODE/GND
4. LINE 2 IN
5. LINE 2 OUT
6. COMMON ANODE/GND
7. COMMON ANODE/GND
8. LINE 1 OUT

STYLE 24:
PIN 1. BASE
2. EMITTER
3. COLLECTOR/ANODE
4. COLLECTOR/ANODE
5. CATHODE
6. CATHODE
7. COLLECTOR/ANODE
8. COLLECTOR/ANODE

STYLE 25:
PIN 1. VIN
2. N/C
3. REXT
4. GND
5. IOUT
6. IOUT
7. IOUT
8. IOUT

STYLE 26:
PIN 1. GND
2. dv/dt
3. ENABLE
4. ILIMIT
5. SOURCE
6. SOURCE
7. SOURCE
8. VCC

STYLE 27:
PIN 1. ILIMIT
2. OVLO
3. UVLO
4. INPUT+
5. SOURCE
6. SOURCE
7. SOURCE
8. DRAIN

STYLE 28:
PIN 1. SW_TO_GND
2. DASIC_OFF
3. DASIC_SW_DET
4. GND
5. V_MON
6. VBULK
7. VBULK
8. VIN

STYLE 29:
PIN 1. BASE, DIE #1
2. EMITTER, #1
3. BASE, #2
4. EMITTER, #2
5. COLLECTOR, #2
6. COLLECTOR, #2
7. COLLECTOR, #1
8. COLLECTOR, #1

STYLE 30:
PIN 1. DRAIN 1
2. DRAIN 1
3. GATE 2
4. SOURCE 2
5. SOURCE 1/DRAIN 2
6. SOURCE 1/DRAIN 2
7. SOURCE 1/DRAIN 2
8. GATE 1

DOCUMENT NUMBER:	98ASB42564B	Electronic versions are uncontrolled except when accessed directly from the Document Repository. Printed versions are uncontrolled except when stamped "CONTROLLED COPY" in red.
DESCRIPTION:	SOIC−8 NB	PAGE 2 OF 2

onsemi and onsemi are trademarks of Semiconductor Components Industries, LLC dba **onsemi** or its subsidiaries in the United States and/or other countries. **onsemi** reserves the right to make changes without further notice to any products herein. **onsemi** makes no warranty, representation or guarantee regarding the suitability of its products for any particular purpose, nor does **onsemi** assume any liability arising out of the application or use of any product or circuit, and specifically disclaims any and all liability, including without limitation special, consequential or incidental damages. **onsemi** does not convey any license under its patent rights nor the rights of others.

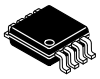

SCALE 2:1

Micro8
CASE 846A−02
ISSUE K

DATE 16 JUL 2020

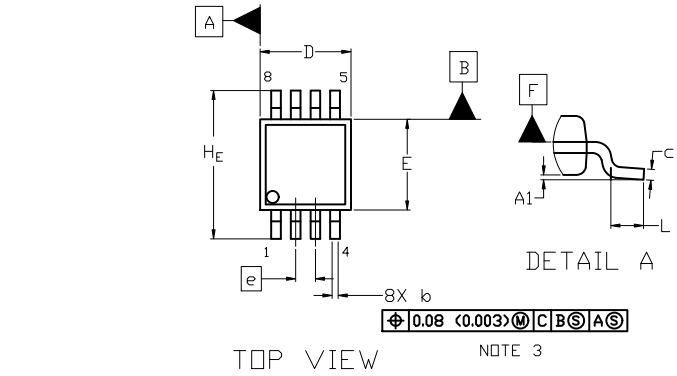

NOTES:

1. DIMENSIONING AND TOLERANCING PER ASME Y14.5M, 2009.
2. CONTROLLING DIMENSION: MILLIMETERS
3. DIMENSION b DOES NOT INCLUDE DAMBAR PROTRUSION. ALLOWABLE PROTRUSION SHALL BE 0.10 mm IN EXCESS OF MAXIMUM MATERIAL CONDITION.
4. DIMENSIONS D AND E DO NOT INCLUDE MOLD FLASH, PROTRUSION OR GATE BURRS. MOLD FLASH, PROTRUSIONS, OR GATE BURRS SHALL NOT EXCEED 0.15 mm PER SIDE. DIMENSION E DOES NOT INCLUDE INTERLEAD FLASH OR PROTRUSION. INTERLEAD FLASH OR PROTRUSION SHALL NOT EXCEED 0.25 mm PER SIDE. DIMENSIONS D AND E ARE DETERMINED AT DATUM F.
5. DATUMS A AND B ARE TO BE DETERMINED AT DATUM F.
6. A1 IS DEFINED AS THE VERTICAL DISTANCE FROM THE SEATING PLANE TO THE LOWEST POINT ON THE PACKAGE BODY.

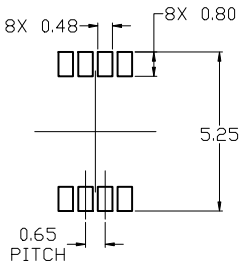

RECOMMENDED
MOUNTING FOOTPRINT

* For additional information on our Pb-Free strategy and soldering details, please download the ON Semiconductor Soldering and Mounting Techniques Reference Manual, SOLDERRM/D.

DIM	MILLIMETERS		
	MIN.	NOM.	MAX.
A	---	---	1.10
A1	0.05	0.08	0.15
b	0.25	0.33	0.40
c	0.13	0.18	0.23
D	2.90	3.00	3.10
E	2.90	3.00	3.10
e	0.65 BSC		
H_E	4.75	4.90	5.05
L	0.40	0.55	0.70

GENERIC
MARKING DIAGRAM*

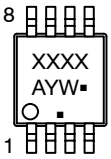

XXXX = Specific Device Code
A = Assembly Location
Y = Year
W = Work Week
▪ = Pb−Free Package

(Note: Microdot may be in either location)

*This information is generic. Please refer to device data sheet for actual part marking. Pb−Free indicator, "G" or microdot "▪", may or may not be present. Some products may not follow the Generic Marking.

STYLE 1:
PIN 1. SOURCE
2. SOURCE
3. SOURCE
4. GATE
5. DRAIN
6. DRAIN
7. DRAIN
8. DRAIN

STYLE 2:
PIN 1. SOURCE 1
2. GATE 1
3. SOURCE 2
4. GATE 2
5. DRAIN 2
6. DRAIN 2
7. DRAIN 1
8. DRAIN 1

STYLE 3:
PIN 1. N-SOURCE
2. N-GATE
3. P-SOURCE
4. P-GATE
5. P-DRAIN
6. P-DRAIN
7. N-DRAIN
8. N-DRAIN

DOCUMENT NUMBER:	98ASB14087C	Electronic versions are uncontrolled except when accessed directly from the Document Repository. Printed versions are uncontrolled except when stamped "CONTROLLED COPY" in red.	
DESCRIPTION:	MICRO8		PAGE 1 OF 1

onsemi and onsemi are trademarks of Semiconductor Components Industries, LLC dba **onsemi** or its subsidiaries in the United States and/or other countries. **onsemi** reserves the right to make changes without further notice to any products herein. **onsemi** makes no warranty, representation or guarantee regarding the suitability of its products for any particular purpose, nor does **onsemi** assume any liability arising out of the application or use of any product or circuit, and specifically disclaims any and all liability, including without limitation special, consequential or incidental damages. **onsemi** does not convey any license under its patent rights nor the rights of others.

onsemi, onsemi, and other names, marks, and brands are registered and/or common law trademarks of Semiconductor Components Industries, LLC dba "**onsemi**" or its affiliates and/or subsidiaries in the United States and/or other countries. **onsemi** owns the rights to a number of patents, trademarks, copyrights, trade secrets, and other intellectual property. A listing of **onsemi**'s product/patent coverage may be accessed at www.onsemi.com/site/pdf/Patent−Marking.pdf. **onsemi** reserves the right to make changes at any time to any products or information herein, without notice. The information herein is provided "as−is" and **onsemi** makes no warranty, representation or guarantee regarding the accuracy of the information, product features, availability, functionality, or suitability of its products for any particular purpose, nor does **onsemi** assume any liability arising out of the application or use of any product or circuit, and specifically disclaims any and all liability, including without limitation special, consequential or incidental damages. Buyer is responsible for its products and applications using **onsemi** products, including compliance with all laws, regulations and safety requirements or standards, regardless of any support or applications information provided by **onsemi**. "Typical" parameters which may be provided in **onsemi** data sheets and/or specifications can and do vary in different applications and actual performance may vary over time. All operating parameters, including "Typicals" must be validated for each customer application by customer's technical experts. **onsemi** does not convey any license under any of its intellectual property rights nor the rights of others. **onsemi** products are not designed, intended, or authorized for use as a critical component in life support systems or any FDA Class 3 medical devices or medical devices with a same or similar classification in a foreign jurisdiction or any devices intended for implantation in the human body. Should Buyer purchase or use **onsemi** products for any such unintended or unauthorized application, Buyer shall indemnify and hold **onsemi** and its officers, employees, subsidiaries, affiliates, and distributors harmless against all claims, costs, damages, and expenses, and reasonable attorney fees arising out of, directly or indirectly, any claim of personal injury or death associated with such unintended or unauthorized use, even if such claim alleges that **onsemi** was negligent regarding the design or manufacture of the part. **onsemi** is an Equal Opportunity/Affirmative Action Employer. This literature is subject to all applicable copyright laws and is not for resale in any manner.

ADDITIONAL INFORMATION

TECHNICAL PUBLICATIONS:
Technical Library: www.onsemi.com/design/resources/technical−documentation
onsemi Website: www.onsemi.com

ONLINE SUPPORT: www.onsemi.com/support
For additional information, please contact your local Sales Representative at
www.onsemi.com/support/sales