THIS COPY IS PROVIDED ON A RESTRICTED BASIS AND IS NOT TO BE USED IN ANY WAY DETRIMENTAL TO THE INTERESTS OF PANDUIT CORP.

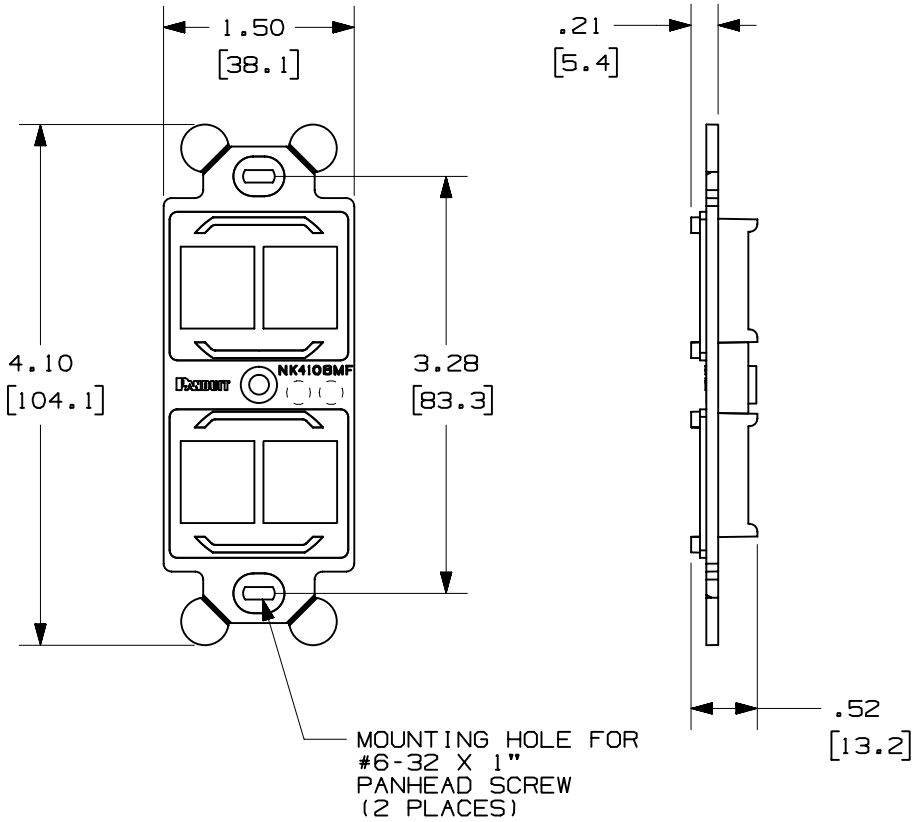

PANDUIT P/N	WEIGHT
NK4106MF**	.03 lb EACH (12.2 g EACH)

NOTES:
1. SEE CURRENT CATALOG FOR ADDITIONAL PART NUMBER SUFFIXES TO INDICATE COLOR AND OR PACKAGE QUANTITY.
2. FRAME ACCEPTS FOUR 4 NETKEY™ MODULES.
3. DIMENSIONS IN PARENTHESES ARE IN METRIC.
4. (2) #6-32 x 1" PANHEAD SCREWS ARE SUPPLIED.

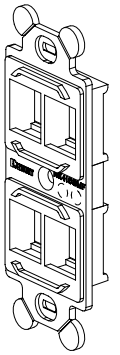

REV	DATE	BY	CHK	DESCRIPTION	ECN - R	CUST	SUP	OTH
1	10-18-02	JsP		A. REVISED TITLE.	38378-03			
R	11-30-01	JBN	PM	RELEASED TO PRODUCTION	38378-03			

MODEL FILENAME: D38378BA_NK410MF_04.PRT
DRAWING FILENAME: D38378BA_DC_04B.PRT
SIZE: A

NETKEY™ 4 POSITION "106" STYLE MODULE FRAME CUSTOMER DRAWING

PANDUIT® CORP.
TINLEY PARK, IL 60477

THIRD ANGLE PROJECTION

ALL DIMENSIONS ARE GIVEN IN INCHES, UNLESS OTHERWISE SPECIFIED.
DIMENSIONAL TOLERANCES ARE:
(.X) ±.03 (.XXX) ±.005
(.XX) ±.01 ANGLES ± 1°

DRAWN BY: JsP
DATE: 11-30-01
CHK'D: PM
MATERIAL: ABS

I.I. NUMBER: N/A
PRODUCT SPEC: N/A
WORK INSTRUCTION: N/A
SCALE: NONE
PART NO.: NK4106MF**
DRAWING NO.: 38378-03