General Description

The IDT8N3QV01 is a Quad-Frequency Programmable VCXO with very flexible frequency and pull-range programming capabilities. The device uses IDT's fourth generation FemtoClock® NG technology for an optimum of high clock frequency and low phase noise performance. The device accepts 2.5V or 3.3V supply and is packaged in a small, lead-free (RoHS 6) 10-lead Ceramic 5mm x 7mm x 1.55mm package.

Besides the 4 default power-up frequencies set by the FSEL0 and FSEL1 pins, the IDT8N3QV01 can be programmed via the I²C interface to any output clock frequency between 15.476MHz to 866.67MHz and from 975MHz to 1,300MHz to a very high degree of precision with a frequency step size of 435.9Hz ÷*N* (*N* is the PLL output divider). Since the FSEL0 and FSEL1 pins are mapped to 4 independent PLL M and N divider registers (P, MINT, MFRAC and N), reprogramming those registers to other frequencies under control of FSEL0 and FSEL1 is supported. The extended temperature range supports wireless infrastructure, tele-communication and networking end equipment requirements. The device is a member of the high-performance clock family from IDT.

Features

- Fourth generation FemtoClock® NG technology
- Programmable clock output frequency from 15.476MHz to 866.67MHz and from 975MHz to 1,300MHz
- Four power-up default frequencies (see part number order codes), reprogrammable by I²C
- I²C programming interface for the output clock frequency, APR and internal PLL control registers
- Frequency programming resolution is 435.9Hz ÷*N*
- Absolute pull-range (APR) programmable from ±4.5 to ±754.5ppm
- One 2.5V or 3.3V LVPECL differential clock output
- Two control inputs for the power-up default frequency
- LVCMOS/LVTTL compatible control inputs
- RMS phase jitter @ 156.25MHz (12kHz - 20MHz): 0.487ps (typical)
- RMS phase jitter @ 156.25MHz (1kHz - 40MHz): 0.614ps (typical)
- 2.5V or 3.3V supply voltage modes
- -40°C to 85°C ambient operating temperature
- Available in Lead-free (RoHS 6) package

Block Diagram

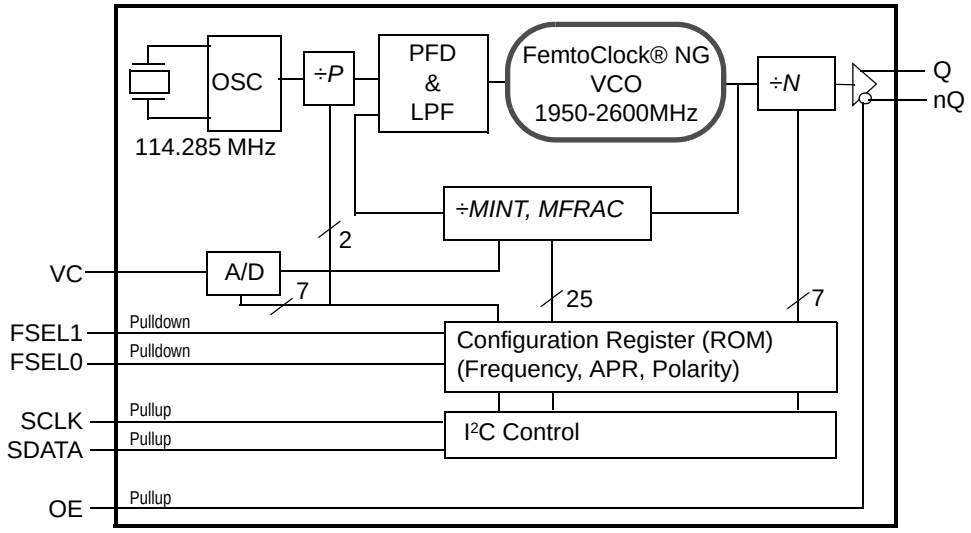

Pin Assignment

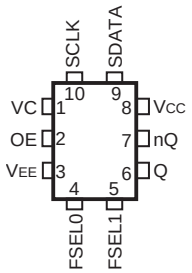

IDT8N3QV01 Rev G
10-lead Ceramic 5mm x 7mm x 1.55mm package body
CD Package
Top View

© 2019 Renesas Electronics Corporation

Table 1. Pin Descriptions

Number	Name	Type		Description
1	VC	Input		VCXO Control Voltage input. The control voltage versus frequency characteristics are set by the ADC_GAIN[5:0] register bits.
2	OE	Input	Pullup	Output enable pin. See Table 3A for function. LVCMOS/LVTTL interface levels.
3	V_{EE}	Power		Negative power supply.
5, 4	FSEL1, FSEL0	Input	Pulldown	Default frequency select pins. See the Default Frequency Order Codes section. LVCMOS/LVTTL interface levels.
6, 7	Q, nQ	Output		Differential clock output. LVPECL interface levels.
8	V_{CC}	Power		Positive power supply.
9	SDATA	Input/Output	Pullup	I^2C data input. Input: LVCMOS/LVTTL interface levels. Output: Open drain.
10	SCLK	Input	Pullup	I^2C clock input. LVCMOS/LVTTL compatible interface levels.

NOTE: *Pullup and Pulldown* refer to internal input resistors. See Table 2, *Pin Characteristics,* for typical values.

Table 2. Pin Characteristics

Symbol	Parameter	Test Conditions	Minimum	Typical	Maximum	Units
C_{IN}	Input Capacitance	FSEL[1:0], SDATA, SCLK		5.5		pF
		VC		10		pF
R_{PULLUP}	Input Pullup Resistor			50		kΩ
$R_{PULLDOWN}$	Input Pulldown Resistor			50		kΩ

© 2019 Renesas Electronics Corporation

Function Tables

Table 3A. Default Frequency Selection

Input		Operation
FSEL1	**FSEL0**	
0 (default)	0 (default)	Default frequency 0
0	1	Default frequency 1
1	0	Default frequency 2
1	1	Default frequency 3

NOTE: The default frequency is the output frequency after power-up. One of four default frequencies is selected by FSEL[1:0]. See programming section for details.

Table 3B. OE Configuration

Input	
OE	**Output Enable**
0	Outputs Q, nQ are in high-impedance state.
1 (default)	Outputs are enabled.

NOTE: OE is an asynchronous control.

© 2019 Renesas Electronics Corporation

Block Diagram with Programming Registers

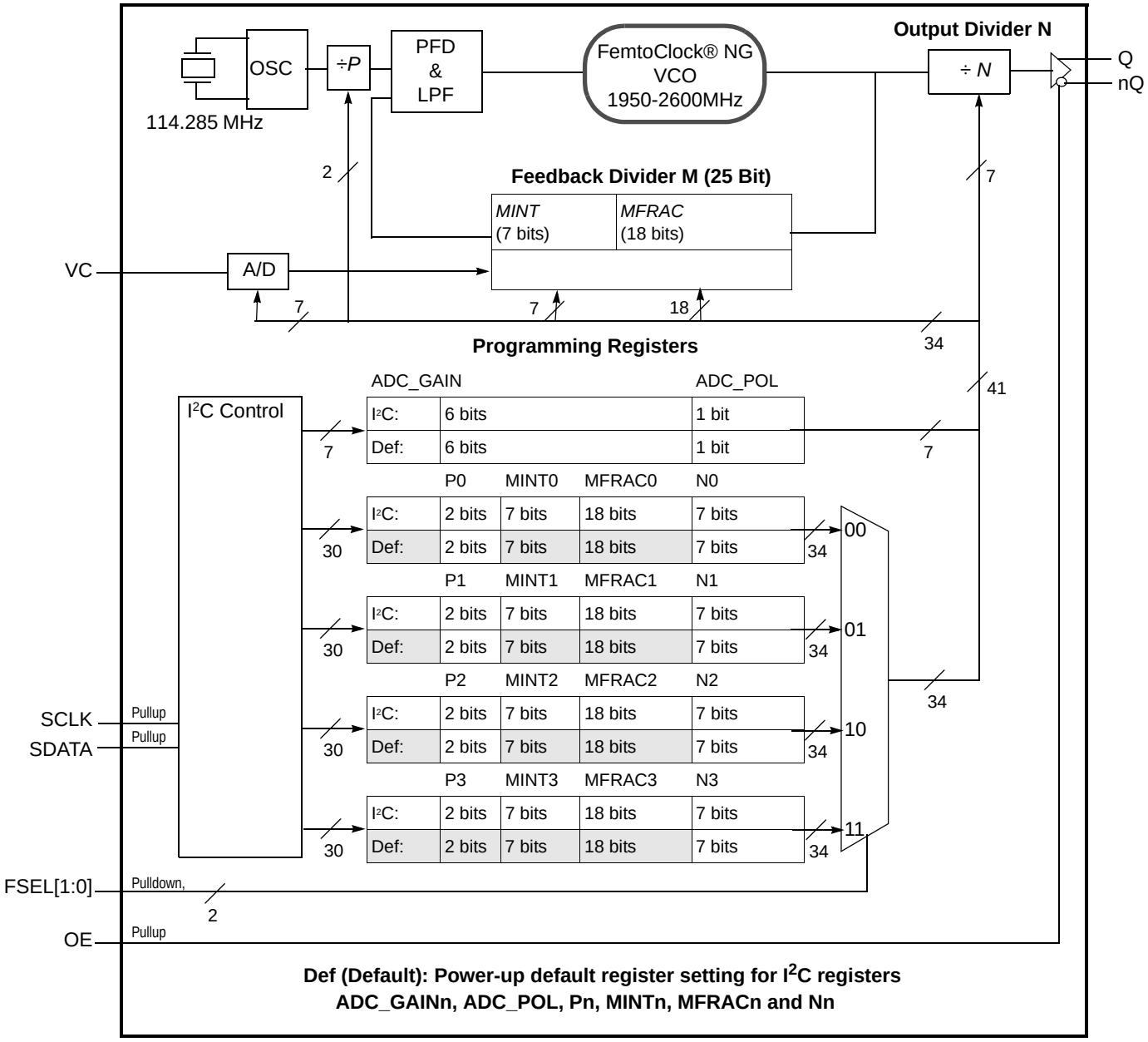

Def (Default): Power-up default register setting for I²C registers ADC_GAINn, ADC_POL, Pn, MINTn, MFRACn and Nn

© 2019 Renesas Electronics Corporation

Principles of Operation

The block diagram consists of the internal 3RD overtone crystal and oscillator which provide the reference clock f_{XTAL} of either 114.285 MHz or 100 MHz. The PLL includes the FemtoClock NG VCO along with the Pre-divider (*P*), the feedback divider (*M*) and the post divider (*N*). The *P*, *M*, and *N* dividers determine the output frequency based on the f_{XTAL} reference and must be configured correctly for proper operation. The feedback divider is fractional supporting a huge number of output frequencies. The configuration of the feedback divider to integer-only values results in an improved output phase noise characteristics at the expense of the range of output frequencies. In addition, internal registers are used to hold up to four different factory pre-set *P*, *M*, and *N* configuration settings. These default pre-sets are stored in the I^2C registers at power-up. Each configuration is selected via the the FSEL[1:0] pins and can be read back using the SCLK and SDATA pins.

The user may choose to operate the device at an output frequency different than that set by the factory. After power-up, the user may write new P, N and M settings into one or more of the four configuration registers and then use the FSEL[1:0] pins to select the newly programmed configuration. Note that the I^2C registers are volatile and a power supply cycle will reload the pre-set factory default conditions.

If the user does choose to write a different *P*, *M*, and *N* configuration, it is recommended to write to a configuration which is not currently selected by FSEL[1:0] and then change to that configuration after the I^2C transaction has completed. Changing the FSEL[1:0] controls results in an immediate change of the output frequency to the selected register values. The *P*, *M*, and *N* frequency configurations support an output frequency range 15.476MHz to 866.67MHz and 975MHz to 1,300MHz.

The devices use the fractional feedback divider with a delta-sigma modulator for noise shaping and robust frequency synthesis capability. The relatively high reference frequency minimizes phase noise generated by frequency multiplication and allows more efficient shaping of noise by the delta-sigma modulator.

The output frequency is determined by the 2-bit pre-divider (*P*), the feedback divider (M) and the 7-bit post divider (*N*). The feedback divider (*M*) consists of both a 7-bit integer portion (*MINT*) and an 18-bit fractional portion (*MFRAC*) and provides the means for high-resolution frequency generation. The output frequency f_{OUT} is calculated by:

$$f_{OUT} = f_{XTAL} \cdot \frac{1}{P \cdot N} \cdot \left[MINT + \frac{MFRAC + 0.5}{2^{18}} \right] \quad (1)$$

The four configuration registers for the *P, M (MINT & MFRAC)* and *N* dividers which are named Pn, MINTn, MFRACn and Nn with n=0 to 3. “n” denominates one of the four possible configurations.

As identified previously, the configurations of *P, M (MINT & MFRAC)* and *N* divider settings are stored the I^2C register, and the configuration loaded at power-up is determined by the FSEL[1:0] pins.

Table 4 Frequency Selection

Input		Selects	Register
FSEL1	**FSEL0**		
0 (def.)	0 (def.)	Frequency 0	P0, MINT0, MFRAC0, N0
0	1	Frequency 1	P1, MINT1, MFRAC1, N1
1	0	Frequency 2	P2, MINT2, MFRAC2, N2
1	1	Frequency 3	P3, MINT3, MFRAC3, N3

Frequency Configuration

An order code is assigned to each frequency configuration programmed by the factory (default frequencies). For more information on the available default frequencies and order codes, please see the Ordering Information Section in this document. For available order codes, see the *FemtoClock NG Ceramic-Package XO and VCXO Ordering Product Information* document.

For more information and guidelines on programming of the device for custom frequency configurations, the register description, the pull range programming and the serial interface description, see the *FemtoClock NG Ceramic 5x7 Module Programming Guide.*

© 2019 Renesas Electronics Corporation

Absolute Maximum Ratings

NOTE: Stresses beyond those listed under *Absolute Maximum Ratings* may cause permanent damage to the device. These ratings are stress specifications only. Functional operation of product at these conditions or any conditions beyond those listed in the *DC Characteristics or AC Characteristics* is not implied. Exposure to absolute maximum rating conditions for extended periods may affect product reliability.

Item	Rating
Supply Voltage, V_{CC}	3.63V
Inputs, V_I	-0.5V to V_{CC} + 0.5V
Outputs, I_O (SDATA) Outputs, I_O (LVPECL) Continuous Current Surge Current	10mA 50mA 100mA
Package Thermal Impedance, θ_{JA}	49.4°C/W (0 mps)
Storage Temperature, T_{STG}	-65°C to 150°C

DC Electrical Characteristics

Table 5A. Power Supply DC Characteristics, V_{CC} = 3.3V ± 5%, V_{EE} = 0V, T_A = -40°C to 85°C

Symbol	Parameter	Test Conditions	Minimum	Typical	Maximum	Units
V_{CC}	Positive Supply Voltage		3.135	3.3	3.465	V
I_{EE}	Power Supply Current				150	mA

Table 5B. Power Supply DC Characteristics, V_{CC} = 2.5V ± 5%, V_{EE} = 0V, T_A = -40°C to 85°C

Symbol	Parameter	Test Conditions	Minimum	Typical	Maximum	Units
V_{CC}	Positive Supply Voltage		2.375	2.5	2.625	V
I_{EE}	Power Supply Current				145	mA

Table 5C. LVPECL DC Characteristics, V_{CC} = 3.3V ± 5% or V_{CC} = 2.5V ± 5%, V_{EE} = 0V, T_A = -40°C to 85°C

Symbol	Parameter	Test Conditions	Minimum	Typical	Maximum	Units
V_{OH}	Output High Voltage; NOTE 2		V_{CC} – 1.3		V_{CC} – 0.8	V
V_{OL}	Output Low Voltage; NOTE 2		V_{CC} – 2.0		V_{CC} – 1.5	V
V_{SWING}	Peak-to-Peak Output Voltage Swing		0.55		1.0	V

NOTE 1: Outputs terminated with 50Ω to V_{CC} – 2V.

© 2019 Renesas Electronics Corporation

Table 5D. LVCMOS/LVTTL DC Characteristic, V_{CC} = 3.3V ± 5% or 2.5V ± 5%, V_{EE} = 0V, T_A = -40°C to 85°C

Symbol	Parameter		Test Conditions	Minimum	Typical	Maximum	Units
V_{IH}	Input High Voltage	FSEL[1:0], OE	V_{CC} = 3.3V +5%	1.7		V_{CC} +0.3	V
		FSEL[1:0], OE	V_{CC} = 2.5V +5%	1.7		V_{CC} +0.3	V
V_{IL}	Input Low Voltage	FSEL[1:0]	V_{CC} = 3.3V +5%	-0.3		0.5	V
		OE	V_{CC} = 3.3V +5%	-0.3		0.8	V
		FSEL[1:0]	V_{CC} = 2.5V +5%	-0.3		0.5	V
		OE	V_{CC} = 2.5V +5%	-0.3		0.8	V
I_{IH}	Input High Current	OE	V_{CC} = V_{IN} = 3.465V or 2.625V			10	µA
		SDATA, SCLK	V_{CC} = V_{IN} = 3.465V or 2.625V			5	µA
		FSEL0, FSEL1	V_{CC} = V_{IN} = 3.465V or 2.625V			150	µA
I_{IL}	Input Low Current	OE	V_{CC} = 3.465V or 2.625V, V_{IN} = 0V	-500			µA
		SDATA, SCLK	V_{CC} = 3.465V or 2.625V, V_{IN} = 0V	-150			µA
		FSEL0, FSEL1	V_{CC} = 3.465V or 2.625V, V_{IN} = 0V	-5			µA

© 2019 Renesas Electronics Corporation

AC Electrical Characteristics

Table 6A. VCXO Control Voltage Input (V_C) Characterisitics, V_{CC} = 3.3V ± 5% or 2.5V ± 5%, V_{EE} = 0V, T_A = -40°C to 85°C

Symbol	Parameter	Test Conditions	Minimum	Typical	Maximum	Units
K_V	Oscillator Gain, NOTE 1, 2, 3 V_{CC} = 3.3V	ADC_GAIN[5:0] = 000001		7.57		ppm/V
		ADC_GAIN[5:0] = 000010		15.15		ppm/V
		ADC_GAIN[5:0] = XXXXXX		25 · ADC_GAIN ÷ V_{CC}		ppm/V
		ADC_GAIN[5:0] = 111110		469.69		ppm/V
		ADC_GAIN[5:0] = 111111		477.27		ppm/V
	Oscillator Gain, NOTE 1, 2, 3 V_{CC} = 2.5V	ADC_GAIN[5:0] = 000001		10		ppm/V
		ADC_GAIN[5:0] = 000010		20		ppm/V
		ADC_GAIN[5:0] = XXXXXX		25 · ADC_GAIN ÷ V_{CC}		ppm/V
		ADC_GAIN[5:0] = 111110		620		ppm/V
		ADC_GAIN[5:0] = 111111		630		ppm/V
L_{VC}	Control Voltage Linearity	BSL Variation; NOTE 4	-1	±0.1	+1	%
BW	Modulation Bandwidth			100		kHz
R_{VC}	VC Input Resistance		500			kΩ
VC_{NOM}	Nominal Control Voltage			V_{CC}÷2		V
V_C	Control Voltage Tuning Range; NOTE 4		0		V_{CC}	V

NOTE: Electrical parameters are guaranteed over the specified ambient operating temperature range, which is established when the device is mounted in a test socket with maintained transverse airflow greater than 500lfpm. The device will meet specifications after thermal equilibrium has been reached under these conditions.
NOTE 1: V_C = 10% to 90% of V_{CC}.
NOTE 2: Nominal oscillator gain: Pull range divided by the control voltage tuning range of 3.3V.
E.g. for ADC_GAIN[6:0] = 000001 the pull range is ±12.5ppm, resulting in an oscillator gain of 25ppm ÷ 3.3V = 7.57ppm/V.
NOTE3: For best phase noise performance, use the lowest K_V that meets the requirements of the application.
NOTE 4: BSL = Best Straight Line Fit: Variation of the output frequency vs. control voltage V_C, in percent. V_C ranges from 10% to 90% V_{CC}.

© 2019 Renesas Electronics Corporation

Table 6B. AC Characteristics, V_{CC} = 3.3V ± 5% or 2.5V ± 5%, V_{EE} = 0V, T_A = -40°C to 85°C

Symbol	Parameter	Test Conditions	Minimum	Typical	Maximum	Units
f_{OUT}	Output Frequency Q, nQ	Output Divider, *N* = 3 to126	15.476		866.67	MHz
		Output Divider, *N* = 2	975		1,300	MHz
f_I	Initial Accuracy	Measured at 25°C			±10	ppm
f_S	Temperature Stability	Option code = A or B			±100	ppm
		Option code = E or F			±50	ppm
		Option code = K or L			±20	ppm
f_A	Aging	Frequency drift over 10 year life			±3	ppm
		Frequency drift over 15 year life			±5	ppm
f_T	Total Stability	Option code A or B (10 year life)			±113	ppm
		Option code E or F (10 year life)			±63	ppm
		Option code K or L (10 year life)			±33	ppm
*t*jit(cc)	Cycle-to-Cycle Jitter; NOTE 1				20	ps
*t*jit(per)	RMS Period Jitter; NOTE 1			2.85	4	ps
*t*jit(Ø)	RMS Phase Jitter (Random) Fractional PLL feedback and f_{XTAL}=114.285MHz (0xxx order codes)	17 MHz ≤ f_{OUT} ≤ 1300MHz, NOTE 2,3,4		0.475	0.990	ps
		f_{OUT} = 156.25MHz, NOTE 2, 3, 4		0.487	0.757	ps
		f_{OUT} = 156.25MHz, NOTE 2, 3, 5		0.614		ps
Φ_N(100)	Single-side band phase noise, 100Hz from Carrier	156.25MHz		-72.0		dBc/Hz
Φ_N(1k)	Single-side band phase noise, 1kHz from Carrier	156.25MHz		-99.0		dBc/Hz
Φ_N(10k)	Single-side band phase noise, 10kHz from Carrier	156.25MHz		-125.7		dBc/Hz
Φ_N(100k)	Single-side band phase noise, 100kHz from Carrier	156.25MHz		-129.5		dBc/Hz
Φ_N(1M)	Single-side band phase noise, 1MHz from Carrier	156.25MHz		-140.5		dBc/Hz
Φ_N(10M)	Single-side band phase noise, 10MHz from Carrier	156.25MHz		-144.4		dBc/Hz
PSNR	Power Supply Noise Rejection	50 MV Sinusoidal Noise 1kHz - 50 kHz		-54		db
t_R / t_F	Output Rise/Fall Time	20% to 80%	100		425	ps
odc	Output Duty Cycle		45		55	%
t_{OSC}	Device startup time after power-up				20	ms
t_{SET}	Output frequency settling time after FSEL0 and FSEL1 values are changed			470		µs

NOTE: Electrical parameters are guaranteed over the specified ambient operating temperature range, which is established when the device is mounted in a test socket with maintained transverse airflow greater than 500 lfpm. The device will meet specifications after thermal equilibrium has been reached under these conditions. All AC parameters are characterized with P=1 and pull range = ±250 ppm.
NOTE: XTAL parameters (initial accuracy, temperature stability, aging and total stability) are guaranteed by manufacturing.
NOTE 1: This parameter is defined in accordance with JEDEC standard 65.
NOTE 2: Please refer to the phase noise plots.
NOTE 3: Please see the FemtoClockNG Ceramic 5x7 Modules Programming guide for more information on finding the optimum configuration for phase noise.
NOTE 4: Integration range: 12kHz-20MHz.
NOTE 5: Integration range: 1kHz-40MHz.

© 2019 Renesas Electronics Corporation

Typical Phase Noise at 156.25MHz (12kHz - 20MHz)

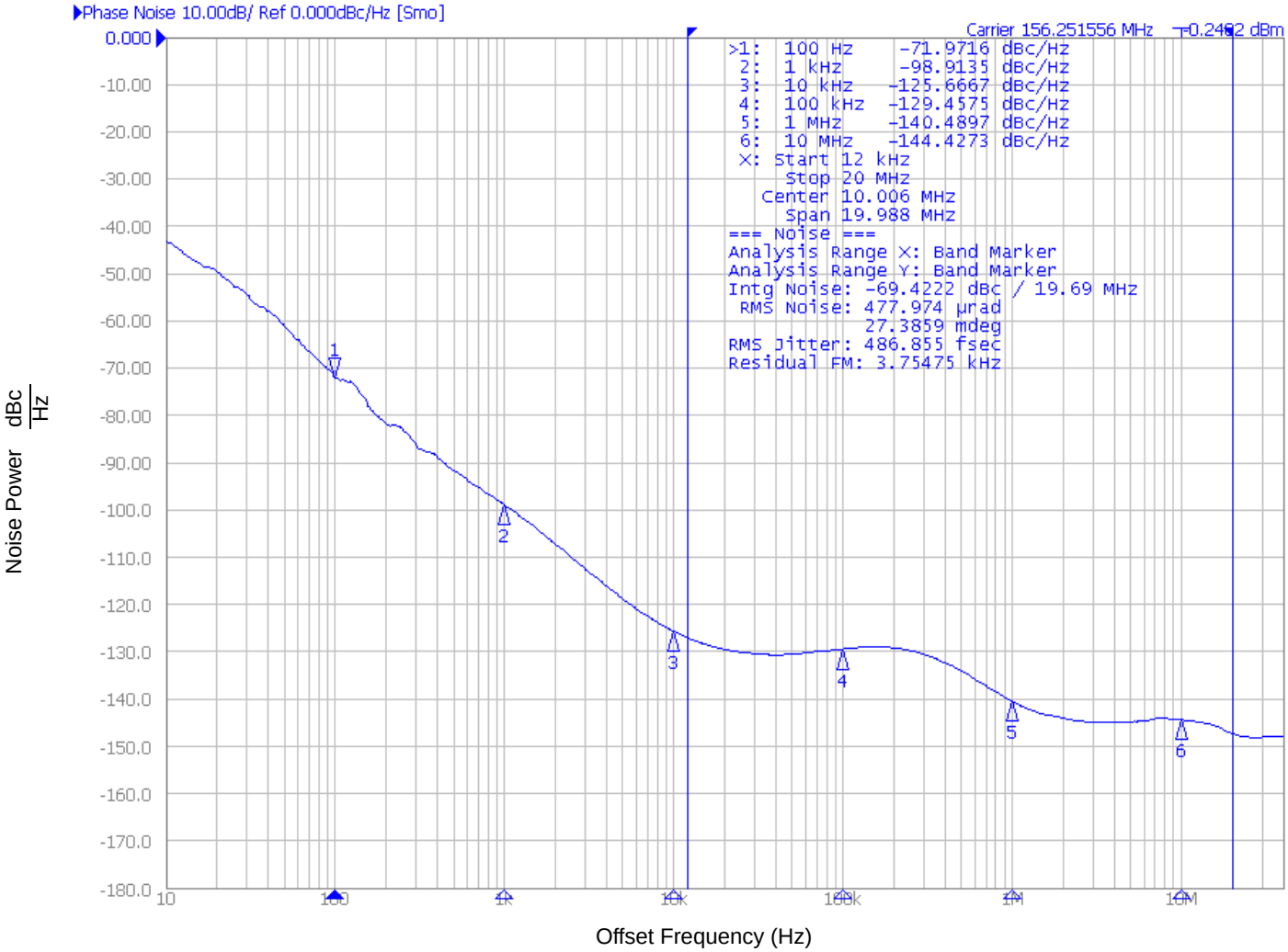

© 2019 Renesas Electronics Corporation

Parameter Measurement Information

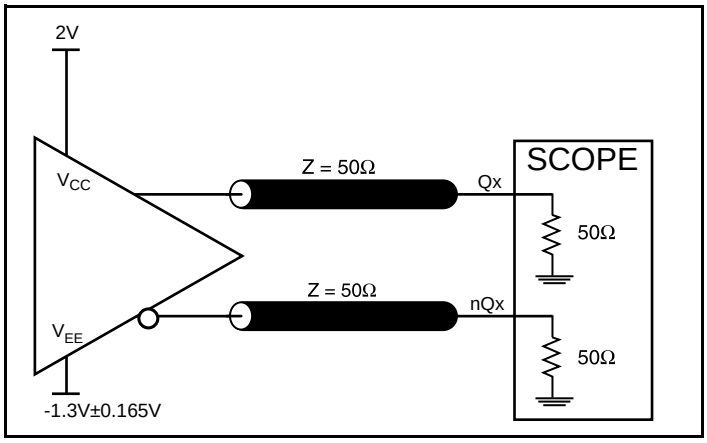

3.3V LVPECL Output Load AC Test Circuit

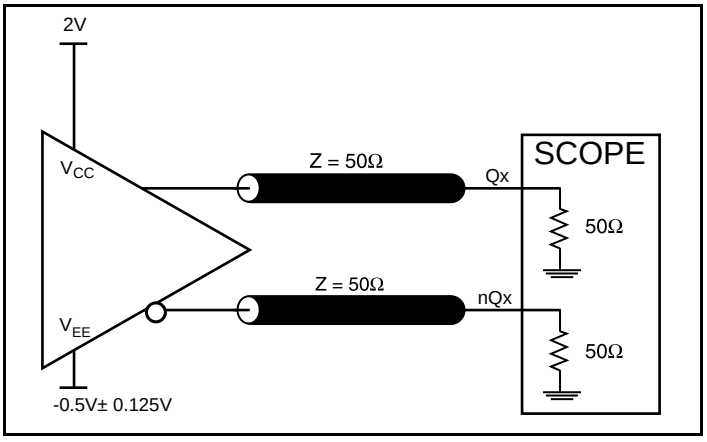

2.5V LVPECL Output Load AC Test Circuit

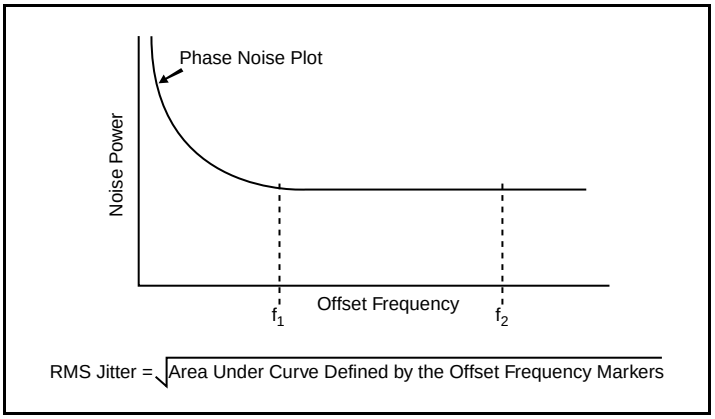

RMS Phase Jitter

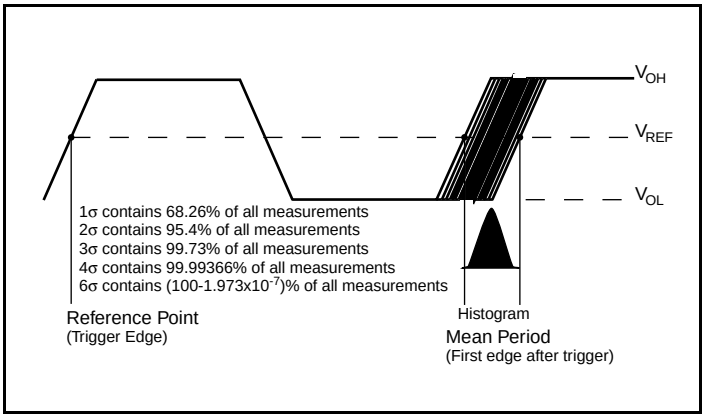

Period Jitter

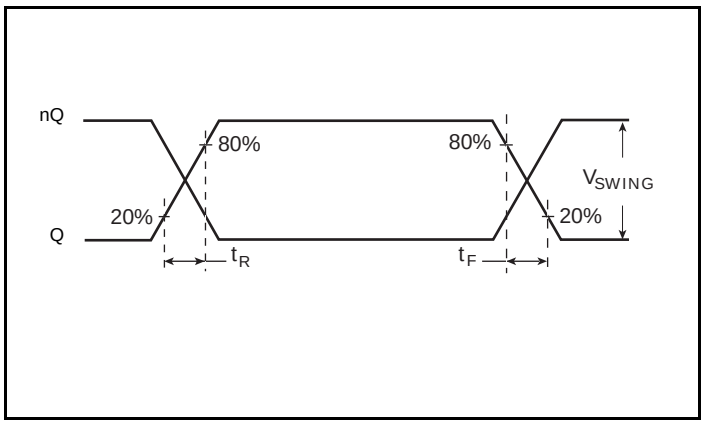

Output Rise/Fall Time

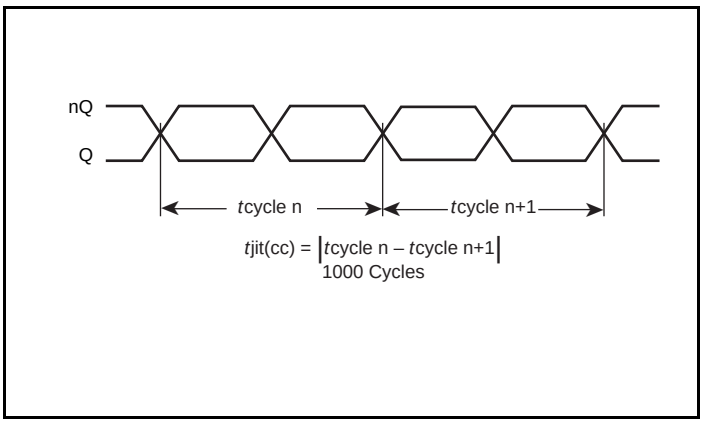

Cycle-to-Cycle Jitter

© 2019 Renesas Electronics Corporation

Parameter Measurement Information, continued

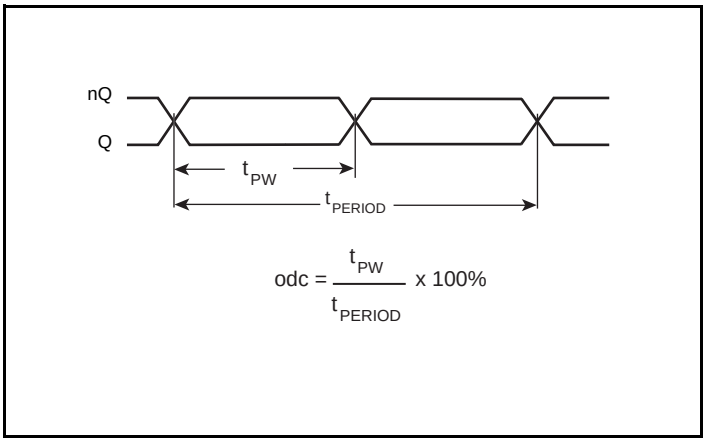

Output Duty Cycle/Pulse Width/Period

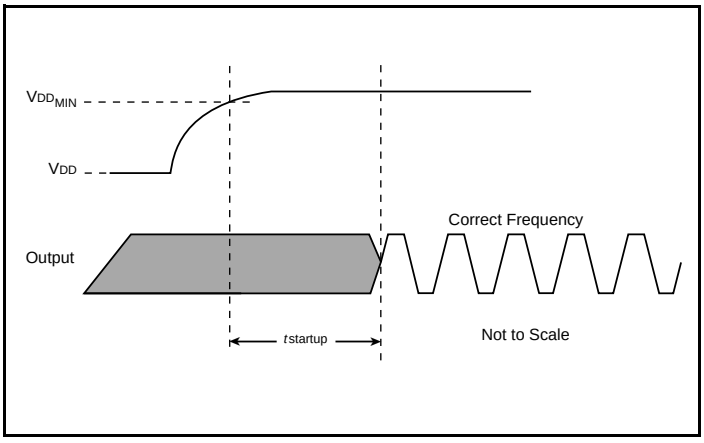

Start-Up Time

Applications Information

Recommendations for Unused Input Pins

Inputs:

LVCMOS Select Pins

The FSEL[1:0] have internal pulldowns and the OE control pin has an internal pullup; additional resistance is not required but can be added for additional protection. A 1kΩ resistor can be used. SCLK and SDATA should be left floating if not used.

© 2019 Renesas Electronics Corporation

Termination for 3.3V LVPECL Outputs

The clock layout topology shown below is a typical termination for LVPECL outputs. The two different layouts mentioned are recommended only as guidelines.

The differential outputs are low impedance follower outputs that generate ECL/LVPECL compatible outputs. Therefore, terminating resistors (DC current path to ground) or current sources must be used for functionality. These outputs are designed to drive 50Ω transmission lines. Matched impedance techniques should be used to maximize operating frequency and minimize signal distortion. *Figures 1A and 1B* show two different layouts which are recommended only as guidelines. Other suitable clock layouts may exist and it would be recommended that the board designers simulate to guarantee compatibility across all printed circuit and clock component process variations.

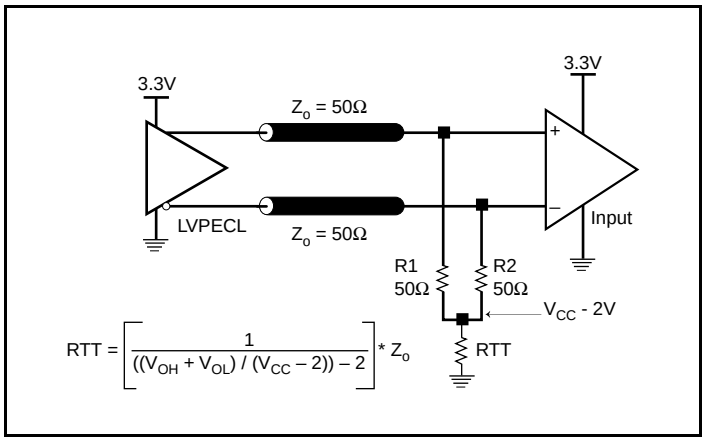

Figure 1A. 3.3V LVPECL Output Termination

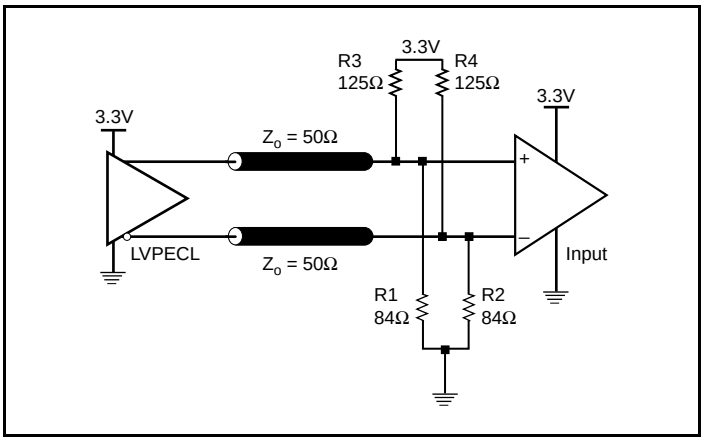

Figure 1B. 3.3V LVPECL Output Termination

© 2019 Renesas Electronics Corporation

Termination for 2.5V LVPECL Outputs

Figure 2A and *Figure 2B* show examples of termination for 2.5V LVPECL driver. These terminations are equivalent to terminating 50Ω to V_{CC} – 2V. For V_{CC} = 2.5V, the V_{CC} – 2V is very close to ground level. The R3 in Figure 2B can be eliminated and the termination is shown in *Figure 2C.*

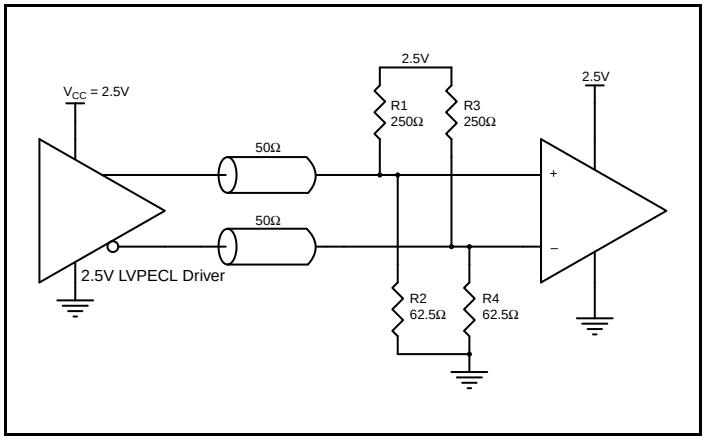

Figure 2A. 2.5V LVPECL Driver Termination Example

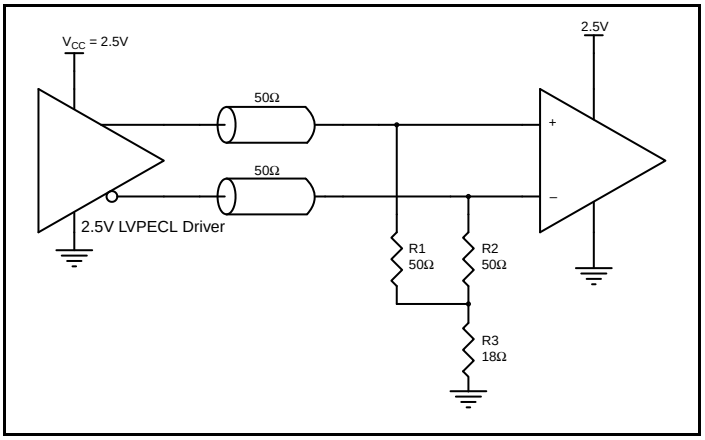

Figure 2B. 2.5V LVPECL Driver Termination Example

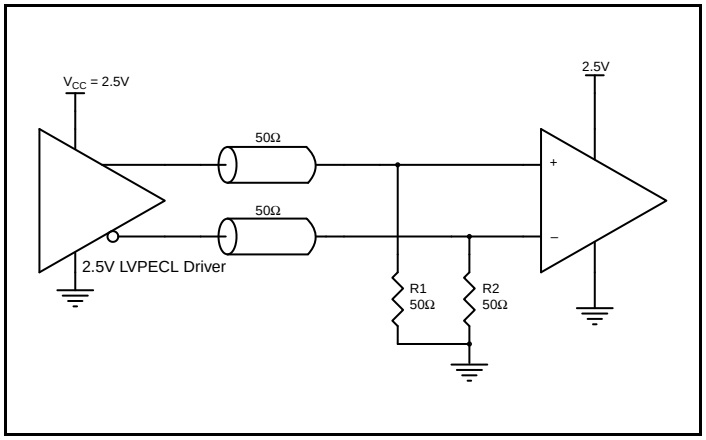

Figure 2C. 2.5V LVPECL Driver Termination Example

© 2019 Renesas Electronics Corporation

Schematic Layout

Figure 3 shows an example of IDT8N3QV01 application schematic. In this example, the device is operated at V_{CC} = 3.3V. As with any high speed analog circuitry, the power supply pins are vulnerable to noise. To achieve optimum jitter performance, power supply isolation is required. The IDT8N3QV01 provides separate power supplies to isolate from coupling into the internal PLL.

In order to achieve the best possible filtering, it is recommended that the placement of the filter components be on the device side of the PCB as close to the power pins as possible. If space is limited, the 0.1uF capacitor in each power pin filter should be placed on the device side of the PCB and the other components can be placed on the opposite side.

Power supply filter recommendations are a general guideline to be used for reducing external noise from coupling into the devices. The filter performance is designed for wide range of noise frequencies. This low-pass filter starts to attenuate noise at approximately 10kHz. If a specific frequency noise component is known, such as switching power supply frequencies, it is recommended that component values be adjusted and if required, additional filtering be added. Additionally, good general design practices for power plane voltage stability suggests adding bulk capacitances in the local area of all devices.

The schematic example focuses on functional connections and is not configuration specific. Refer to the pin description and functional tables in the datasheet to ensure the logic control inputs are properly set.

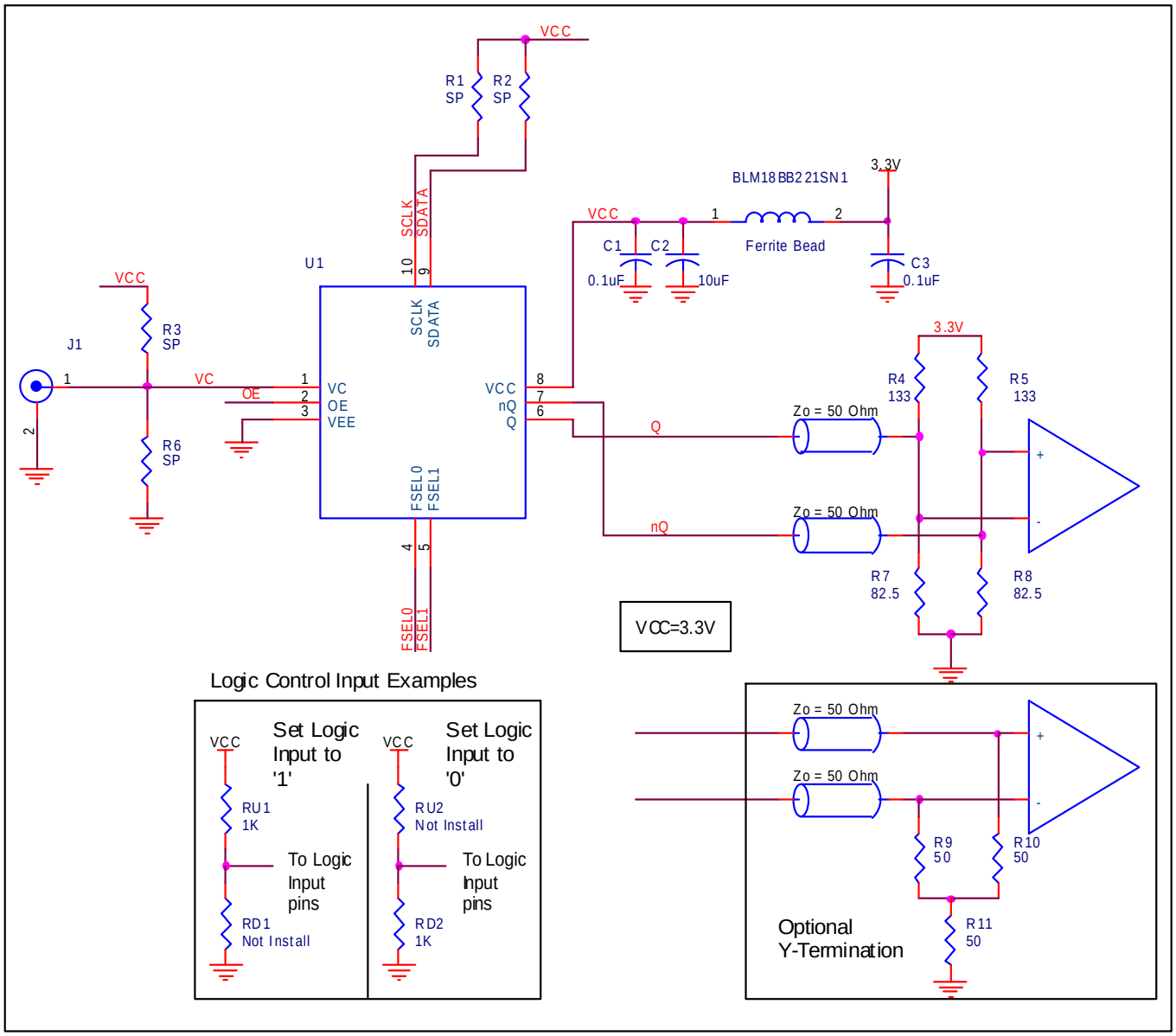

Figure 3. IDT8N3QV01 Application Schematic

© 2019 Renesas Electronics Corporation

Power Considerations

This section provides information on power dissipation and junction temperature for the ICS8N3QV01.
Equations and example calculations are also provided.

1. Power Dissipation.

The total power dissipation for the ICS8N3QV01 is the sum of the core power plus the power dissipation in the load(s).
The following is the power dissipation for V_{CC} = 3.3V + 5% = 3.465V, which gives worst case results.

NOTE: Please refer to Section 3 for details on calculating power dissipation in the load.

- Power $(core)_{MAX}$ = V_{CC_MAX} * I_{EE_MAX} = 3.465V * 150mA = **519.75mW**
- Power $(outputs)_{MAX}$ = **34.2mW/Loaded Output pair**

Total Power$_{_MAX}$ (3.465V, with all outputs switching) = 519.75mW + 34.2mW = **533.95mW**

2. Junction Temperature.

Junction temperature, Tj, is the temperature at the junction of the bond wire and bond pad, and directly affects the reliability of the device. The maximum recommended junction temperature is 125°C. Limiting the internal transistor junction temperature, Tj, to 125°C ensures that the bond wire and bond pad temperature remains below 125°C.

The equation for Tj is as follows: Tj = θ_{JA} * Pd_total + T_A

Tj = Junction Temperature

θ_{JA} = Junction-to-Ambient Thermal Resistance

Pd_total = Total Device Power Dissipation (example calculation is in section 1 above)

T_A = Ambient Temperature

In order to calculate junction temperature, the appropriate junction-to-ambient thermal resistance θ_{JA} must be used. Assuming no air flow and a multi-layer board, the appropriate value is 49.4°C/W per Table 7 below.

Therefore, Tj for an ambient temperature of 85°C with all outputs switching is:

85°C + 0.554W * 49.4°C/W = 112.4°C. This is below the limit of 125°C.

This calculation is only an example. Tj will obviously vary depending on the number of loaded outputs, supply voltage, air flow and the type of board (multi-layer).

Table 7. Thermal Resistance θ_{JA} for 10 Lead Ceramic 5mm x 7mm Package, Forced Convection

θ_{JA} **by Velocity**			
Meters per Second	**0**	**1**	**2.5**
Multi-Layer PCB, JEDEC Standard Test Boards	49.4°C/W	44.2C/W	41°C/W

© 2019 Renesas Electronics Corporation

3. Calculations and Equations.

The purpose of this section is to calculate the power dissipation for the LVPECL output pair.

LVPECL output driver circuit and termination are shown in *Figure 4.*

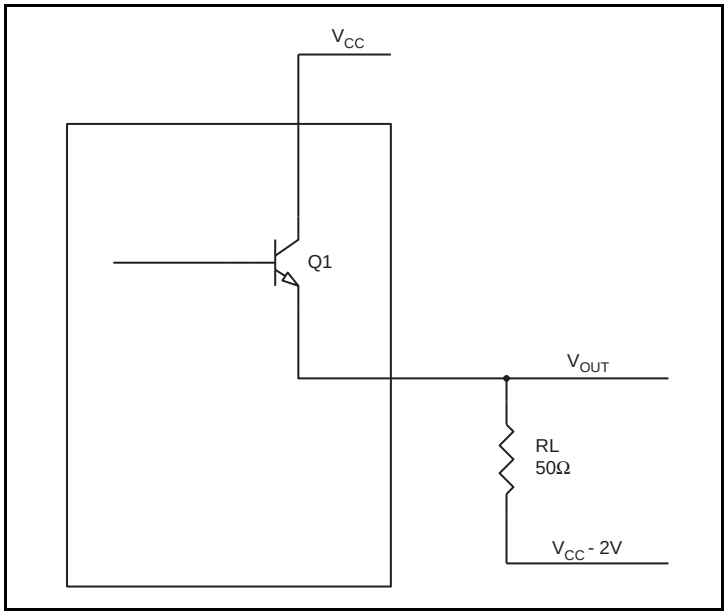

Figure 4. LVPECL Driver Circuit and Termination

To calculate worst case power dissipation into the load, use the following equations which assume a 50Ω load, and a termination voltage of V_{CC} – 2V.

- For logic high, $V_{OUT} = V_{OH_MAX} = \mathbf{V_{CC_MAX} - 0.8V}$
  $(V_{CC_MAX} - V_{OH_MAX}) = \mathbf{0.8V}$
- For logic low, $V_{OUT} = V_{OL_MAX} = \mathbf{V_{CC_MAX} - 1.5V}$
  $(V_{CC_MAX} - V_{OL_MAX}) = \mathbf{1.5V}$

Pd_H is power dissipation when the output drives high.

Pd_L is the power dissipation when the output drives low.

$Pd_H = [(V_{OH_MAX} - (V_{CC_MAX} - 2V))/R_L] * (V_{CC_MAX} - V_{OH_MAX}) = [(2V - (V_{CC_MAX} - V_{OH_MAX}))/R_L] * (V_{CC_MAX} - V_{OH_MAX}) =$
$[(2V - 0.8V)/50\Omega] * 0.8V =$ **19.2mW**

$Pd_L = [(V_{OL_MAX} - (V_{CC_MAX} - 2V))/R_L] * (V_{CC_MAX} - V_{OL_MAX}) = [(2V - (V_{CC_MAX} - V_{OL_MAX}))/R_L] * (V_{CC_MAX} - V_{OL_MAX}) =$
$[(2V - 1.5V)/50\Omega] * 1.5V =$ **15mW**

Total Power Dissipation per output pair = Pd_H + Pd_L = **34.2mW**

© 2019 Renesas Electronics Corporation

Reliability Information

Table 8. θ_{JA} vs. Air Flow Table for a 10-lead Ceramic 5mm x 7mm Package

θ_{JA} vs. Air Flow			
Meters per Second	**0**	**1**	**2.5**
Multi-Layer PCB, JEDEC Standard Test Boards	49.4°C/W	44.2C/W	41°C/W

Transistor Count

The transistor count for IDT8N3QV01 Rev G is: 43, 718

© 2019 Renesas Electronics Corporation

Package Outline and Package Dimensions

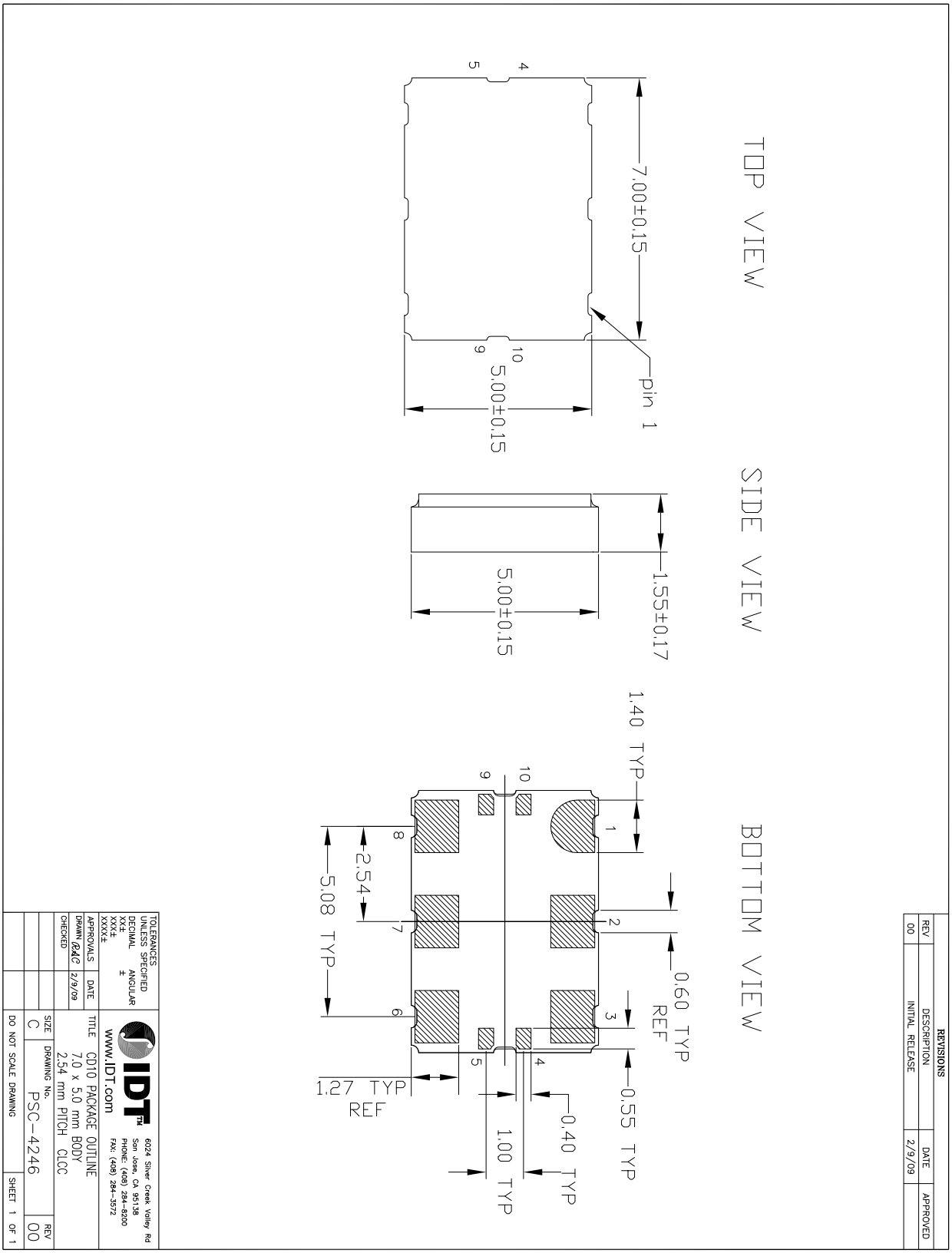

© 2019 Renesas Electronics Corporation

Ordering Information for FemtoClock NG Ceramic-Package XO and VCXO Products

The programmable VCXO and XO devices support a variety of devices options such as the output type, number of default frequencies, internal crystal frequency, power supply voltage, ambient temperature range and the frequency accuracy. The device options, default frequencies and default VCXO pull range must be specified at the time of order and are programmed by IDT before the shipment. The table below specifies the available order codes, including the device options and default frequency configurations. Example part number: the order code 8N3QV01FG-0001CDI specifies a programmable, quad default-frequency VCXO with a voltage supply of 2.5V, a LVPECL output, a ±50 ppm crystal frequency accuracy, contains a 114.285MHz internal crystal as frequency source, industrial temperature range, a lead-free (6/6 RoHS) 10-lead Ceramic 5mm x 7mm x 1.55mm package and is factory-programmed to the default frequencies of 100, 122.88, 125 and 156.25MHz and to the VCXO pull range of min. ±100 ppm.

Other default frequencies and order codes are available from IDT on request. For more information on available default frequencies, see the *FemtoClock NG Ceramic-Package XO and VCXO Ordering Product Information* document.

Part/Order Numbers

8N X X XXX X X - dddd XX X X

FemtoClock NG

I/O Identifier
0: LVCMOS
3: LVPECL
4: LVDS

Number of Default Frequencies
S: 1: Single
D: 2: Dual
Q: 4: Quad

Part Number

	Function	#pins	OE fct. at pin
001	XO	10	OE@2
003	XO	10	OE@1
V01	VCXO	10	OE@2
V03	VCXO	10	OE@1
V75	VCXO	6	OE@2
V76	VCXO	6	nOE@2
V85	VCXO	6	—
085	XO	6	OE@1
270	XO	6	OE@1
271	XO	6	OE@2
272	XO	6	nOE@2
273	XO	6	nOE@1

Shipping Package
8: Tape & Reel
(no letter): Tray

Ambient Temperature Range
"**I**": Industrial: (T_A = -40°C to 85°C)
(no letter) : (T_A = 0°C to 70°C)

Package Code
CD: Lead-Free, 6/10-lead ceramic 5mm x 7mm x 1.55mm

Default-Frequency and VCXO Pull Range
See document *FemtoClock NG Ceramic-Package XO and VCXO Ordering Product Information.*

dddd	f_{XTAL} (MHz)	PLL feedback	Use for
0000 to **0999**	114.285	Fractional	VCXO, XO
1000 to **1999**	100.000	Integer	XO
2000 to **2999**		Fractional	XO

Last digit = **L**: configuration pre-programmed and not changable

Die Revision
G

Option Code (Supply Voltage and Frequency-Stability)
A: V_{CC} = 3.3V±5%, ±100ppm
B: V_{CC} = 2.5V±5%, ±100ppm
E: V_{CC} = 3.3V±5%, ±50ppm
F: V_{CC} = 2.5V±5%, ±50ppm
K: V_{CC} = 3.3V±5%, ±20ppm
L: V_{CC} = 2.5V±5%, ±20ppm

© 2019 Renesas Electronics Corporation

Table 9. Device Marking

Marking	Industrial Temperature Range (T_A = -40°C to 85°C)	Commercial Temperature Range (T_A = 0°C to 70°C)
	IDT8N3**x**V01**y**G- **dddd**CDI	IDT8N3**x**V01**y**G- **dddd**CD
	x = Number of Default Frequencies, **y** = Option Code, **dddd**=Default-Frequency and VCXO Pull Range	

© 2019 Renesas Electronics Corporation

Revision History Sheet

Rev	Table	Page	Description of Change	Date
A	9	21	Table 9 Device Marking, corrected marking.	3/6/12

© 2019 Renesas Electronics Corporation

Notice

1. Descriptions of circuits, software and other related information in this document are provided only to illustrate the operation of semiconductor products and application examples. You are fully responsible for the incorporation or any other use of the circuits, software, and information in the design of your product or system. Renesas Electronics disclaims any and all liability for any losses and damages incurred by you or third parties arising from the use of these circuits, software, or information.
2. Renesas Electronics hereby expressly disclaims any warranties against and liability for infringement or any other claims involving patents, copyrights, or other intellectual property rights of third parties, by or arising from the use of Renesas Electronics products or technical information described in this document, including but not limited to, the product data, drawings, charts, programs, algorithms, and application examples.
3. No license, express, implied or otherwise, is granted hereby under any patents, copyrights or other intellectual property rights of Renesas Electronics or others.
4. You shall not alter, modify, copy, or reverse engineer any Renesas Electronics product, whether in whole or in part. Renesas Electronics disclaims any and all liability for any losses or damages incurred by you or third parties arising from such alteration, modification, copying or reverse engineering.
5. Renesas Electronics products are classified according to the following two quality grades: "Standard" and "High Quality". The intended applications for each Renesas Electronics product depends on the product's quality grade, as indicated below.
   "Standard": Computers; office equipment; communications equipment; test and measurement equipment; audio and visual equipment; home electronic appliances; machine tools; personal electronic equipment; industrial robots; etc.
   "High Quality": Transportation equipment (automobiles, trains, ships, etc.); traffic control (traffic lights); large-scale communication equipment; key financial terminal systems; safety control equipment; etc.
   Unless expressly designated as a high reliability product or a product for harsh environments in a Renesas Electronics data sheet or other Renesas Electronics document, Renesas Electronics products are not intended or authorized for use in products or systems that may pose a direct threat to human life or bodily injury (artificial life support devices or systems; surgical implantations; etc.), or may cause serious property damage (space system; undersea repeaters; nuclear power control systems; aircraft control systems; key plant systems; military equipment; etc.). Renesas Electronics disclaims any and all liability for any damages or losses incurred by you or any third parties arising from the use of any Renesas Electronics product that is inconsistent with any Renesas Electronics data sheet, user's manual or other Renesas Electronics document.
6. When using Renesas Electronics products, refer to the latest product information (data sheets, user's manuals, application notes, "General Notes for Handling and Using Semiconductor Devices" in the reliability handbook, etc.), and ensure that usage conditions are within the ranges specified by Renesas Electronics with respect to maximum ratings, operating power supply voltage range, heat dissipation characteristics, installation, etc. Renesas Electronics disclaims any and all liability for any malfunctions, failure or accident arising out of the use of Renesas Electronics products outside of such specified ranges.
7. Although Renesas Electronics endeavors to improve the quality and reliability of Renesas Electronics products, semiconductor products have specific characteristics, such as the occurrence of failure at a certain rate and malfunctions under certain use conditions. Unless designated as a high reliability product or a product for harsh environments in a Renesas Electronics data sheet or other Renesas Electronics document, Renesas Electronics products are not subject to radiation resistance design. You are responsible for implementing safety measures to guard against the possibility of bodily injury, injury or damage caused by fire, and/or danger to the public in the event of a failure or malfunction of Renesas Electronics products, such as safety design for hardware and software, including but not limited to redundancy, fire control and malfunction prevention, appropriate treatment for aging degradation or any other appropriate measures. Because the evaluation of microcomputer software alone is very difficult and impractical, you are responsible for evaluating the safety of the final products or systems manufactured by you.
8. Please contact a Renesas Electronics sales office for details as to environmental matters such as the environmental compatibility of each Renesas Electronics product. You are responsible for carefully and sufficiently investigating applicable laws and regulations that regulate the inclusion or use of controlled substances, including without limitation, the EU RoHS Directive, and using Renesas Electronics products in compliance with all these applicable laws and regulations. Renesas Electronics disclaims any and all liability for damages or losses occurring as a result of your noncompliance with applicable laws and regulations.
9. Renesas Electronics products and technologies shall not be used for or incorporated into any products or systems whose manufacture, use, or sale is prohibited under any applicable domestic or foreign laws or regulations. You shall comply with any applicable export control laws and regulations promulgated and administered by the governments of any countries asserting jurisdiction over the parties or transactions.
10. It is the responsibility of the buyer or distributor of Renesas Electronics products, or any other party who distributes, disposes of, or otherwise sells or transfers the product to a third party, to notify such third party in advance of the contents and conditions set forth in this document.
11. This document shall not be reprinted, reproduced or duplicated in any form, in whole or in part, without prior written consent of Renesas Electronics.
12. Please contact a Renesas Electronics sales office if you have any questions regarding the information contained in this document or Renesas Electronics products.

(Note1) "Renesas Electronics" as used in this document means Renesas Electronics Corporation and also includes its directly or indirectly controlled subsidiaries.
(Note2) "Renesas Electronics product(s)" means any product developed or manufactured by or for Renesas Electronics.

(Rev.4.0-1 November 2017)

Corporate Headquarters

TOYOSU FORESIA, 3-2-24 Toyosu,
Koto-ku, Tokyo 135-0061, Japan
www.renesas.com

Contact Information

For further information on a product, technology, the most up-to-date version of a document, or your nearest sales office, please visit:
www.renesas.com/contact/

Trademarks

Renesas and the Renesas logo are trademarks of Renesas Electronics Corporation. All trademarks and registered trademarks are the property of their respective owners.

© 2020 Renesas Electronics Corporation. All rights reserved.