## General Description

The IDT8N4Q001 is a Quad-Frequency Programmable Clock Oscillator with very flexible frequency programming capabilities. The device uses IDT's fourth generation FemtoClock® NG technology for an optimum high clock frequency and low phase noise performance. The device accepts 2.5V or 3.3V supply and is packaged in a small, lead-free (RoHS 6) 10-lead ceramic 5mm x 7mm x 1.55mm package.

Besides the four default power-up frequencies set by the FSEL0 and FSEL1 pins, the IDT8N4Q001 can be programmed via the I²C interface to output clock frequencies between 15.476MHz to 866.67MHz and from 975MHz to 1,300MHz to a very high degree of precision with a frequency step size of 435.9Hz ÷ *N* (*N* is the PLL output divider). Since the FSEL0 and FSEL1 pins are mapped to four independent PLL divider registers (P, MINT, MFRAC and N), reprogramming those registers to other frequencies under control of FSEL0 and FSEL1 is supported. The extended temperature range supports wireless infrastructure, telecommunication and networking end equipment requirements.

## Features

- Fourth generation FemtoClock® NG technology
- Programmable clock output frequency from 15.476MHz to 866.67MHz and from 975MHz to 1,300MHz
- Four power-up default frequencies (see part number order codes), re-programmable by I²C
- I²C programming interface for the output clock frequency and internal PLL control registers
- Frequency programming resolution is 435.9Hz ÷*N*
- One 2.5V, 3.3V LVDS clock output
- Two control inputs for the power-up default frequency
- LVCMOS/LVTTL compatible control inputs
- RMS phase jitter @ 156.25MHz (12kHz - 20MHz): 0.253ps (typical), integer PLL feedback configuration
- RMS phase jitter @ 156.25MHz (1kHz - 40MHz): 0.263ps (typical), integer PLL feedback configuration
- Full 2.5V or 3.3V supply modes
- -40°C to 85°C ambient operating temperature
- Available in Lead-free (RoHS 6) package

## Block Diagram

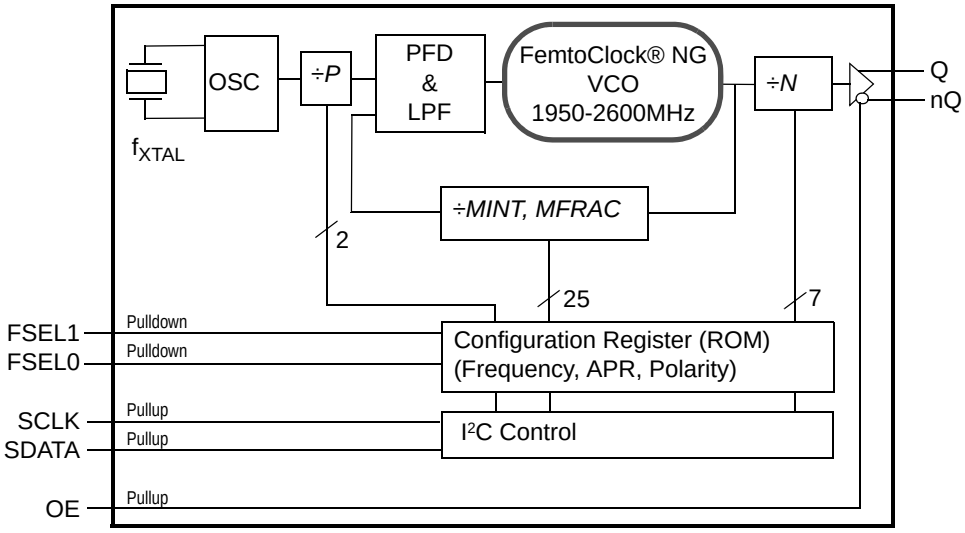


## Pin Assignment

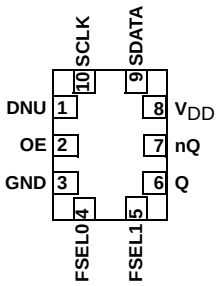


**IDT8N4Q001**
**10-lead ceramic 5mm x 7mm x 1.55mm package body**
**CD Package**
**Top View**


© 2019 Renesas Electronics Corporation

**Table 1. Pin Descriptions**

| Number | Name | Type | | Description |
|---|---|---|---|---|
| 1 | DNU | | | Do not use. |
| 2 | OE | Input | Pullup | Output enable pin. See Table 3A for function. LVCMOS/LVTTL interface levels. |
| 3 | GND | Power | | Power supply ground. |
| 5, 4 | FSEL1, FSEL0 | Input | Pulldown | Default frequency select pins. See the Default Frequency Order Codes section. LVCMOS/LVTTL interface levels. |
| 6, 7 | Q, nQ | Output | | Differential clock output. LVDS interface levels. |
| 8 | $V_{DD}$ | Power | | Power supply pin. |
| 9 | SDATA | Input | Pullup | $I^2C$ Data Input. LVCMOS/LVTTL interface levels. |
| 10 | SCLK | Input | Pullup | $I^2C$ Clock Input. LVCMOS/LVTTL interface levels. |

NOTE: *Pullup and Pulldown* refer to internal input resistors. See Table 2, *Pin Characteristics,* for typical values.

**Table 2. Pin Characteristics**

| Symbol | Parameter | Test Conditions | Minimum | Typical | Maximum | Units |
|---|---|---|---|---|---|---|
| $C_{IN}$ | Input Capacitance | | | 5.5 | | pF |
| $R_{PULLUP}$ | Input Pullup Resistor | | | 50 | | kΩ |
| $R_{PULLDOWN}$ | Input Pulldown Resistor | | | 50 | | kΩ |

# Function Tables

**Table 3A. OE Configuration**

| Input | |
|---|---|
| **OE** | **Output Enable** |
| 0 | Outputs Q, nQ are in high-impedance state. |
| 1 (default) | Outputs are enabled. |

NOTE: OE is an asynchronous control.

**Table 3B. Output Frequency Range**

| Output Frequency Ranges |
|---|
| 15.476MHz to 866.67MHz |
| 975MHz to 1,300MHz |

NOTE: Supported output frequency range. The output frequency can be programmed to any frequency in this range and to a precision of 218Hz or better.


© 2019 Renesas Electronics Corporation

## Block Diagram with Programming Registers

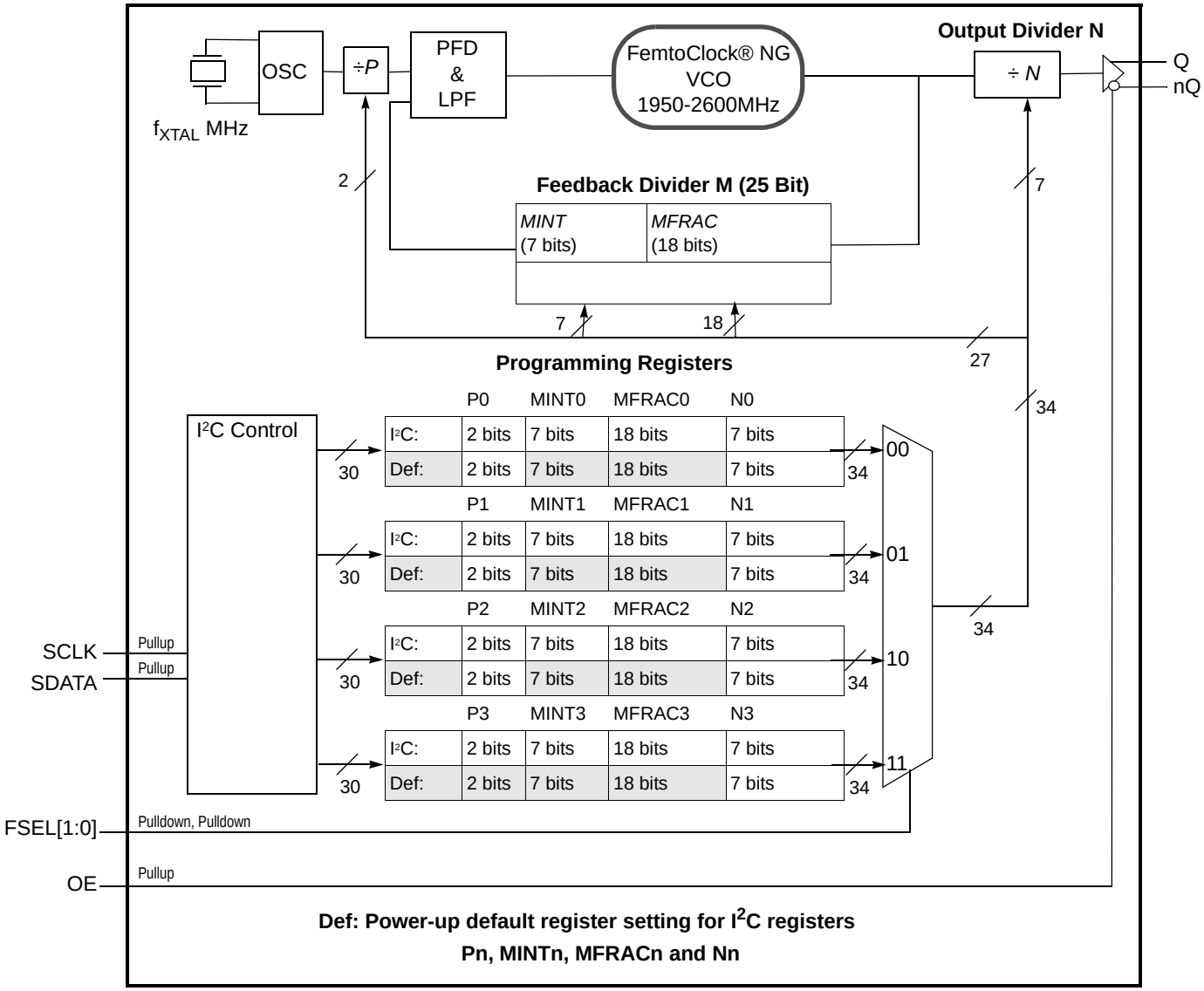



© 2019 Renesas Electronics Corporation

## Principles of Operation

The block diagram consists of the internal 3rd overtone crystal and oscillator which provide the reference clock $f_{XTAL}$ of either 114.285 MHz or 100MHz. The PLL includes the FemtoClock NG VCO along with the Pre-divider (*P*), the feedback divider (*M*) and the post divider (*N*). The *P*, *M*, and *N* dividers determine the output frequency based on the $f_{XTAL}$ reference and must be configured correctly for proper operation. The feedback divider is fractional supporting a huge number of output frequencies. The configuration of the feedback divider to integer-only values results in an improved output phase noise characteristics at the expense of the range of output frequencies. In addition, internal registers are used to hold up to four different factory pre-set *P*, *M*, and *N* configuration settings. These default pre-sets are stored in the $I^2C$ registers at power-up. Each configuration is selected via the the FSEL[1:0] pins and can be read back using the SCLK and SDATA pins.

The user may choose to operate the device at an output frequency different than that set by the factory. After power-up, the user may write new P, N and M settings into one or more of the four configuration registers and then use the FSEL[1:0] pins to select the newly programmed configuration. Note that the $I^2C$ registers are volatile and a power supply cycle will reload the pre-set factory default conditions.

If the user does choose to write a different *P*, *M*, and *N* configuration, it is recommended to write to a configuration which is not currently selected by FSEL[1:0] and then change to that configuration after the $I^2C$ transaction has completed. Changing the FSEL[1:0] controls results in an immediate change of the output frequency to the selected register values. The *P*, *M*, and *N* frequency configurations support an output frequency range 15.476MHz to 866.67MHz and 975MHz to 1,300MHz.

The devices use the fractional feedback divider with a delta-sigma modulator for noise shaping and robust frequency synthesis capability. The relatively high reference frequency minimizes phase noise generated by frequency multiplication and allows more efficient shaping of noise by the delta-sigma modulator.

The output frequency is determined by the 2-bit pre-divider (*P*), the feedback divider (M) and the 7-bit post divider (*N*). The feedback divider (*M*) consists of both a 7-bit integer portion (*MINT*) and an 18-bit fractional portion (*MFRAC*) and provides the means for high-resolution frequency generation. The output frequency $f_{OUT}$ is calculated by:

$$f_{OUT} = f_{XTAL} \cdot \frac{1}{P \cdot N} \cdot \left[ MINT + \frac{MFRAC + 0.5}{2^{18}} \right] \quad (1)$$

The four configuration registers for the *P, M (MINT & MFRAC)* and *N* dividers which are named Pn, MINTn, MFRACn and Nn with n = 0 to 3. “n” denominates one of the four possible configurations.

As identified previously, the configurations of *P, M (MINT & MFRAC)* and *N* divider settings are stored the $I^2C$ register, and the configuration loaded at power-up is determined by the FSEL[1:0] pins.

**Table 4. Frequency Selection**

| Input | | Selects | Register |
|---|---|---|---|
| FSEL1 | FSEL0 | | |
| 0 (def.) | 0 (def.) | Frequency 0 | P0, MINT0, MFRAC0, N0 |
| 0 | 1 | Frequency 1 | P1, MINT1, MFRAC1, N1 |
| 1 | 0 | Frequency 2 | P2, MINT2, MFRAC2, N2 |
| 1 | 1 | Frequency 3 | P3, MINT3, MFRAC3, N3 |

## Frequency Configuration

An order code is assigned to each frequency configuration programmed by the factory (default frequencies). For more information on the available default frequencies and order codes, please see the Ordering Information Section in this document. For available order codes, see the *FemtoClock NG Ceramic-Package XO and VCXO Ordering Product Information* document.

For more information and guidelines on programming of the device for custom frequency configurations, the register description, the selection of fractional and integer-feedback configurations and the serial interface description, see the *FemtoClock NG Ceramic 5x7 Module Programming Guide.*


© 2019 Renesas Electronics Corporation

## Absolute Maximum Ratings

NOTE: Stresses beyond those listed under *Absolute Maximum Ratings* may cause permanent damage to the device. These ratings are stress specifications only. Functional operation of product at these conditions or any conditions beyond those listed in the *DC Characteristics or AC Characteristics* is not implied. Exposure to absolute maximum rating conditions for extended periods may affect product reliability.

| Item | Rating |
|---|---|
| Supply Voltage, $V_{DD}$ | 3.63V |
| Inputs, $V_I$ | -0.5V to $V_{DD}$ + 0.5V |
| Outputs, $I_O$ (SDATA)<br>Outputs, $I_O$ (LVDS)<br>Continuous Current<br>Surge Current | 10mA<br><br>10mA<br>15mA |
| Package Thermal Impedance, $\theta_{JA}$ | 49.4°C/W (0 mps) |
| Storage Temperature, $T_{STG}$ | -65°C to 150°C |

## DC Electrical Characteristics

**Table 5A. Power Supply DC Characteristics, $V_{DD}$ = 3.3V ± 5%, $T_A$ = -40°C to 85°C**

| Symbol | Parameter | Test Conditions | Minimum | Typical | Maximum | Units |
|---|---|---|---|---|---|---|
| $V_{DD}$ | Power Supply Voltage | | 3.135 | 3.3 | 3.465 | V |
| $I_{DD}$ | Power Supply Current | | | | 160 | mA |

**Table 5B. Power Supply DC Characteristics, $V_{DD}$ = 2.5V ± 5%, $T_A$ = -40°C to 85°C**

| Symbol | Parameter | Test Conditions | Minimum | Typical | Maximum | Units |
|---|---|---|---|---|---|---|
| $V_{DD}$ | Power Supply Voltage | | 2.375 | 2.5 | 2.625 | V |
| $I_{DD}$ | Power Supply Current | | | | 155 | mA |


© 2019 Renesas Electronics Corporation

**Table 5C. LVCMOS/LVTTL DC Characteristic, $V_{DD}$ = 3.3V ± 5% or 2.5V ± 5%, $T_A$ = -40°C to 85°C**

| Symbol | Parameter | | Test Conditions | Minimum | Typical | Maximum | Units |
|---|---|---|---|---|---|---|---|
| $V_{IH}$ | Input High Voltage | FSEL[1:0], OE | $V_{CC}$ =3.3V +5% | 1.7 | | $V_{CC}$ +0.3 | V |
| | | FSEL[1:0], OE | $V_{CC}$ =2.5V +5% | 1.7 | | $V_{CC}$ +0.3 | V |
| $V_{IL}$ | Input Low Voltage | FSEL[1:0] | $V_{CC}$ =3.3V +5% | -0.3 | | 0.5 | V |
| | | OE | $V_{CC}$ =3.3V +5% | -0.3 | | 0.8 | V |
| | | FSEL[1:0] | $V_{CC}$ =2.5V +5% | -0.3 | | 0.5 | V |
| | | OE | $V_{CC}$ =2.5V +5% | -0.3 | | 0.8 | V |
| $I_{IH}$ | Input High Current | OE | $V_{DD}$ = $V_{IN}$ = 3.465V or 2.625V | | | 10 | µA |
| | | SDATA, SCLK | $V_{DD}$ = $V_{IN}$ = 3.465V or 2.625V | | | 5 | µA |
| | | FSEL0, FSEL1 | $V_{DD}$ = $V_{IN}$ = 3.465V or 2.625V | | | 150 | µA |
| $I_{IL}$ | Input Low Current | OE | $V_{DD}$ = 3.465V or 2.625V, $V_{IN}$ = 0V | -500 | | | µA |
| | | SDATA, SCLK | $V_{DD}$ = 3.465V or 2.625V, $V_{IN}$ = 0V | -150 | | | µA |
| | | FSEL0, FSEL1 | $V_{DD}$ = 3.465V or 2.625V, $V_{IN}$ = 0V | -5 | | | µA |

**Table 5D. LVDS DC Characteristics, $V_{DD}$ = 3.3V ± 5%or 2.5V, ± 5%$T_A$ = -40°C to 85°C**

| Symbol | Parameter | Test Conditions | Minimum | Typical | Maximum | Units |
|---|---|---|---|---|---|---|
| $V_{OD}$ | Differential Output Voltage | | 247 | 350 | 454 | mV |
| $\Delta V_{OD}$ | $V_{OD}$ Magnitude Change | | | | 50 | mV |
| $V_{OS}$ | Offset Voltage | | 1.0 | 1.20 | 1.375 | V |
| $\Delta V_{OS}$ | $V_{OS}$ Magnitude Change | | | | 50 | mV |


© 2019 Renesas Electronics Corporation

## AC Electrical Characteristics

**Table 6. AC Characteristics, $V_{DD}$ = 3.3V ± 5% or 2.5V ± 5%, $T_A$ = -40°C to 85°C**

| Symbol | Parameter | Test Conditions | Minimum | Typical | Maximum | Units |
|---|---|---|---|---|---|---|
| $f_{OUT}$ | Output Frequency Q, nQ | Output Divider, *N* = 3 to126 | 15.476 | | 866.67 | MHz |
| | | Output Divider, *N* = 2 | 975 | | 1,300 | MHz |
| $f_I$ | Initial Accuracy | Measured at 25°C | | | ±10 | ppm |
| $f_S$ | Temperature Stability | Option code = A or B | | | ±100 | ppm |
| | | Option code = E or F | | | ±50 | ppm |
| | | Option code = K or L | | | ±20 | ppm |
| $f_A$ | Aging | Frequency drift over 10 year life | | | ±3 | ppm |
| | | Frequency drift over 15 year life | | | ±5 | ppm |
| $f_T$ | Total Stability | Option code A or B (10 year life) | | | ±113 | ppm |
| | | Option code E or F (10 year life) | | | ±63 | ppm |
| | | Option code K or L (10 year life) | | | ±33 | ppm |
| *t*jit(cc) | Cycle-to-Cycle Jitter; NOTE 1 | | | | 20 | ps |
| *t*jit(per) | RMS Period Jitter; NOTE 1 | | | 2.85 | 4 | ps |
| *t*jit(Ø) | RMS Phase Jitter (Random): Fractional PLL feedback and $f_{XTAL}$=100.000MHz (2xxx order codes) | 17 MHz ≤ $f_{OUT}$ ≤ 1300 MHz, NOTE 2,3,4 | | 0.440 | 0.995 | ps |
| | RMS Phase Jitter (Random); Integer PLL feedback and $f_{XTAL}$=100.00MHz (1xxx order codes) | 500 MHz ≤ $f_{OUT}$ ≤ 1300 MHz, NOTE 2,3,4 | | 0.240 | 0.390 | ps |
| | | 125 MHz ≤ $f_{OUT}$ < 500 MHz, NOTE 2,3,4 | | 0.245 | 0.425 | ps |
| | | 17 MHz ≤ $f_{OUT}$ < 125 MHz, NOTE 2,3,4 | | 0.350 | 0.555 | ps |
| | | $f_{OUT}$ = 156.25 MHz, NOTE 2, 3, 4 | | 0.253 | | ps |
| | | $f_{OUT}$ = 156.25 MHz,NOTE 2, 3, 5 | | 0.263 | | ps |
| | RMS Phase Jitter (Random) Fractional PLL feedback and $f_{XTAL}$=114.285MHz (0xxx order codes) | 17 MHz ≤ $f_{OUT}$ ≤ 1300 MHz, NOTE 2, 3, 4 | | 0.475 | 0.990 | ps |
| $\Phi_N$(100) | Single-side band phase noise, 100Hz from Carrier | 156.25MHz | | -94.7 | | dBc/Hz |
| $\Phi_N$(1k) | Single-side band phase noise, 1kHz from Carrier | 156.25MHz | | -121.5 | | dBc/Hz |
| $\Phi_N$(10k) | Single-side band phase noise, 10kHz from Carrier | 156.25MHz | | -130.9 | | dBc/Hz |
| $\Phi_N$(100k) | Single-side band phase noise, 100kHz from Carrier | 156.25MHz | | -137.2 | | dBc/Hz |
| $\Phi_N$(1M) | Single-side band phase noise, 1MHz from Carrier | 156.25MHz | | -138.9 | | dBc/Hz |
| $\Phi_N$(10M) | Single-side band phase noise, 10MHz from Carrier | 156.25MHz | | -153.7 | | dBc/Hz |
| PSNR | Power Supply Noise Rejection | 50mV Sinusoidal Noise 1kHz - 50kHz | | -54 | | dB |
| $t_R$ / $t_F$ | Output Rise/Fall Time | 20% to 80% | 100 | | 425 | ps |


© 2019 Renesas Electronics Corporation

| Symbol | Parameter | Test Conditions | Minimum | Typical | Maximum | Units |
|---|---|---|---|---|---|---|
| odc | Output Duty Cycle | | 45 | | 55 | % |
| $t_{STARTUP}$ | Oscillator Start-Up Time | | | | 20 | ms |
| $t_{SET}$ | Output frequency settling time after FSEL0 and FSEL1 values are changed | | | 470 | | µs |

NOTE: Electrical parameters are guaranteed over the specified ambient operating temperature range, which is established when the device is mounted in a test socket with maintained transverse airflow greater than 500 lfpm. The device will meet specifications after thermal equilibrium has been reached under these conditions.
NOTE: XTAL parameters (initial accuracy, temperature stability, aging and total stability) are guaranteed by manufacturing.
NOTE 1: This parameter is defined in accordance with JEDEC standard 65.
NOTE 2: Please refer to the phase noise plots.
NOTE 3: Please see the FemtoClockNG Ceramic 5x7 Modules Programming guide for more information on PLL feedback modes and the optimum configuration for phase noise. Integer PLL feedback is the default operation for the dddd = 1xxx order codes and configures *DSM_ENA* = 0 and *ADC_EN* = 0..
NOTE 4: Integration range: 12kHz-20MHz.
NOTE 5: Integration range: 1kHz-40MHz.


© 2019 Renesas Electronics Corporation

## Typical Phase Noise at 156.25MHz (12kHz - 20MHz)

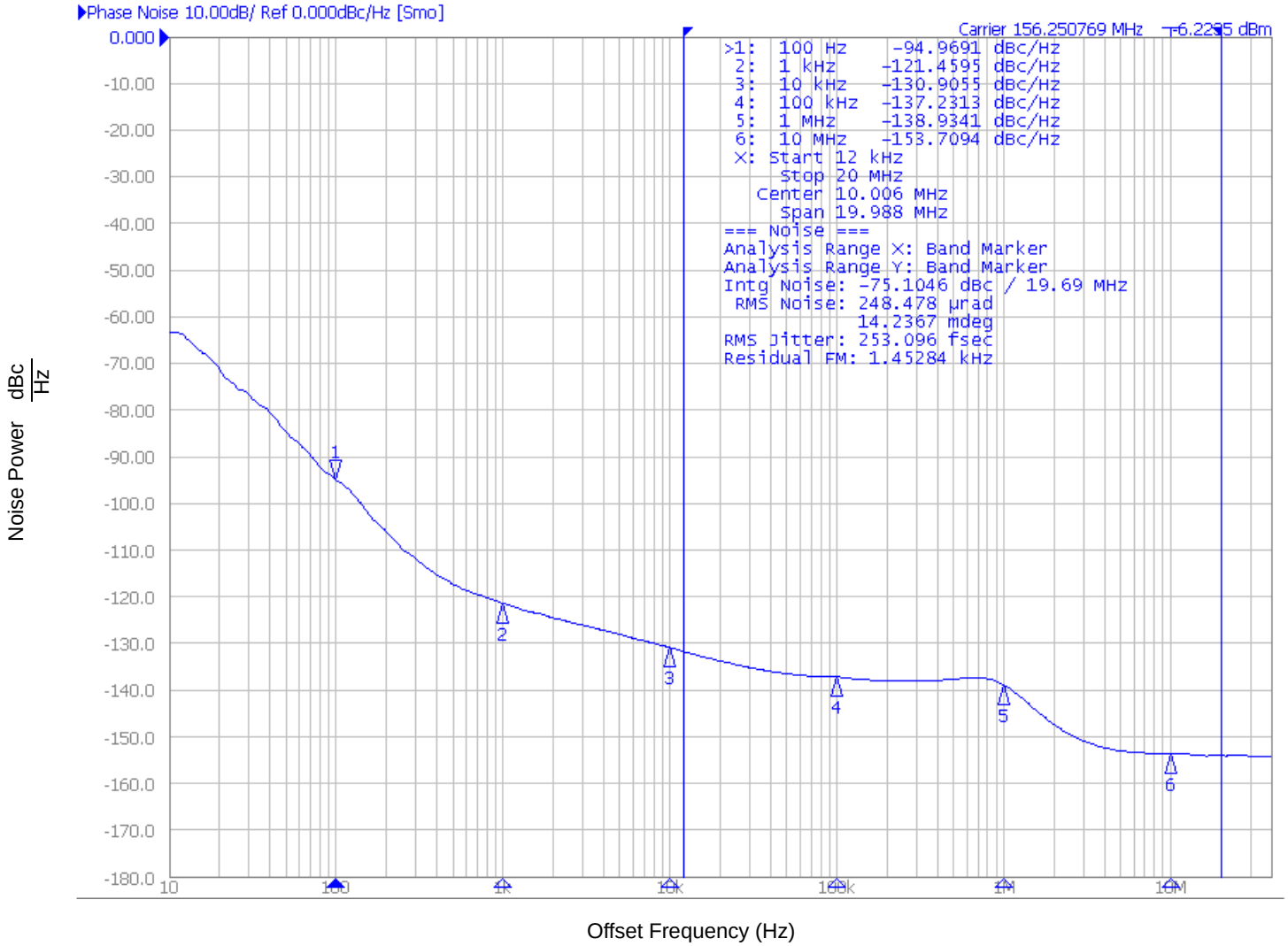


RMS Phase Noise (Random) for Integer PLL Feedback and $f_{XTAL}$=100.000MHz.


© 2019 Renesas Electronics Corporation

# Parameter Measurement Information

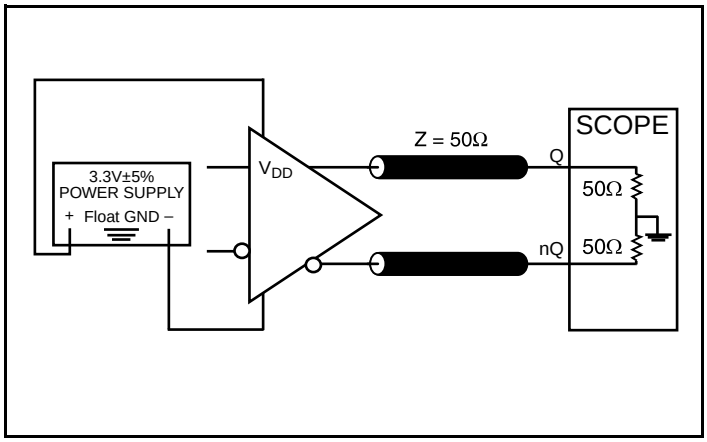


**3.3V LVDS Output Load AC Test Circuit**

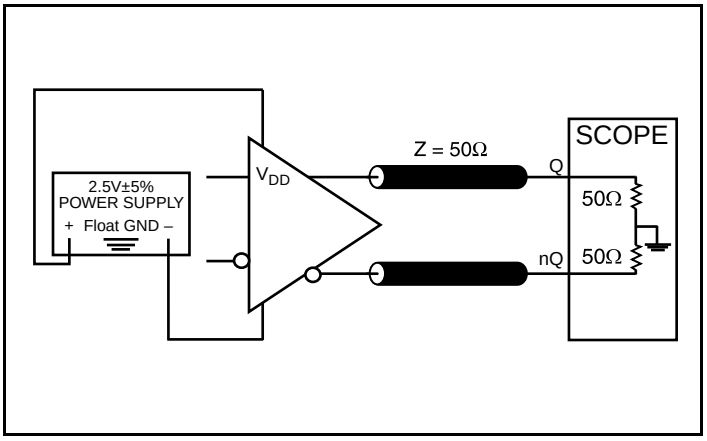


**2.5V LVDS Output Load AC Test Circuit**

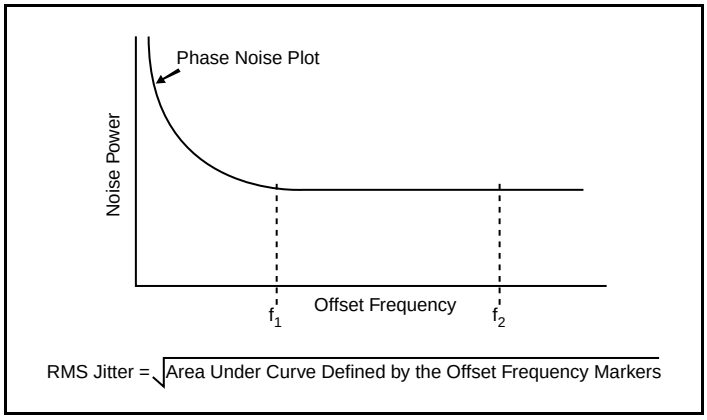


**RMS Phase Jitter**

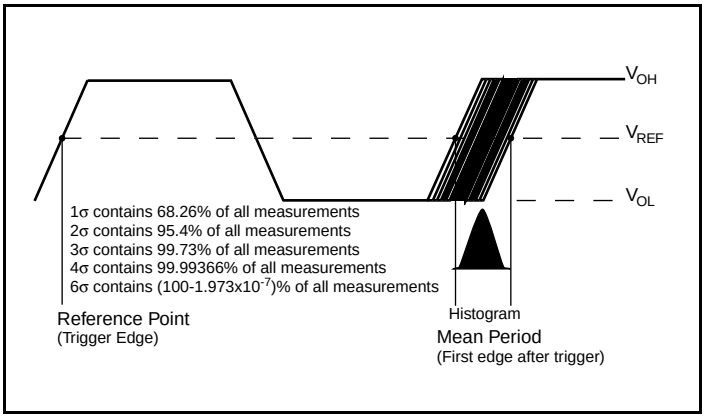


**Period Jitter**

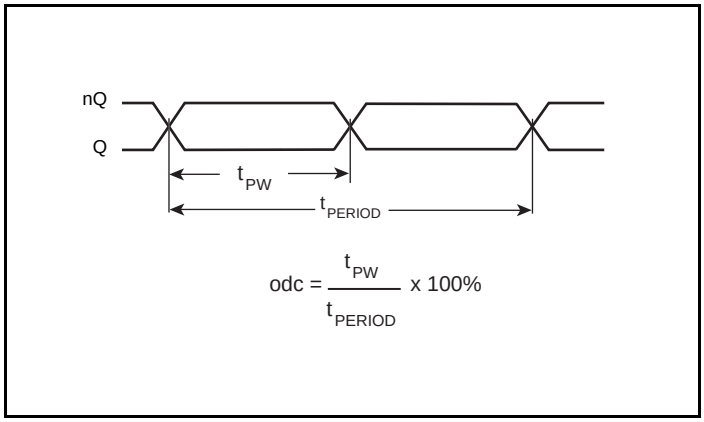


**Output Duty Cycle/Pulse Width/Period**

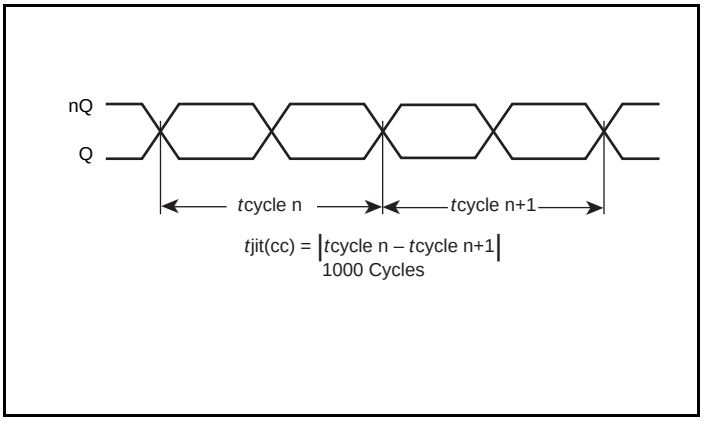


**Cycle-to-Cycle Jitter**


© 2019 Renesas Electronics Corporation

## Parameter Measurement Information (continued)

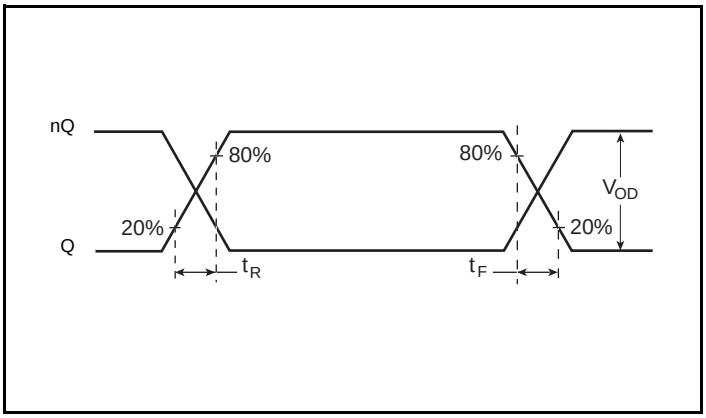


**Output Rise/Fall Time**

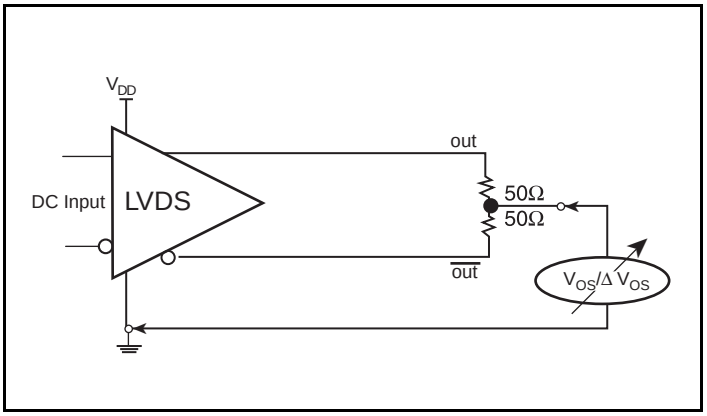


**Offset Voltage Setup**

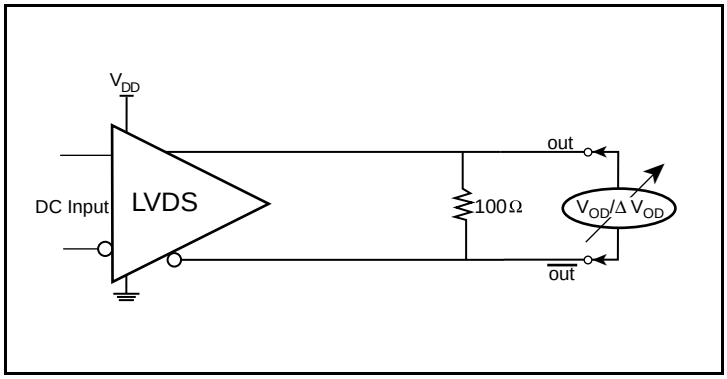


**Differential Output Voltage Setup**


© 2019 Renesas Electronics Corporation

# Applications Information

## Recommendations for Unused Input Pins

### Inputs:

#### LVCMOS Select Pins

All control pins have internal pulldowns; additional resistance is not required but can be added for additional protection. A 1kΩ resistor can be used.

## LVDS Driver Termination

For a general LVDS interface, the recommended value for the termination impedance ($Z_T$) is between 90Ω and 132Ω. The actual value should be selected to match the differential impedance ($Z_0$) of your transmission line. A typical point-to-point LVDS design uses a 100Ω parallel resistor at the receiver and a 100Ω differential transmission-line environment. In order to avoid any transmission-line reflection issues, the components should be surface mounted and must be placed as close to the receiver as possible. IDT offers a full line of LVDS compliant devices with two types of output structures: current source and voltage source. The standard termination schematic as shown in *Figure 1A* can be used with either type of output structure. *Figure 1B*, which can also be used with both output types, is an optional termination with center tap capacitance to help filter common mode noise. The capacitor value should be approximately 50pF. If using a non-standard termination, it is recommended to contact IDT and confirm if the output structure is current source or voltage source type. In addition, since these outputs are LVDS compatible, the input receiver's amplitude and common-mode input range should be verified for compatibility with the output.

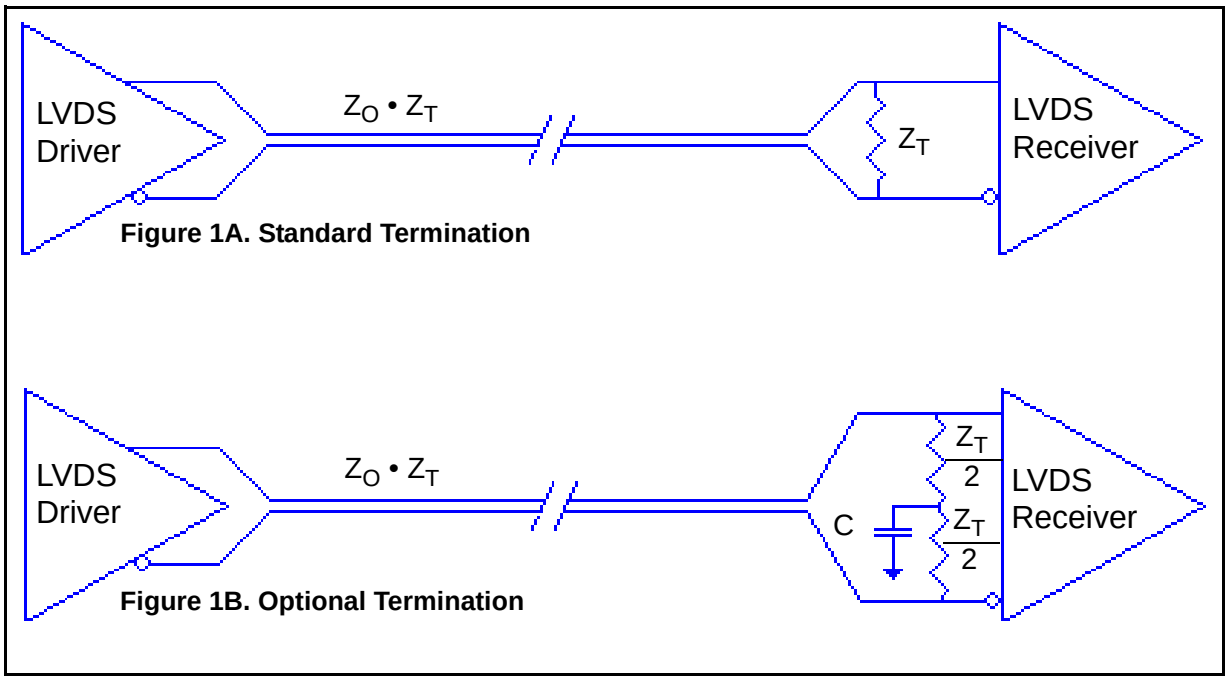


**LVDS Termination**


© 2019 Renesas Electronics Corporation

## Schematic Layout

*Figure 2* shows an example of IDT8N4Q001 application schematic. In this example, the device is operated at $V_{DD}$ = 3.3V. As with any high speed analog circuitry, the power supply pins are vulnerable to noise. To achieve optimum jitter performance, power supply isolation is required.

In order to achieve the best possible filtering, it is recommended that the placement of the filter components be on the device side of the PCB as close to the power pins as possible. If space is limited, the 0.1uF capacitor in each power pin filter should be placed on the device side of the PCB and the other components can be placed on the opposite side.

Power supply filter recommendations are a general guideline to be used for reducing external noise from coupling into the devices. The filter performance is designed for wide range of noise frequencies. This low-pass filter starts to attenuate noise at approximately 10kHz. If a specific frequency noise component is known, such as switching power supply frequencies, it is recommended that component values be adjusted and if required, additional filtering be added. Additionally, good general design practices for power plane voltage stability suggests adding bulk capacitances in the local area of all devices.

The schematic example focuses on functional connections and is not configuration specific. Refer to the pin description and functional tables in the datasheet to ensure the logic control inputs are properly set.

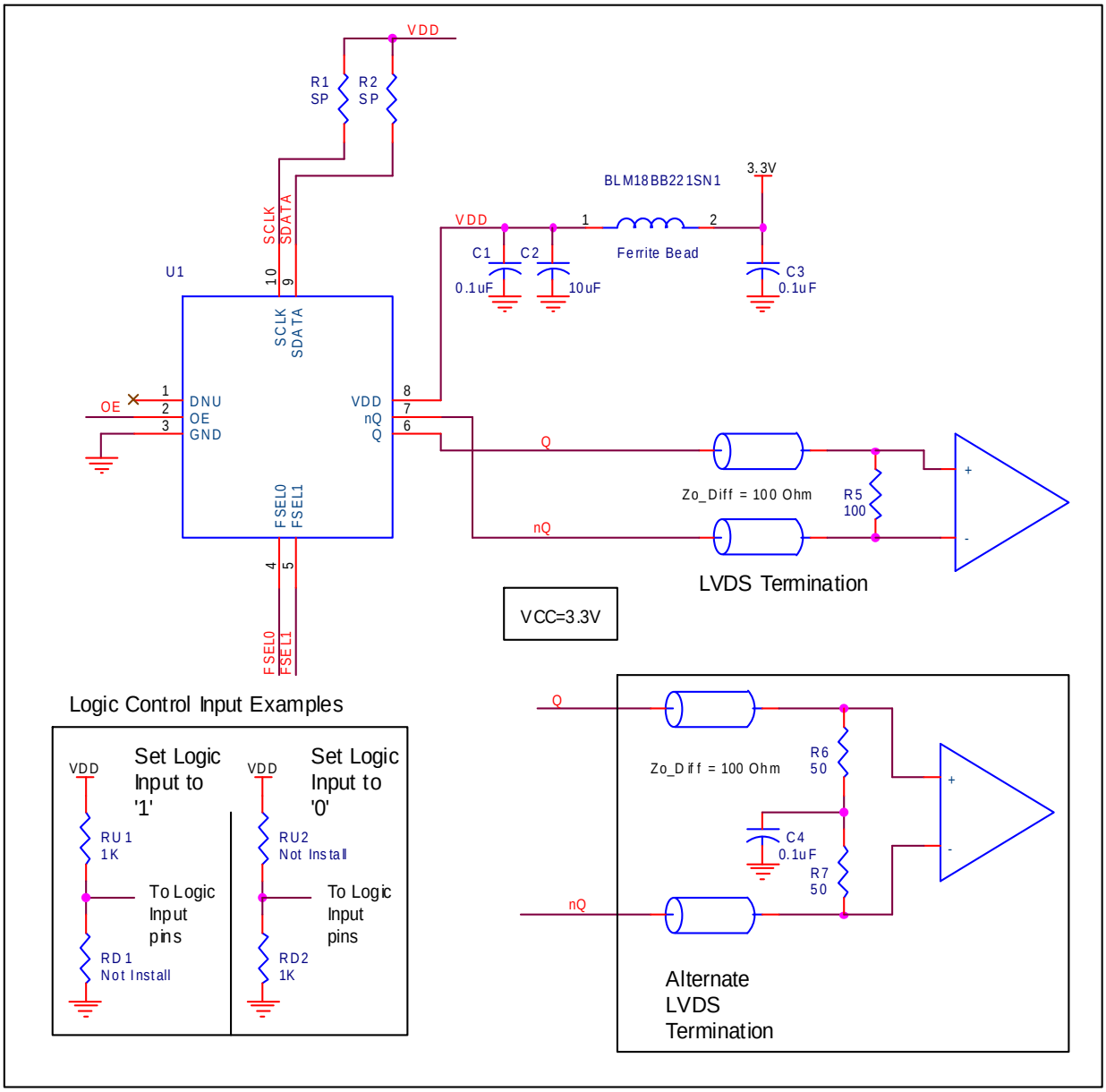


**Figure 2. IDT8N4Q001 Application Schematic**


© 2019 Renesas Electronics Corporation

# Power Considerations

This section provides information on power dissipation and junction temperature for the IDT8N4Q001.
Equations and example calculations are also provided.

### 1. Power Dissipation.

The total power dissipation for the ICS844S42I is the sum of the core power plus the power dissipated in the load(s). The following is the power dissipation for $V_{DD}$ = 3.3V + 5% = 3.465V, which gives worst case results.

- Power $(core)_{MAX} = V_{DD_MAX} * I_{DD_MAX}$ = 3.465V * 160mA = **554.4mW**

### 2. Junction Temperature.

Junction temperature, Tj, is the temperature at the junction of the bond wire and bond pad directly affects the reliability of the device. The maximum recommended junction temperature is 125°C. Limiting the internal transistor junction temperature, Tj, to 125°C ensures that the bond wire and bond pad temperature remains below 125°C.

The equation for Tj is as follows: $Tj = \theta_{JA} * Pd_total + T_A$

Tj = Junction Temperature

$\theta_{JA}$ = Junction-to-Ambient Thermal Resistance

Pd_total = Total Device Power Dissipation (example calculation is in section 1 above)

$T_A$ = Ambient Temperature

In order to calculate junction temperature, the appropriate junction-to-ambient thermal resistance $\theta_{JA}$ must be used. Assuming no air flow and a multi-layer board, the appropriate value is 49.4°C/W per Table 7 below.

Therefore, Tj for an ambient temperature of 85°C with all outputs switching is:

85°C + 0.554W * 49.4°C/W = 112.4°C. This is below the limit of 125°C.

This calculation is only an example. Tj will obviously vary depending on the number of loaded outputs, supply voltage, air flow and the type of board (multi-layer).

**Table 7. Thermal Resistance $\theta_{JA}$ for 10 Lead Ceramic 5mm x 7mm Package, Forced Convection**

| $\theta_{JA}$ **by Velocity** | | | |
|---|---|---|---|
| Meters per Second | **0** | **1** | **2.5** |
| Multi-Layer PCB, JEDEC Standard Test Boards | 49.4°C/W | 44.2°C/W | 41.0°C/W |


© 2019 Renesas Electronics Corporation

## Reliability Information

**Table 8. $\theta_{JA}$ vs. Air Flow Table for a 10-lead Ceramic 5mm x 7mm Package**

| $\theta_{JA}$ vs. Air Flow | | | |
|---|---|---|---|
| Meters per Second | **0** | **1** | **2.5** |
| Multi-Layer PCB, JEDEC Standard Test Boards | 49.4°C/W | 44.2°C/W | 41.0°C/W |

## Transistor Count

The transistor count for IDT8N4Q001 is: 47,372


© 2019 Renesas Electronics Corporation

## Package Outline and Package Dimensions

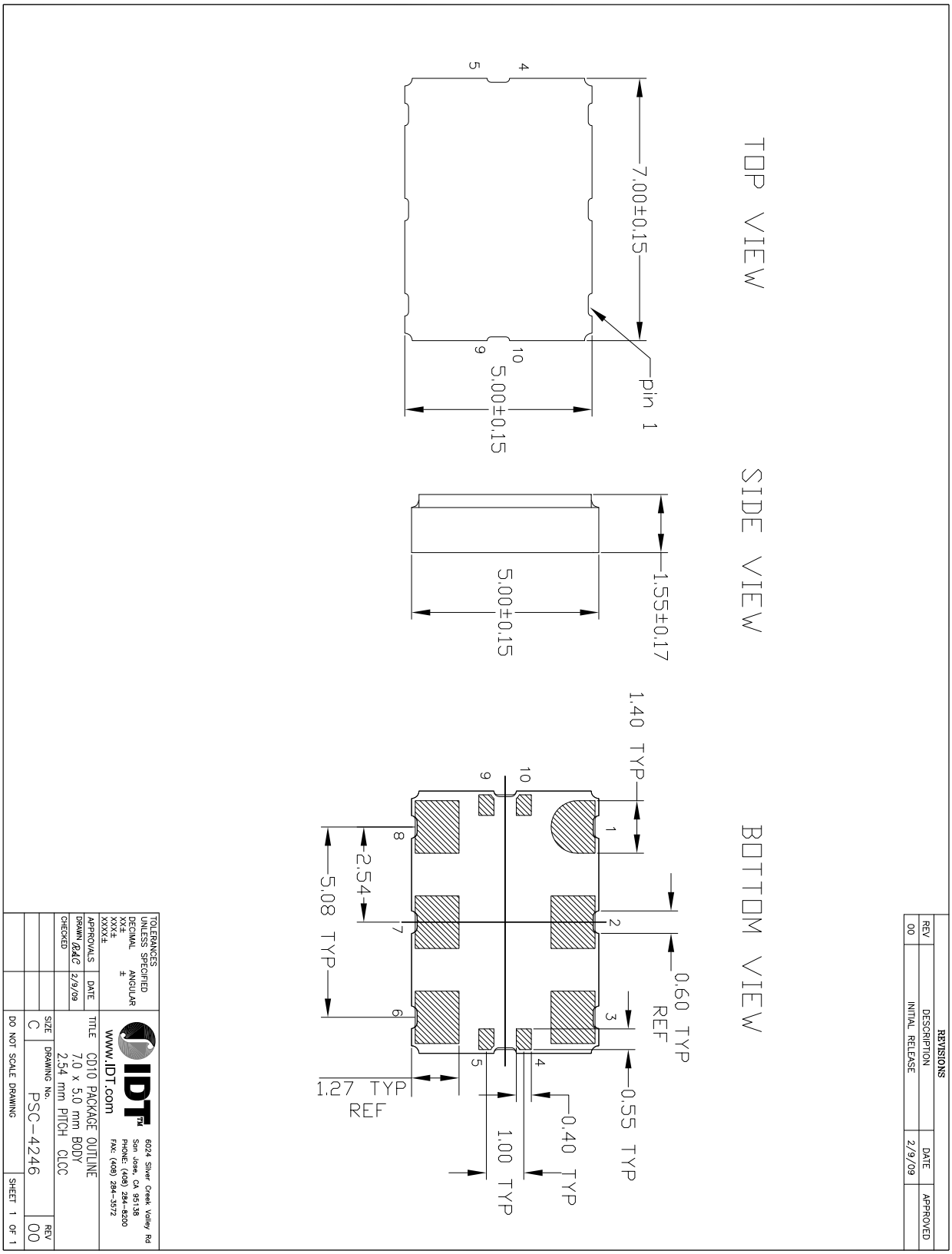



© 2019 Renesas Electronics Corporation

# Ordering Information for FemtoClock NG Ceramic-Package XO and VCXO Products

The programmable VCXO and XO devices support a variety of devices options such as the output type, number of default frequencies, internal crystal frequency, power supply voltage, ambient temperature range and the frequency accuracy. The device options, default frequencies and default VCXO pull range must be specified at the time of order and are programmed by IDT before the shipment. The table below specifies the available order codes, including the device options and default frequency configurations. Example part number: the order code 8N3QV01FG-0001CDI specifies a programmable, quad default-frequency VCXO with a voltage supply of 2.5V, a LVPECL output, a ±50 ppm crystal frequency accuracy, contains a 114.285MHz internal crystal as frequency source, industrial temperature range, a lead-free (6/6 RoHS) 10-lead ceramic 5mm x 7mm x 1.55mm package and is factory-programmed to the default frequencies of 100MHz, 122.88MHz, 125MHz and 156.25MHz and to the VCXO pull range of minimum ±100 ppm.

Other default frequencies and order codes are available from IDT on request. For more information on available default frequencies, see the *FemtoClock NG Ceramic-Package XO and VCXO Ordering Product Information* document.

**Part/Order Number**

**8N X X XXX X X - dddd XX X X**

**FemtoClock NG**

**I/O Identifier**
**0**: LVCMOS
**3**: LVPECL
**4**: LVDS

**Number of Default Frequencies**
**S**: 1: Single
**D**: 2: Dual
**Q**: 4: Quad

**Part Number**

| | Function | #pins | OE fct. at pin |
|---|---|---|---|
| **001** | XO | 10 | OE@2 |
| **003** | XO | 10 | OE@1 |
| **V01** | VCXO | 10 | OE@2 |
| **V03** | VCXO | 10 | OE@1 |
| **V75** | VCXO | 6 | OE@2 |
| **V76** | VCXO | 6 | nOE@2 |
| **V85** | VCXO | 6 | — |
| **085** | XO | 6 | OE@1 |
| **270** | XO | 6 | OE@1 |
| **271** | XO | 6 | OE@2 |
| **272** | XO | 6 | nOE@2 |
| **273** | XO | 6 | nOE@1 |

**Shipping Package**
**8**: Tape & Reel
(no letter): Tray

**Ambient Temperature Range**
"**I**": Industrial: ($T_A$ = -40°C to 85°C)
(no letter) : ($T_A$ = 0°C to 70°C)

**Package Code**
**CD**: Lead-Free, 6/10-lead ceramic 5mm x 7mm x 1.55mm

**Default-Frequency and VCXO Pull Range**
*See* document *FemtoClock NG Ceramic-Package XO and VCXO Ordering Product Information.*

| dddd | $f_{XTAL}$ (MHz) | PLL feedback | Use for |
|---|---|---|---|
| **0000** to **0999** | 114.285 | Fractional | VCXO, XO |
| **1000** to **1999** | 100.000 | Integer | XO |
| **2000** to **2999** | | Fractional | XO |

Last digit = **L**: configuration pre-programmed and not changable

**Die Revision**
**G**

**Option Code (Supply Voltage and Frequency-Stability)**
**A**: $V_{CC}$ = 3.3V±5%, ±100ppm
**B**: $V_{CC}$ = 2.5V±5%, ±100ppm
**E**: $V_{CC}$ = 3.3V±5%, ±50ppm
**F**: $V_{CC}$ = 2.5V±5%, ±50ppm
**K**: $V_{CC}$ = 3.3V±5%, ±20ppm
**L**: $V_{CC}$ = 2.5V±5%, ±20ppm


© 2019 Renesas Electronics Corporation

## Table 9. Device Marking

| | | |
|---|---|---|
| **Marking** | Industrial Temperature Range ($T_A$ = -40°C to 85°C) | Commercial Temperature Range ($T_A$ = 0°C to 70°C) |
| | IDT8N4**x**001**y**G-<br>**dddd**CDI | IDT8N4**x**001**y**G-<br>**dddd**CD |
| | **x** = Number of Default Frequencies, **y** = Option Code, **dddd**=Default-Frequency and VCXO Pull Range | |


© 2019 Renesas Electronics Corporation

## Revision History Sheet

| Rev | Table | Page | Description of Change | Date |
|---|---|---|---|---|
| A | 9 | 18 | Table 9 Device Marking, corrected marking. | 3/6/12 |


© 2019 Renesas Electronics Corporation

## Notice

1. Descriptions of circuits, software and other related information in this document are provided only to illustrate the operation of semiconductor products and application examples. You are fully responsible for the incorporation or any other use of the circuits, software, and information in the design of your product or system. Renesas Electronics disclaims any and all liability for any losses and damages incurred by you or third parties arising from the use of these circuits, software, or information.
2. Renesas Electronics hereby expressly disclaims any warranties against and liability for infringement or any other claims involving patents, copyrights, or other intellectual property rights of third parties, by or arising from the use of Renesas Electronics products or technical information described in this document, including but not limited to, the product data, drawings, charts, programs, algorithms, and application examples.
3. No license, express, implied or otherwise, is granted hereby under any patents, copyrights or other intellectual property rights of Renesas Electronics or others.
4. You shall not alter, modify, copy, or reverse engineer any Renesas Electronics product, whether in whole or in part. Renesas Electronics disclaims any and all liability for any losses or damages incurred by you or third parties arising from such alteration, modification, copying or reverse engineering.
5. Renesas Electronics products are classified according to the following two quality grades: "Standard" and "High Quality". The intended applications for each Renesas Electronics product depends on the product's quality grade, as indicated below.
   "Standard": Computers; office equipment; communications equipment; test and measurement equipment; audio and visual equipment; home electronic appliances; machine tools; personal electronic equipment; industrial robots; etc.
   "High Quality": Transportation equipment (automobiles, trains, ships, etc.); traffic control (traffic lights); large-scale communication equipment; key financial terminal systems; safety control equipment; etc.
   Unless expressly designated as a high reliability product or a product for harsh environments in a Renesas Electronics data sheet or other Renesas Electronics document, Renesas Electronics products are not intended or authorized for use in products or systems that may pose a direct threat to human life or bodily injury (artificial life support devices or systems; surgical implantations; etc.), or may cause serious property damage (space system; undersea repeaters; nuclear power control systems; aircraft control systems; key plant systems; military equipment; etc.). Renesas Electronics disclaims any and all liability for any damages or losses incurred by you or any third parties arising from the use of any Renesas Electronics product that is inconsistent with any Renesas Electronics data sheet, user's manual or other Renesas Electronics document.
6. When using Renesas Electronics products, refer to the latest product information (data sheets, user's manuals, application notes, "General Notes for Handling and Using Semiconductor Devices" in the reliability handbook, etc.), and ensure that usage conditions are within the ranges specified by Renesas Electronics with respect to maximum ratings, operating power supply voltage range, heat dissipation characteristics, installation, etc. Renesas Electronics disclaims any and all liability for any malfunctions, failure or accident arising out of the use of Renesas Electronics products outside of such specified ranges.
7. Although Renesas Electronics endeavors to improve the quality and reliability of Renesas Electronics products, semiconductor products have specific characteristics, such as the occurrence of failure at a certain rate and malfunctions under certain use conditions. Unless designated as a high reliability product or a product for harsh environments in a Renesas Electronics data sheet or other Renesas Electronics document, Renesas Electronics products are not subject to radiation resistance design. You are responsible for implementing safety measures to guard against the possibility of bodily injury, injury or damage caused by fire, and/or danger to the public in the event of a failure or malfunction of Renesas Electronics products, such as safety design for hardware and software, including but not limited to redundancy, fire control and malfunction prevention, appropriate treatment for aging degradation or any other appropriate measures. Because the evaluation of microcomputer software alone is very difficult and impractical, you are responsible for evaluating the safety of the final products or systems manufactured by you.
8. Please contact a Renesas Electronics sales office for details as to environmental matters such as the environmental compatibility of each Renesas Electronics product. You are responsible for carefully and sufficiently investigating applicable laws and regulations that regulate the inclusion or use of controlled substances, including without limitation, the EU RoHS Directive, and using Renesas Electronics products in compliance with all these applicable laws and regulations. Renesas Electronics disclaims any and all liability for damages or losses occurring as a result of your noncompliance with applicable laws and regulations.
9. Renesas Electronics products and technologies shall not be used for or incorporated into any products or systems whose manufacture, use, or sale is prohibited under any applicable domestic or foreign laws or regulations. You shall comply with any applicable export control laws and regulations promulgated and administered by the governments of any countries asserting jurisdiction over the parties or transactions.
10. It is the responsibility of the buyer or distributor of Renesas Electronics products, or any other party who distributes, disposes of, or otherwise sells or transfers the product to a third party, to notify such third party in advance of the contents and conditions set forth in this document.
11. This document shall not be reprinted, reproduced or duplicated in any form, in whole or in part, without prior written consent of Renesas Electronics.
12. Please contact a Renesas Electronics sales office if you have any questions regarding the information contained in this document or Renesas Electronics products.

(Note1) "Renesas Electronics" as used in this document means Renesas Electronics Corporation and also includes its directly or indirectly controlled subsidiaries.
(Note2) "Renesas Electronics product(s)" means any product developed or manufactured by or for Renesas Electronics.

(Rev.4.0-1 November 2017)


## Corporate Headquarters

TOYOSU FORESIA, 3-2-24 Toyosu,
Koto-ku, Tokyo 135-0061, Japan
www.renesas.com


## Contact Information

For further information on a product, technology, the most up-to-date version of a document, or your nearest sales office, please visit:
www.renesas.com/contact/

## Trademarks

Renesas and the Renesas logo are trademarks of Renesas Electronics Corporation. All trademarks and registered trademarks are the property of their respective owners.

© 2020 Renesas Electronics Corporation. All rights reserved.