General Description

The IDT8N4QV01 is a Quad-Frequency Programmable VCXO with very flexible frequency and pull-range programming capabilities. The device uses IDT's fourth generation FemtoClock® NG technology for an optimum of high clock frequency and low phase noise performance. The device accepts 2.5V or 3.3V supply and is packaged in a small, lead-free (RoHS 6) 10-lead ceramic 5mm x 7mm x 1.55mm package.

Besides the 4 default power-up frequencies set by the FSEL0 and FSEL1 pins, the IDT8N4QV01 can be programmed via the I^2C interface to any output clock frequency between 15.476MHz to 866.67MHz and from 975MHz to 1,300MHz to a very high degree of precision with a frequency step size of 435.9Hz ÷*N* (*N* is the PLL output divider). Since the FSEL0 and FSEL1 pins are mapped to 4 independent PLL, P, M and N divider registers (P, MINT, MFRAC and N), reprogramming those registers to other frequencies under control of FSEL0 and FSEL1 is supported. The extended temperature range supports wireless infrastructure, tele-communication and networking end equipment requirements.

Features

- Fourth generation FemtoClock® NG technology
- Programmable clock output frequency from 15.476MHz to 866.67MHz and from 975MHz to 1,300MHz
- Four power-up default frequencies (see part number order codes), re-programmable by I^2C
- I^2C programming interface for the output clock frequency, APR and internal PLL control registers
- Frequency programming resolution is 435.9Hz ÷*N*
- Absolute pull-range (APR) programmable from ±4.5ppm to ±754.5ppm
- One 2.5V or 3.3V LVDS differential clock output
- Two control inputs for the power-up default frequency
- LVCMOS/LVTTL compatible control inputs
- RMS phase jitter @ 156.25MHz (12kHz - 20MHz): 0.494ps (typical)
- RMS phase jitter @ 156.25MHz (1kHz - 40MHz): 0.594ps (typical)
- 2.5V or 3.3V supply voltage modes
- -40°C to 85°C ambient operating temperature
- Lead-free (RoHS 6) packaging

Block Diagram

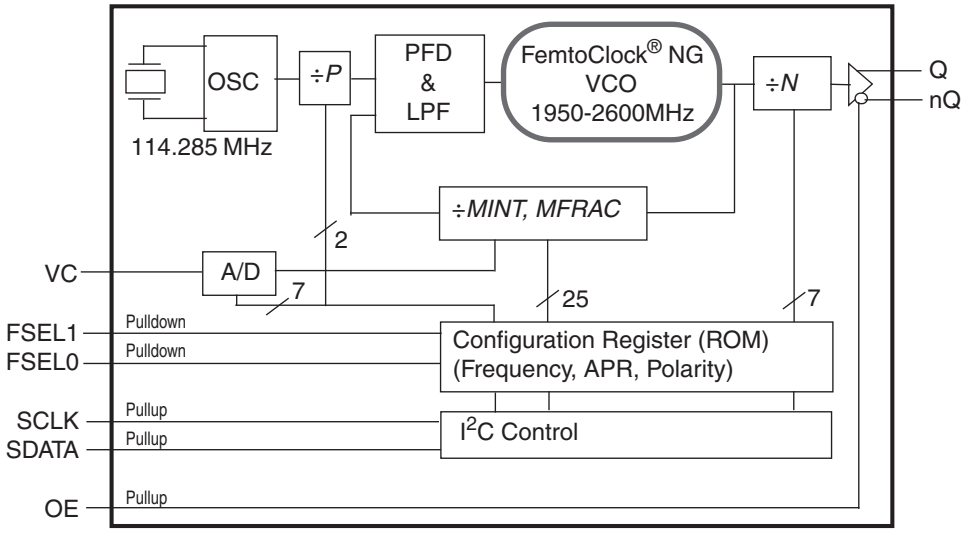

Pin Assignment

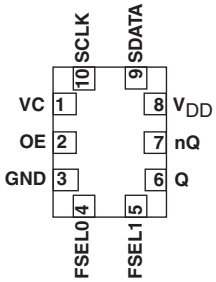

IDT8N4QV01 REV G DATA SHEET
10-lead ceramic 5mm x 7mm x 1.55mm package body
CD Package
Top View

© 2019 Renesas Electronics Corporation

Table 1. Pin Descriptions

Number	Name	Type		Description
1	VC	Input		VCXO Control Voltage. The control voltage versus frequency characteristics are set by the ADC_GAIN[5:0] register bits.
2	OE	Input	Pullup	Output enable pin. See Table 3B for function. LVCMOS/LVTTL interface levels.
3	GND	Power		Power supply ground.
4, 5	FSEL0, FSEL1	Input	Pulldown	Default frequency select pins. See Table 3A for function and Table 8 for the default frequency order codes. LVCMOS/LVTTL interface levels.
6, 7	Q, nQ	Output		Differential clock output. LVDS interface levels.
8	V_{DD}	Power		Power supply pin.
9	SDATA	Input	Pullup	I^2C Data Input. LVCMOS/LVTTL interface levels.
10	SCLK	Input	Pullup	I^2C Clock Input. LVCMOS/LVTTL interface levels.

NOTE: *Pullup* and *Pulldown* refer to internal input resistors. See Table 2, *Pin Characteristics,* for typical values.

Table 2. Pin Characteristics

Symbol	Parameter	Test Conditions	Minimum	Typical	Maximum	Units
C_{IN}	Input Capacitance	FSEL[1:0], SDATA, SCLK		5.5		pF
		VC		10		pF
R_{PULLUP}	Input Pullup Resistor			50		kΩ
$R_{PULLDOWN}$	Input Pulldown Resistor			50		kΩ

© 2019 Renesas Electronics Corporation

Function Tables

Table 3A. Default Frequency Selection

Input		Operation
FSEL1	FSEL0	
0 (default)	0 (default)	Default frequency 0
0	1	Default frequency 1
1	0	Default frequency 2
1	1	Default frequency 3

NOTE: The default frequency is the output frequency after power-up. One of four default frequencies is selected by FSEL[1:0]. See programming section for details.

Table 3B. OE Configuration

Input	Output Enable
OE	
0	Outputs Q, nQ are in high-impedance state.
1 (default)	Outputs are enabled.

NOTE: OE is an asynchronous control.

© 2019 Renesas Electronics Corporation

Block Diagram with Programming Registers

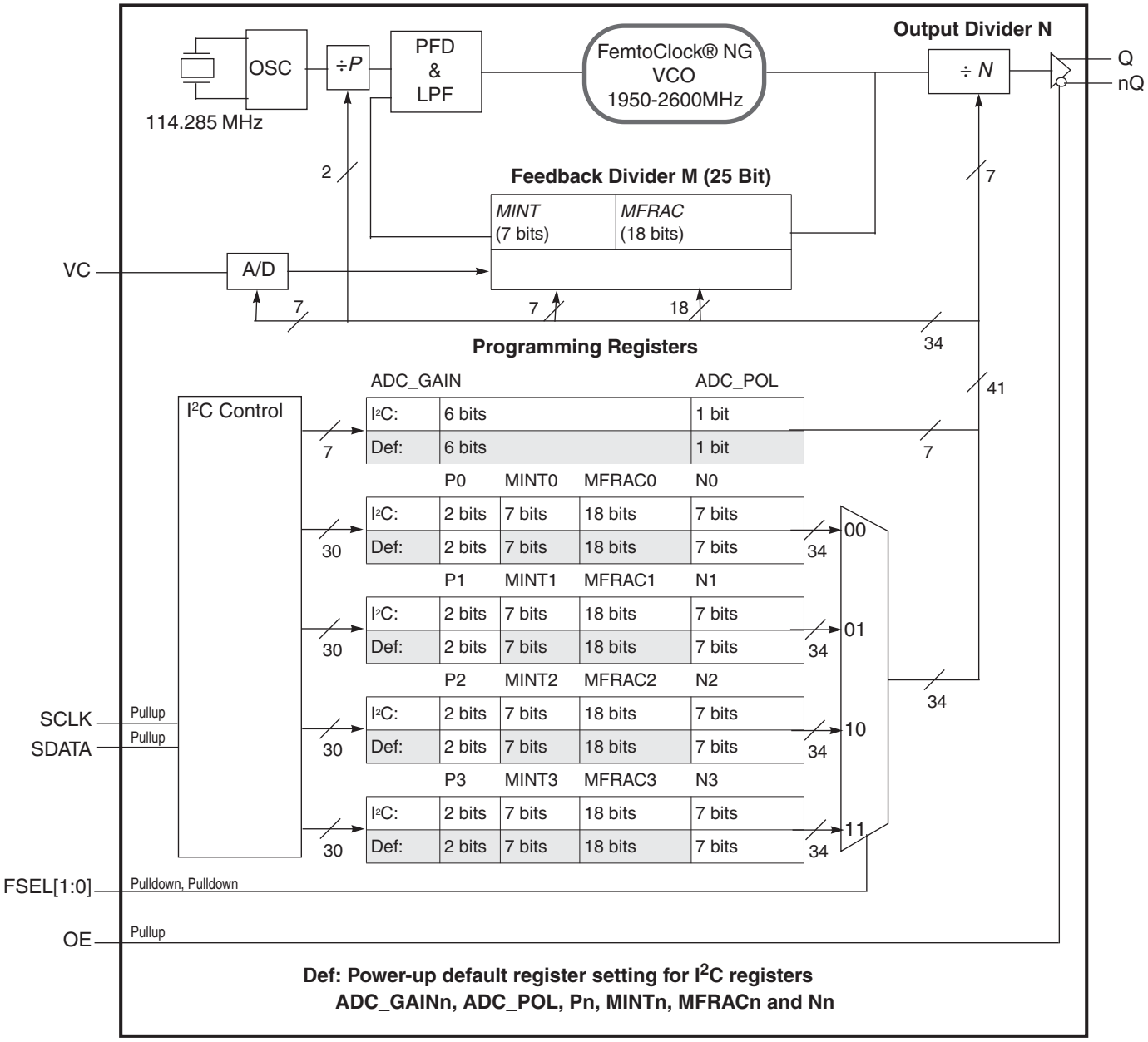

© 2019 Renesas Electronics Corporation

Principles of Operation

The block diagram consists of the internal 3rd overtone crystal and oscillator which provide the reference clock f_{XTAL} of either 114.285MHz or 100MHz. The PLL includes the FemtoClock NG VCO along with the Pre-divider (*P*), the feedback divider (*M*) and the post divider (*N*). The *P*, *M*, and *N* dividers determine the output frequency based on the f_{XTAL} reference and must be configured correctly for proper operation. The feedback divider is fractional supporting a huge number of output frequencies. The configuration of the feedback divider to integer-only values results in an improved output phase noise characteristics at the expense of the range of output frequencies. In addition, internal registers are used to hold up to four different factory pre-set *P*, *M*, and *N* configuration settings. These default pre-sets are stored in the I^2C registers at power-up. Each configuration is selected via the FSEL[1:0] pins and can be read back using the SCLK and SDATA pins.

The user may choose to operate the device at an output frequency different than that set by the factory. After power-up, the user may write new P, N and M settings into one or more of the four configuration registers and then use the FSEL[1:0] pins to select the newly programmed configuration. Note that the I^2C registers are volatile and a power supply cycle will reload the pre-set factory default conditions.

If the user does choose to write a different *P*, *M*, and *N* configuration, it is recommended to write to a configuration which is not currently selected by FSEL[1:0] and then change to that configuration after the I^2C transaction has completed. Changing the FSEL[1:0] controls results in an immediate change of the output frequency to the selected register values. The *P*, *M*, and *N* frequency configurations support an output frequency range 15.476MHz to 866.67MHz and 975MHz to 1,300MHz.

The devices use the fractional feedback divider with a delta-sigma modulator for noise shaping and robust frequency synthesis capability. The relatively high reference frequency minimizes phase noise generated by frequency multiplication and allows more efficient shaping of noise by the delta-sigma modulator.

The output frequency is determined by the 2-bit pre-divider (*P*), the feedback divider (M) and the 7-bit post divider (*N*). The feedback divider (*M*) consists of both a 7-bit integer portion (*MINT*) and an 18-bit fractional portion (*MFRAC*) and provides the means for high-resolution frequency generation. The output frequency f_{OUT} is calculated by:

$$f_{OUT} = f_{XTAL} \cdot \frac{1}{P \cdot N} \cdot \left[MINT + \frac{MFRAC + 0.5}{2^{18}} \right] \quad (1)$$

The four configuration registers for the *P, M (MINT & MFRAC)* and *N* dividers which are named Pn, MINTn, MFRACn and Nn with n = 0 to 3. “n” denominates one of the four possible configurations.

As identified previously, the configurations of *P, M (MINT & MFRAC)* and *N* divider settings are stored the I^2C register, and the configuration loaded at power-up is determined by the FSEL[1:0] pins.

Table 4. Frequency Selection

Input		Selects	Register
FSEL1	FSEL0		
0 (def.)	0 (def.)	Frequency 0	P0, MINT0, MFRAC0, N0
0	1	Frequency 1	P1, MINT1, MFRAC1, N1
1	0	Frequency 2	P2, MINT2, MFRAC2, N2
1	1	Frequency 3	P3, MINT3, MFRAC3, N3

Frequency Configuration

An order code is assigned to each frequency configuration programmed by the factory (default frequencies). For more information on the available default frequencies and order codes, please see the Ordering Information Section in this document. For available order codes, see the *FemtoClock NG Ceramic-Package XO and VCXO Ordering Product Information* document.

For more information and guidelines on programming of the device for custom frequency configurations, the register description, the pull-range programming and the serial interface description, see the *FemtoClock NG Ceramic 5x7 Module Programming Guide.*

© 2019 Renesas Electronics Corporation

Absolute Maximum Ratings

NOTE: Stresses beyond those listed under *Absolute Maximum Ratings* may cause permanent damage to the device. These ratings are stress specifications only. Functional operation of product at these conditions or any conditions beyond those listed in the *DC Characteristics or AC Characteristics* is not implied. Exposure to absolute maximum rating conditions for extended periods may affect product reliability.

Item	Rating
Supply Voltage, V_{DD}	3.63V
Inputs, V_I	-0.5V to V_{DD} + 0.5V
Outputs, I_O (SDATA) Outputs, I_O (LVDS) Continuous Current Surge Current	10mA 10mA 15mA
Package Thermal Impedance, θ_{JA}	49.4°C/W (0 mps)
Storage Temperature, T_{STG}	-65°C to 150°C

DC Electrical Characteristics

Table 5A. Power Supply DC Characteristics, V_{DD} = 3.3V ±5%, T_A = -40°C to 85°C

Symbol	Parameter	Test Conditions	Minimum	Typical	Maximum	Units
V_{DD}	Power Supply Voltage		3.135	3.3	3.465	V
I_{DD}	Power Supply Current				160	mA

Table 5B. Power Supply DC Characteristics, V_{DD} = 2.5V ±5%, T_A = -40°C to 85°C

Symbol	Parameter	Test Conditions	Minimum	Typical	Maximum	Units
V_{DD}	Power Supply Voltage		2.375	2.5	2.625	V
I_{DD}	Power Supply Current				155	mA

© 2019 Renesas Electronics Corporation

Table 5C. LVCMOS/LVTTL DC Characteristic, V_{DD} = 3.3V ±5% or 2.5V ±5%, T_A = -40°C to 85°C

Symbol	Parameter		Test Conditions	Minimum	Typical	Maximum	Units
V_{IH}	Input High Voltage	SEL [1:0], OE	V_{CC} =3.3V +5%	1.7		V_{CC} +0.3	V
		SEL [1:0], OE	V_{CC} =2.5V +5%	1.7		V_{CC} +0.3	V
V_{IL}	Input Low Voltage	SEL [1:0]	V_{CC} =3.3V +5%	-0.3		0.5	V
		OE	V_{CC} =3.3V +5%	-0.3		0.8	V
		SEL [1:0]	V_{CC} =2.5V +5%	-0.3		0.5	V
		OE	V_{CC} =2.5V +5%	-0.3		0.8	V
I_{IH}	Input High Current	OE				10	µA
		SDATA, SCLK	V_{DD} = V_{IN} = 3.465V or 2.625V			5	µA
		FSEL0, FSEL1	V_{DD} = V_{IN} = 3.465V or 2.625V			150	µA
I_{IL}	Input Low Current	OE		-500			µA
		SDATA, SCLK	V_{DD} = 3.465V or 2.625V, V_{IN} = 0V	-150			µA
		FSEL0, FSEL1	V_{DD} = 3.465V or 2.625V, V_{IN} = 0V	-5			µA

Table 5D. LVDS DC Characteristics, V_{DD} = 3.3V ±5% or 2.5V ±5%, T_A = -40°C to 85°C

Symbol	Parameter	Test Conditions	Minimum	Typical	Maximum	Units
V_{OD}	Differential Output Voltage		247	350	454	mV
ΔV_{OD}	V_{OD} Magnitude Change				50	mV
V_{OS}	Offset Voltage		1.0	1.20	1.375	V
ΔV_{OS}	V_{OS} Magnitude Change				50	mV

© 2019 Renesas Electronics Corporation

AC Electrical Characteristics

Table 6A. VCXO Control Voltage Input (V_C) Characterisitics, V_{DD} = 3.3V ±5% or 2.5V ±5%, T_A = -40°C to 85°C

Symbol	Parameter	Test Conditions	Minimum	Typical	Maximum	Units
K_V	Oscillator Gain, NOTE 1, 2, 3 V_{DD} = 3.3V	ADC_GAIN[5:0] = 000001		7.57		ppm/V
		ADC_GAIN[5:0] = 000010		15.15		ppm/V
		ADC_GAIN[5:0] = XXXXXX		$2 \cdot 12.5 \div V_{DD}$ ADC_GAIN		ppm/V
		ADC_GAIN[5:0] = 111110		469.69		ppm/V
		ADC_GAIN[5:0] = 111111		477.27		ppm/V
	Oscillator Gain, NOTE 1, 2, 3 V_{DD} = 2.5V	ADC_GAIN[5:0] = 000001		10		ppm/V
		ADC_GAIN[5:0] = 000010		20		ppm/V
		ADC_GAIN[5:0] = XXXXXX		$2 \cdot 12.5 \div V_{DD}$ ADC_GAIN		ppm/V
		ADC_GAIN[5:0] = 111110		620		ppm/V
		ADC_GAIN[5:0] = 111111		630		ppm/V
L_{VC}	Control Voltage Linearity	BSL Variation; NOTE 4	-5	±1	+5	%
		Incremental; NOTE 5	-10	±5	+10	%
BW	Modulation Bandwidth			100		kHz
Z_{VC}	VC Input Impedance			500		kΩ
VC_{NOM}	Nominal Control Voltage			$V_{DD} \div 2$		V
V_C	Control Voltage Tuning Range; NOTE 4		0		V_{DD}	V

NOTE: Electrical parameters are guaranteed over the specified ambient operating temperature range, which is established when the device is mounted in a test socket with maintained transverse airflow greater than 500 lfpm. The device will meet specifications after thermal equilibrium has been reached under these conditions.
NOTE 1: V_C = 0V to V_{DD}.
NOTE 2: Nominal oscillator gain: Pull range divided by the control voltage tuning range of 3.3V.
E.g. for ADC_GAIN[6:0] = 00.0001 the pull range is ±12.5ppm, resulting in an oscillator gain of 2 * 12.5ppm ÷ 3.3V = 7.57ppm/V.
NOTE 3: For best phase noise performance, use the lowest K_V that meets the requirements of the application.
NOTE 4: BSL = Best Straight Line Fit: Variation of the output frequency vs. control voltage V_C, in percent. V_C ranges from 10% to 90% V_{DD}.
NOTE 5: Incremental slope is defined as the linearity in percent of the raw data (not relative to BSL) from 10% to 90% V_{DD}.

© 2019 Renesas Electronics Corporation

Table 6B. AC Characteristics, V_{DD} = 3.3V ±5% or 2.5V ±5%, T_A = -40°C to 85°C

Symbol	Parameter	Test Conditions	Minimum	Typical	Maximum	Units
f_{OUT}	Output Frequency Q, nQ	Output Divider, *N* = 3 to126	15.476		866.67	MHz
		Output Divider, *N* = 2	975		1,300	MHz
f_{VCO}	VCO Frequency		1980		2600	MHz
f_I	Initial Accuracy	Measured at 25°C			±10	ppm
f_S	Temperature Stability	Option code = A or B			±100	ppm
		Option code = E or F			±50	ppm
		Option code = K or L			±20	ppm
f_A	Aging	Frequency drift over 10 year life			±3	ppm
		Frequency drift over 15 year life			±5	ppm
f_T	Total Stability	Option code A or B (10 year life)			±113	ppm
		Option code E or F (10 year life)			±63	ppm
		Option code K or L (10 year life)			±33	ppm
t_{jit}(cc)	Cycle-to-Cycle Jitter; NOTE 1				20	ps
t_{jit}(per)	Period Jitter; NOTE 1			2.85	4	ps
t_{jit}(Ø)	RMS Phase Jitter (Random) Fractional PLL feedback and f_{XTAL}=114.285MHz (0xxx order codes)	17MHz ≤ f_{OUT} ≤ 1300MHz, NOTE 2,3,4		0.475	0.990	ps
		f_{OUT} = 156.25MHz, NOTE 2, 3, 4		0.494	0.757	ps
		f_{OUT} = 156.25MHz, NOTE 2, 3, 5		0.594		ps
Φ_N(100)	Single-side band phase noise, 100 Hz from Carrier	156.25MHz		-73.8		dBc/Hz
Φ_N(1k)	Single-side band phase noise, 1kHz from Carrier	156.25MHz		-99.8		dBc/Hz
Φ_N(10k)	Single-side band phase noise, 10kHz from Carrier	156.25MHz		-126.1		dBc/Hz
Φ_N(100k)	Single-side band phase noise, 100kHz from Carrier	156.25MHz		-129.3		dBc/Hz
Φ_N(1M)	Single-side band phase noise, 1MHz from Carrier	156.25MHz		-140.3		dBc/Hz
Φ_N(10M)	Single-side band phase noise, 10MHz from Carrier	156.25MHz		-144.3		dBc/Hz
PSNR	Power Supply Noise Rejection	50mV Sinusoidal Noise 1kHz - 50MHz		-54		db
t_R / t_F	Output Rise/Fall Time	20% to 80%	100		425	ps
odc	Output Duty Cycle		45		55	%
t_{OSC}	Oscillator Start-Up Time				20	ms
t_{SET}	Output Frequency Settling Time after FSEL0 and FSEL1 Values are Changed			470		µs

NOTE: Electrical parameters are guaranteed over the specified ambient operating temperature range, which is established when the device is mounted in a test socket with maintained transverse airflow greater than 500 lfpm. The device will meet specifications after thermal equilibrium has been reached under these conditions. All AC parameters are characterized with P=1 and pull range ±250 ppm.
NOTE: XTAL parameters (initial accuracy, temperature stability, aging and total stability) are guaranteed by manufacturing.
NOTE 1: This parameter is defined in accordance with JEDEC standard 65.
NOTE 2: Please refer to the phase noise plots.
NOTES continued on next page.

© 2019 Renesas Electronics Corporation

NOTE 3: Please see the FemtoClock NG Ceramic 5x7 Modules Programming guide for more information on finding the optimum configuration for phase noise.
NOTE 4: Integration range: 12kHz-20MHz.
NOTE 5: Integration range: 1kHz-40MHz.

Typical Phase Noise at 156.25MHz (12kHz - 20MHz)

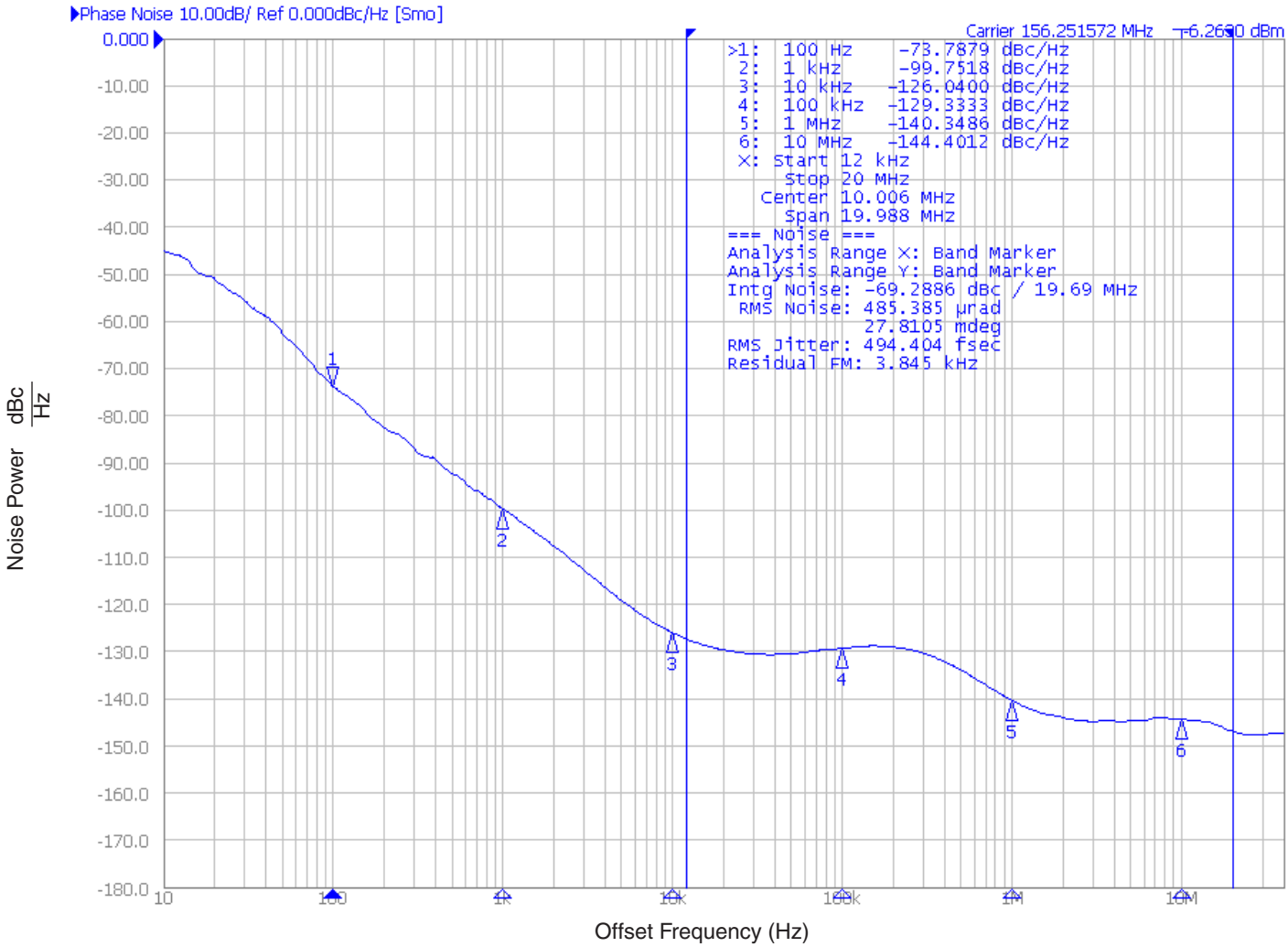

© 2019 Renesas Electronics Corporation

Parameter Measurement Information

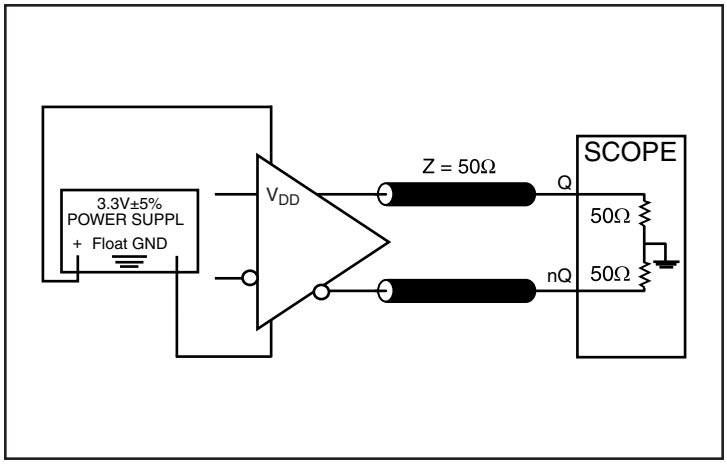

3.3V LVDS Output Load AC Test Circuit

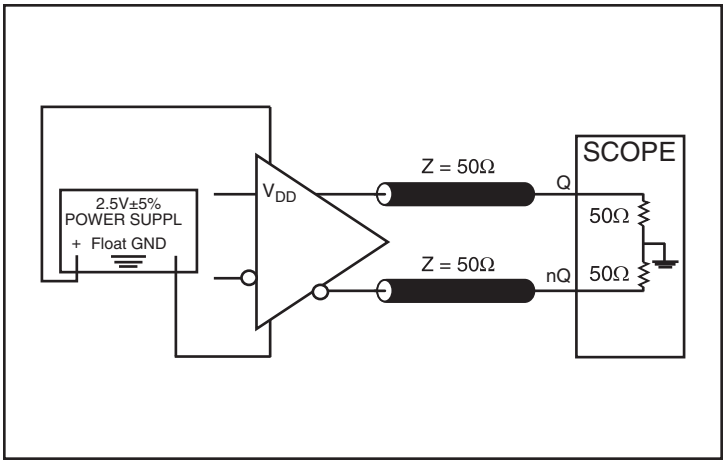

2.5V LVDS Output Load AC Test Circuit

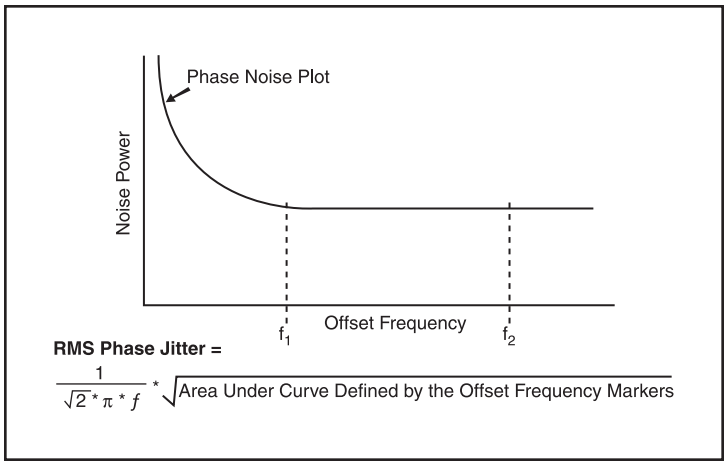

RMS Phase Jitter

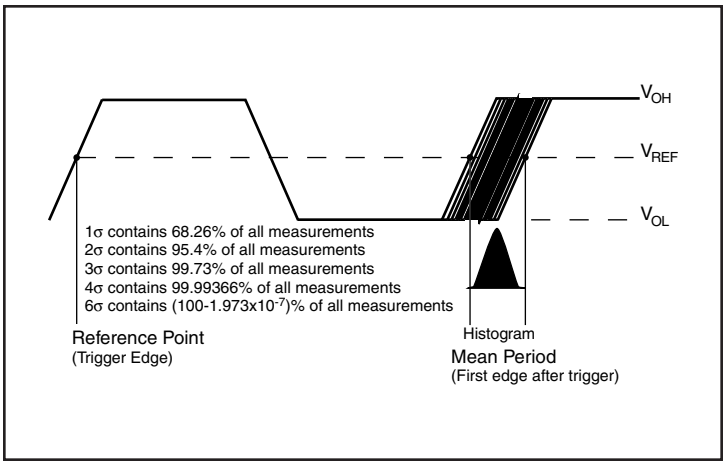

Period Jitter

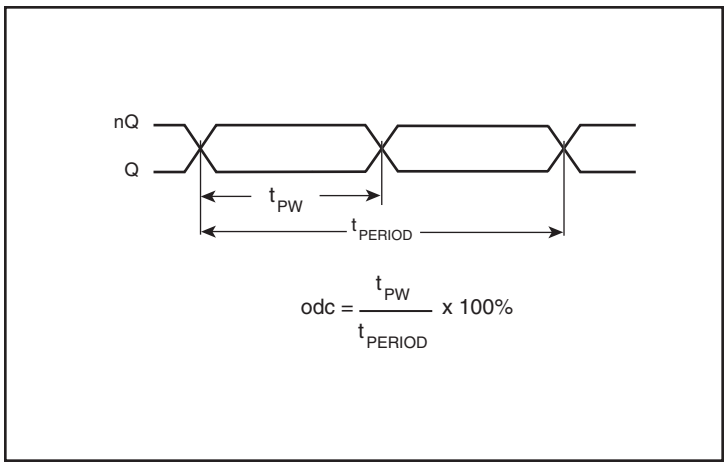

Output Duty Cycle/Pulse Width/Period

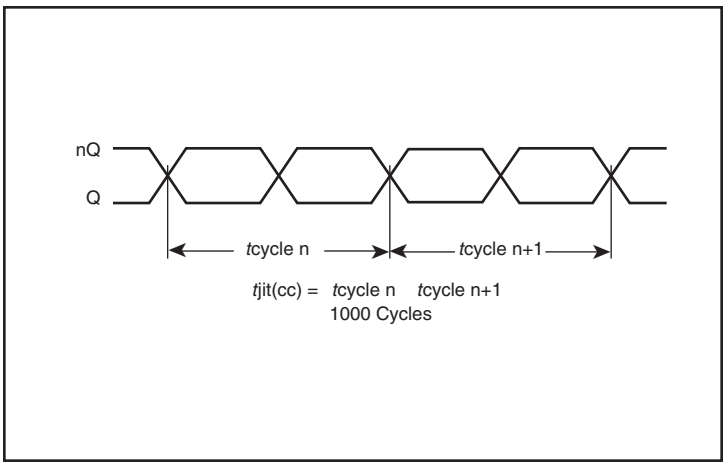

Cycle-to-Cycle Jitter

© 2019 Renesas Electronics Corporation

Parameter Measurement Information (continued)

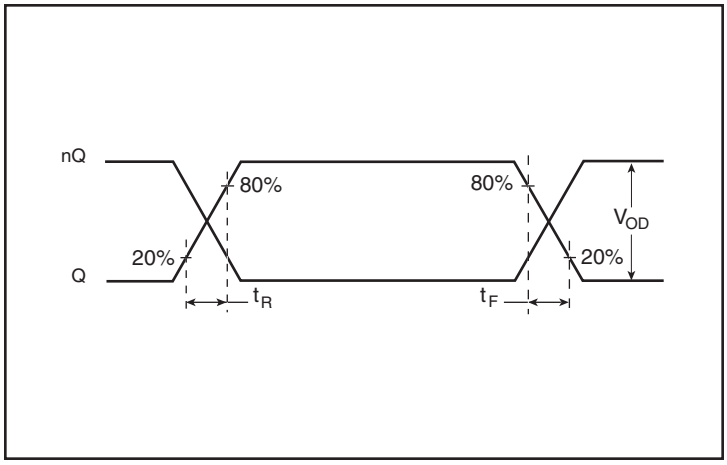

Output Rise/Fall Time

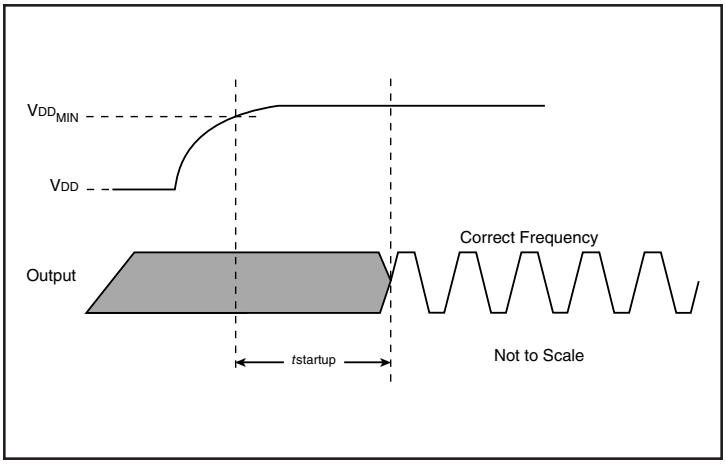

Start-Up

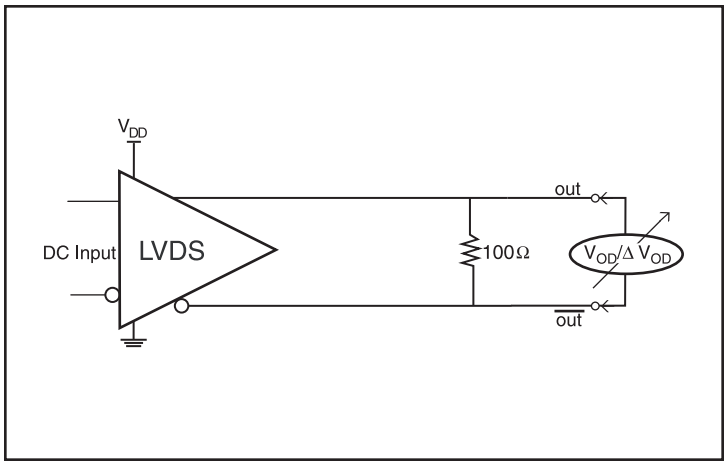

Differential Output Voltage Setup

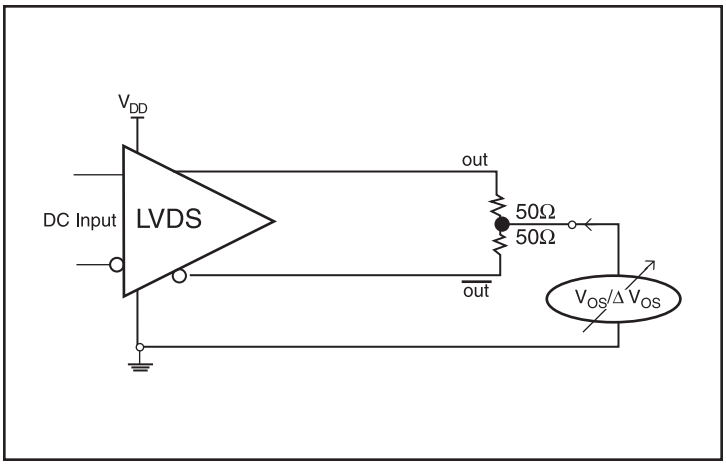

Offset Voltage Setup

© 2019 Renesas Electronics Corporation

Applications Information

Recommendations for Unused Input Pins

Inputs:

LVCMOS Select Pins

All control pins have internal pulldowns; additional resistance is not required but can be added for additional protection. A 1kΩ resistor can be used.

LVDS Driver Termination

For a general LVDS interface, the recommended value for the termination impedance (Z_T) is between 90Ω and 132Ω. The actual value should be selected to match the differential impedance (Z_0) of your transmission line. A typical point-to-point LVDS design uses a 100Ω parallel resistor at the receiver and a 100Ω differential transmission-line environment. In order to avoid any transmission-line reflection issues, the components should be surface mounted and must be placed as close to the receiver as possible. IDT offers a full line of LVDS compliant devices with two types of output structures: current source and voltage source. The standard termination schematic as shown in *Figure 1A* can be used with either type of output structure. *Figure 1B*, which can also be used with both output types, is an optional termination with center tap capacitance to help filter common mode noise. The capacitor value should be approximately 50pF. If using a non-standard termination, it is recommended to contact IDT and confirm if the output structure is current source or voltage source type. In addition, since these outputs are LVDS compatible, the input receiver's amplitude and common-mode input range should be verified for compatibility with the output.

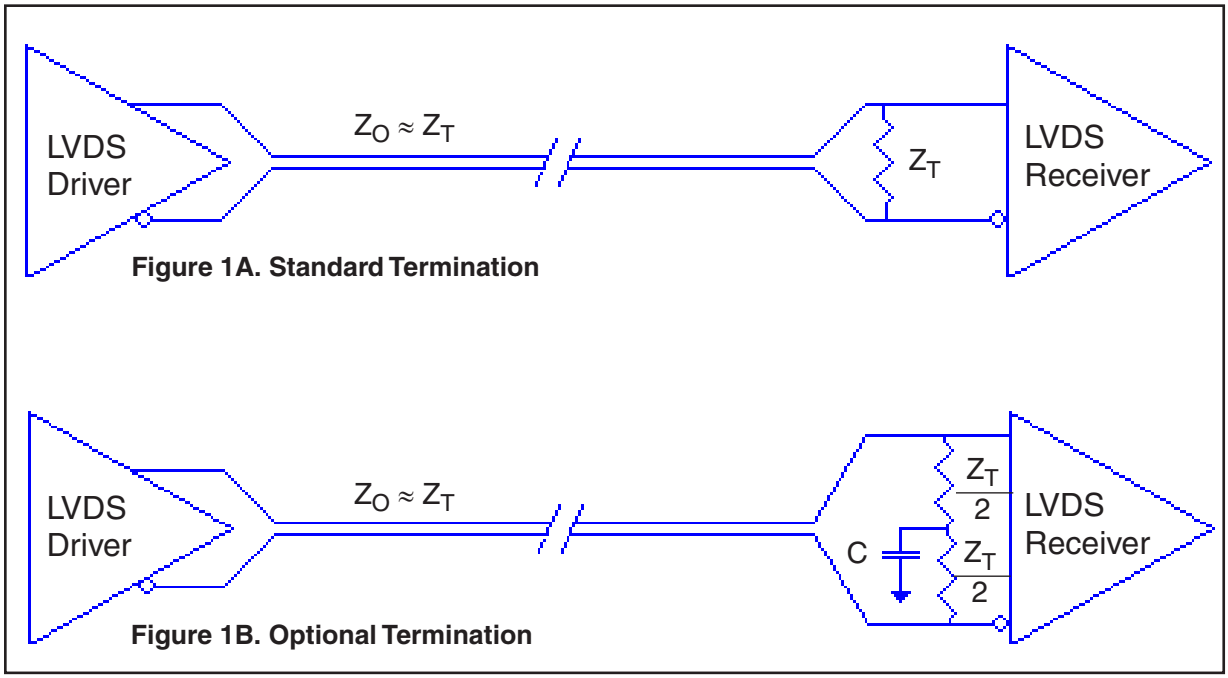

LVDS Termination

© 2019 Renesas Electronics Corporation

Power Considerations

This section provides information on power dissipation and junction temperature for the IDT8N4QV01.
Equations and example calculations are also provided.

1. Power Dissipation.

The total power dissipation for the IDT8N4QV01 is the sum of the core power plus the power dissipated in the load(s). The following is the power dissipation for V_{DD} = 3.3V + 5% = 3.465V, which gives worst case results.

- Power $(core)_{MAX} = V_{DD_MAX} * I_{DD_MAX}$ = 3.465V * 160mA = **554.4mW**

2. Junction Temperature.

Junction temperature, Tj, is the temperature at the junction of the bond wire and bond pad directly affects the reliability of the device. The maximum recommended junction temperature is 125°C. Limiting the internal transistor junction temperature, Tj, to 125°C ensures that the bond wire and bond pad temperature remains below 125°C.

The equation for Tj is as follows: $Tj = \theta_{JA} * Pd_total + T_A$

Tj = Junction Temperature

θ_{JA} = Junction-to-Ambient Thermal Resistance

Pd_total = Total Device Power Dissipation (example calculation is in section 1 above)

T_A = Ambient Temperature

In order to calculate junction temperature, the appropriate junction-to-ambient thermal resistance θ_{JA} must be used. Assuming no air flow and a multi-layer board, the appropriate value is 49.4°C/W per Table 7 below.

Therefore, Tj for an ambient temperature of 85°C with all outputs switching is:

85°C + 0.554W * 49.4°C/W = 112.4°C. This is below the limit of 125°C.

This calculation is only an example. Tj will obviously vary depending on the number of loaded outputs, supply voltage, air flow and the type of board (multi-layer).

Table 7. Thermal Resistance θ_{JA} for 10 Lead Ceramic 5mm x 7mm Package, Forced Convection

θ_{JA} **by Velocity**			
Meters per Second	**0**	**1**	**2.5**
Multi-Layer PCB, JEDEC Standard Test Boards	49.4°C/W	44.2°C/W	41°C/W

© 2019 Renesas Electronics Corporation

Reliability Information

Table 8. θ_{JA} vs. Air Flow Table for a 10-lead Ceramic 5mm x 7mm Package

θ_{JA} vs. Air Flow			
Meters per Second	**0**	**1**	**2.5**
Multi-Layer PCB, JEDEC Standard Test Boards	49.4°C/W	44.2°C/W	41°C/W

Transistor Count

The transistor count for IDT8N4QV01 is: 47,372

© 2019 Renesas Electronics Corporation

Package Outline and Package Dimensions

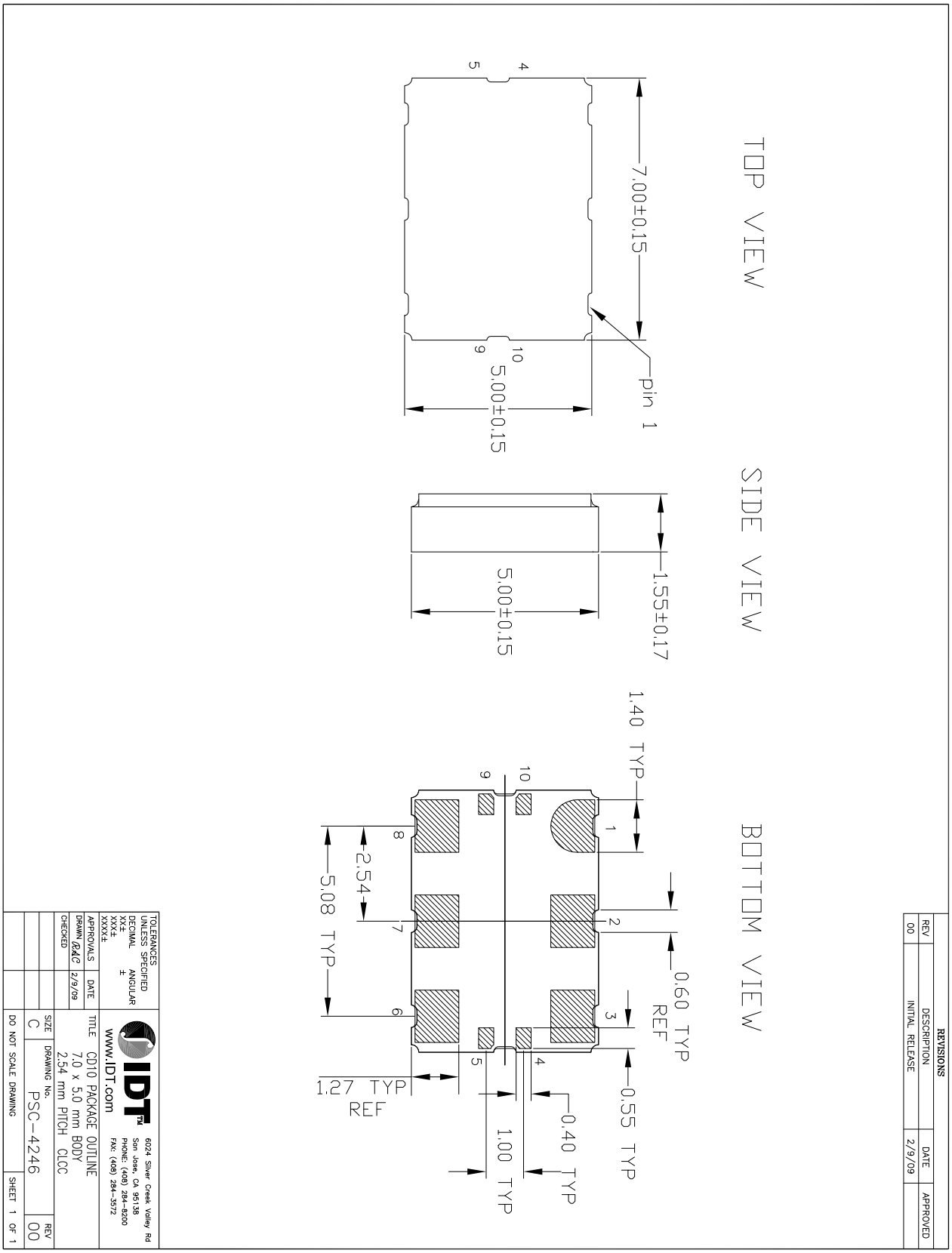

© 2019 Renesas Electronics Corporation

Ordering Information for FemtoClock NG Ceramic-Package XO and VCXO Products

The programmable VCXO and XO devices support a variety of devices options such as the output type, number of default frequencies, internal crystal frequency, power supply voltage, ambient temperature range and the frequency accuracy. The device options, default frequencies and default VCXO pull range must be specified at the time of order and are programmed by IDT before the shipment. The table below specifies the available order codes, including the device options and default frequency configurations. Example part number: the order code 8N3QV01FG-0001CDI specifies a programmable, quad default-frequency VCXO with a voltage supply of 2.5V, a LVPECL output, a ±50 ppm crystal frequency accuracy, contains a 114.285MHz internal crystal as frequency source, industrial temperature range, a lead-free (6/6 RoHS) 10-lead ceramic 5mm x 7mm x 1.55mm package and is factory-programmed to the default frequencies of 100, 122.88, 125 and 156.25MHz and to the VCXO pull range of min. ±100 ppm.

Other default frequencies and order codes are available from IDT on request. For more information on available default frequencies, see the *FemtoClock NG Ceramic-Package XO and VCXO Ordering Product Information* document.

Part/Order Number

8N X X XXX X X - dddd XX X X

FemtoClock NG

I/O Identifier
0: LVCMOS
3: LVPECL
4: LVDS

Number of Default Frequencies
S: 1: Single
D: 2: Dual
Q: 4: Quad

Part Number

	Function	#pins	OE fct. at pin
001	XO	10	OE@2
003	XO	10	OE@1
V01	VCXO	10	OE@2
V03	VCXO	10	OE@1
V75	VCXO	6	OE@2
V76	VCXO	6	nOE@2
V85	VCXO	6	—
085	XO	6	OE@1
270	XO	6	OE@1
271	XO	6	OE@2
272	XO	6	nOE@2
273	XO	6	nOE@1

Shipping Package
8: Tape & Reel
(no letter): Tray

Ambient Temperature Range
"**I**": Industrial: (T_A = -40°C to 85°C)
(no letter) : (T_A = 0°C to 70°C)

Package Code
CD: Lead-Free, 6/10-lead ceramic 5mm x 7mm x 1.55mm

Default-Frequency and VCXO Pull Range
See document *FemtoClock NG Ceramic-Package XO and VCXO Ordering Product Information.*

dddd	f_{XTAL} (MHz)	PLL feedback	Use for
0000 to **0999**	114.285	Fractional	VCXO, XO
1000 to **1999**	100.000	Integer	XO
2000 to **2999**		Fractional	XO

Last digit = **L**: configuration pre-programmed and not changeable

Die Revision
G (opt. 207)

Option Code (Supply Voltage and Frequency-Stability)
A: V_{CC} = 3.3V±5%, ±100ppm
B: V_{CC} = 2.5V±5%, ±100ppm
E: V_{CC} = 3.3V±5%, ±50ppm
F: V_{CC} = 2.5V±5%, ±50ppm
K: V_{CC} = 3.3V±5%, ±20ppm
L: V_{CC} = 2.5V±5%, ±20ppm

© 2019 Renesas Electronics Corporation

Table 9. Device Marking

Marking	Industrial Temperature Range (T_A = -40°C to 85°C)	Commercial Temperature Range (T_A = 0°C to 70°C)
	IDT8N4**x**V01**y**G- **dddd**CDI	IDT8N4**x**V01**y**G- **dddd**CD
	x = Number of Default Frequencies, **y** = Option Code, **dddd**=Default-Frequency and VCXO Pull Range	

© 2019 Renesas Electronics Corporation

Revision History Sheet

Rev	Table	Page	Description of Change	Date
A	T9	18	Table 9 Device Marking, corrected marking.	3/6/12
A	T1 T6A	2 8	Deleted “(see table 3C)” from the first table row, description column. NOTE 2; Deleted “from table 3C”.	3/13/14

© 2019 Renesas Electronics Corporation

Notice

1. Descriptions of circuits, software and other related information in this document are provided only to illustrate the operation of semiconductor products and application examples. You are fully responsible for the incorporation or any other use of the circuits, software, and information in the design of your product or system. Renesas Electronics disclaims any and all liability for any losses and damages incurred by you or third parties arising from the use of these circuits, software, or information.
2. Renesas Electronics hereby expressly disclaims any warranties against and liability for infringement or any other claims involving patents, copyrights, or other intellectual property rights of third parties, by or arising from the use of Renesas Electronics products or technical information described in this document, including but not limited to, the product data, drawings, charts, programs, algorithms, and application examples.
3. No license, express, implied or otherwise, is granted hereby under any patents, copyrights or other intellectual property rights of Renesas Electronics or others.
4. You shall not alter, modify, copy, or reverse engineer any Renesas Electronics product, whether in whole or in part. Renesas Electronics disclaims any and all liability for any losses or damages incurred by you or third parties arising from such alteration, modification, copying or reverse engineering.
5. Renesas Electronics products are classified according to the following two quality grades: "Standard" and "High Quality". The intended applications for each Renesas Electronics product depends on the product's quality grade, as indicated below.
   "Standard": Computers; office equipment; communications equipment; test and measurement equipment; audio and visual equipment; home electronic appliances; machine tools; personal electronic equipment; industrial robots; etc.
   "High Quality": Transportation equipment (automobiles, trains, ships, etc.); traffic control (traffic lights); large-scale communication equipment; key financial terminal systems; safety control equipment; etc.
   Unless expressly designated as a high reliability product or a product for harsh environments in a Renesas Electronics data sheet or other Renesas Electronics document, Renesas Electronics products are not intended or authorized for use in products or systems that may pose a direct threat to human life or bodily injury (artificial life support devices or systems; surgical implantations; etc.), or may cause serious property damage (space system; undersea repeaters; nuclear power control systems; aircraft control systems; key plant systems; military equipment; etc.). Renesas Electronics disclaims any and all liability for any damages or losses incurred by you or any third parties arising from the use of any Renesas Electronics product that is inconsistent with any Renesas Electronics data sheet, user's manual or other Renesas Electronics document.
6. When using Renesas Electronics products, refer to the latest product information (data sheets, user's manuals, application notes, "General Notes for Handling and Using Semiconductor Devices" in the reliability handbook, etc.), and ensure that usage conditions are within the ranges specified by Renesas Electronics with respect to maximum ratings, operating power supply voltage range, heat dissipation characteristics, installation, etc. Renesas Electronics disclaims any and all liability for any malfunctions, failure or accident arising out of the use of Renesas Electronics products outside of such specified ranges.
7. Although Renesas Electronics endeavors to improve the quality and reliability of Renesas Electronics products, semiconductor products have specific characteristics, such as the occurrence of failure at a certain rate and malfunctions under certain use conditions. Unless designated as a high reliability product or a product for harsh environments in a Renesas Electronics data sheet or other Renesas Electronics document, Renesas Electronics products are not subject to radiation resistance design. You are responsible for implementing safety measures to guard against the possibility of bodily injury, injury or damage caused by fire, and/or danger to the public in the event of a failure or malfunction of Renesas Electronics products, such as safety design for hardware and software, including but not limited to redundancy, fire control and malfunction prevention, appropriate treatment for aging degradation or any other appropriate measures. Because the evaluation of microcomputer software alone is very difficult and impractical, you are responsible for evaluating the safety of the final products or systems manufactured by you.
8. Please contact a Renesas Electronics sales office for details as to environmental matters such as the environmental compatibility of each Renesas Electronics product. You are responsible for carefully and sufficiently investigating applicable laws and regulations that regulate the inclusion or use of controlled substances, including without limitation, the EU RoHS Directive, and using Renesas Electronics products in compliance with all these applicable laws and regulations. Renesas Electronics disclaims any and all liability for damages or losses occurring as a result of your noncompliance with applicable laws and regulations.
9. Renesas Electronics products and technologies shall not be used for or incorporated into any products or systems whose manufacture, use, or sale is prohibited under any applicable domestic or foreign laws or regulations. You shall comply with any applicable export control laws and regulations promulgated and administered by the governments of any countries asserting jurisdiction over the parties or transactions.
10. It is the responsibility of the buyer or distributor of Renesas Electronics products, or any other party who distributes, disposes of, or otherwise sells or transfers the product to a third party, to notify such third party in advance of the contents and conditions set forth in this document.
11. This document shall not be reprinted, reproduced or duplicated in any form, in whole or in part, without prior written consent of Renesas Electronics.
12. Please contact a Renesas Electronics sales office if you have any questions regarding the information contained in this document or Renesas Electronics products.

(Note1) "Renesas Electronics" as used in this document means Renesas Electronics Corporation and also includes its directly or indirectly controlled subsidiaries.
(Note2) "Renesas Electronics product(s)" means any product developed or manufactured by or for Renesas Electronics.

(Rev.4.0-1 November 2017)

Corporate Headquarters

TOYOSU FORESIA, 3-2-24 Toyosu,
Koto-ku, Tokyo 135-0061, Japan
www.renesas.com

Contact Information

For further information on a product, technology, the most up-to-date version of a document, or your nearest sales office, please visit:
www.renesas.com/contact/

Trademarks

Renesas and the Renesas logo are trademarks of Renesas Electronics Corporation. All trademarks and registered trademarks are the property of their respective owners.

© 2020 Renesas Electronics Corporation. All rights reserved.