samtec

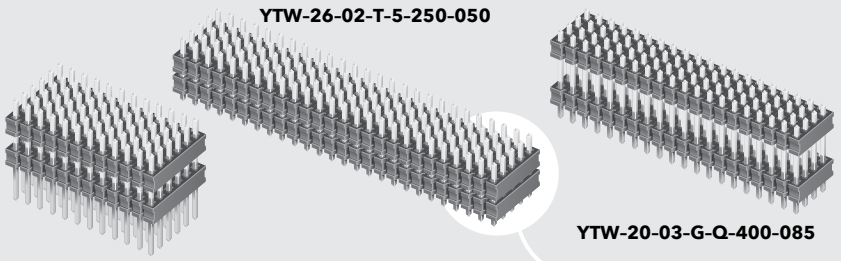

(2.00 mm) .0787"

YTW SERIES

HIGH-DENSITY BOARD STACKER

SPECIFICATIONS

For complete specifications see www.samtec.com?YTW

Insulator Material:
Black Liquid Crystal Polymer
Terminal Material:
Phosphor Bronze
Operating Temp Range:
-55 °C to +105 °C with Tin;
-55 °C to +125 °C with Gold
Plating:
Sn or Au over
50 µ" (1.27 µm) Ni
RoHS Compliant:
Yes
Lead-Free Solderable:
Wave only

RECOGNITIONS

For complete scope of recognitions see www.samtec.com/quality

FILE NO. E111594

Mates with:
YTQ, YTS, YTE

OTHER SOLUTIONS

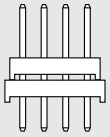

Paste In Hole (PIH) processing. Contact Samtec ASP Group.

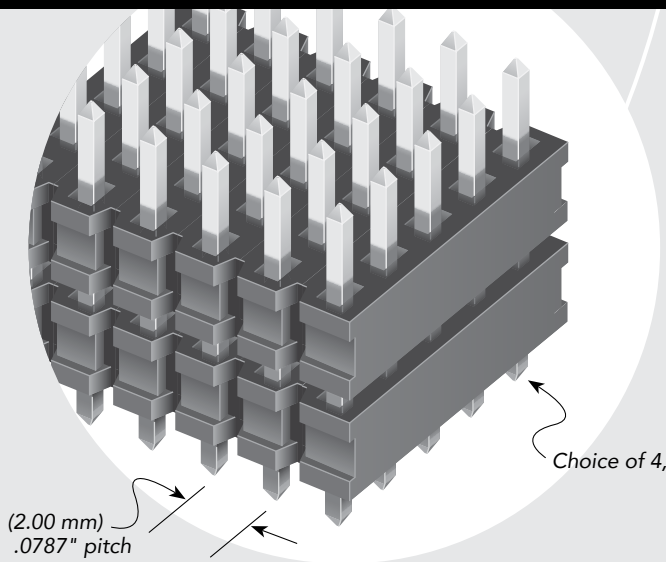

YTW – NO. PINS PER ROW – LEAD STYLE – PLATING OPTION – ROW OPTION – STACKER HEIGHT – TAIL SPEC

02 thru 50

Specify LEAD STYLE from chart below.

–G
= 20 µ" (0.51 µm) Gold contact area, Gold flash on tail

–S
= 30 µ" (0.76 µm) Gold contact area, Tin on tail (Style -01 & -02 not available)

–L
= 10 µ" (0.25 µm) Gold contact area, Tin on tail

–T
= Tin

–Q
= Four Row

–5
= Five Row

–6
= Six Row

–"XXX"
= Stacker Height In inches (0.13 mm) .005" increments

Example: -250 = (6.35 mm) .250"

–"XXX"
= Tail Length In inches (0.13 mm) .005" increments

Example: -150 = (3.81 mm) .150"

–"XXX"
= Polarized Position

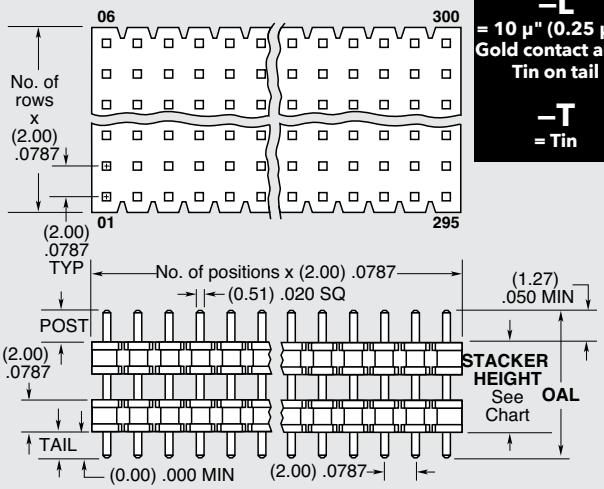

LEAD STYLE	OAL
–01	(8.20) .323
–02	(9.60) .377
–03	(13.60) .535
–04	(14.10) .555
–05	(15.10) .594
–06	(17.10) .673
–07	(19.10) .751
–09	(11.60) .456
–10	(15.60) .614
–11	(10.08) .397

ROW OPTION	STACKER HEIGHT
-Q	(3.05) .120 MIN
-5 & -6	(4.06) .160 MIN

Note:
This Series is non-standard, non-returnable.

Unless otherwise approved in writing by Samtec, all parts and components are designed and built according to Samtec's specifications which are subject to change without notice.