SOUTHCO	NO. 12 TOOLHEAD SCREWS 200 TO 600 LENGTHS	DATE	DRAWN	CHKD	SCALE	DRAWING NUMBER
		12-9-87	JHV		NTS	J-12-T-1

REV.	DATE	BY-CHKD	REVISIONS
A	/24/89	JHV	DWG WAS NJ-12-29-11-1; REDRAWN ON CAD
B	03 FEB 93	MPF	PRN: S-99-1-D
C	07NOV96	JGK	PRN: S-1-06A

MATERIAL - CARBON STEEL

HEAT TREAT - CASE HARDENED

FINISH - ZINC PLATE,CHROMATE PLUS SEALER.

PART NO.	"A"	"B"	"C"
12-T-102	.100	.328	.486
12-T-103	.150		
12-T-202	.100	.453	.611
12-T-203	.150		
12-T-204	.200		
12-T-205	.250		
12-T-302	.100	.578	.736
12-T-303	.150		
12-T-304	.200		
12-T-305	.250		
12-T-307	.350		
12-T-402	.100	.703	.861
12-T-403	.150		
12-T-404	.200		
12-T-405	.250		
12-T-407	.350		
12-T-409	.450		
12-T-502	.100	.828	.986
12-T-503	.150		
12-T-504	.200		
12-T-505	.250		
12-T-507	.350		
12-T-509	.450		
12-T-511	.550		
12-T-602	.100	.953	1.111
12-T-603	.150		
12-T-604	.200		
12-T-605	.250		
12-T-607	.350		
12-T-609	.450		
12-T-611	.550		
12-T-613	.650		
12-T-615	.750		

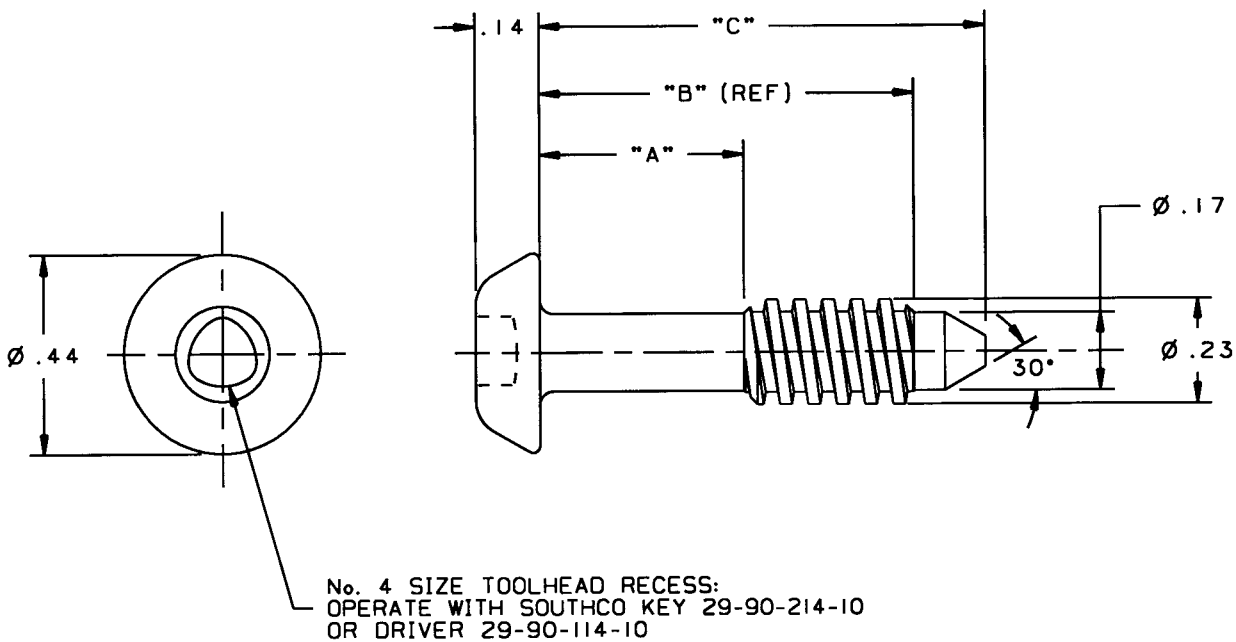

FORMATA 3/88

PROPRIETARY ITEM - EXCEPT FOR USES EXPRESSLY GRANTED IN WRITING INFORMATION DISCLOSED HEREON IS CONFIDENTIAL AND ALL RIGHTS PATENT AND OTHERWISE ARE RESERVED BY SOUTHCO, INC.

PAT. PENDING

ALL DIMENSIONS WITHOUT TOLERANCES ARE REFERENCE.
DIMENSIONS IN INCHES.
THIRD ANGLE PROJECTION

DRAWING NUMBER J-12-T-1