THIS DRAWING IS UNPUBLISHED. RELEASED FOR PUBLICATION – ,– .
© COPYRIGHT – By – ALL RIGHTS RESERVED.

REVISIONS

P	LTR	DESCRIPTION	DATE	DWN	APVD
	B1	REVISED PER ECO–20–001620	22FEB2020	RZ	RS

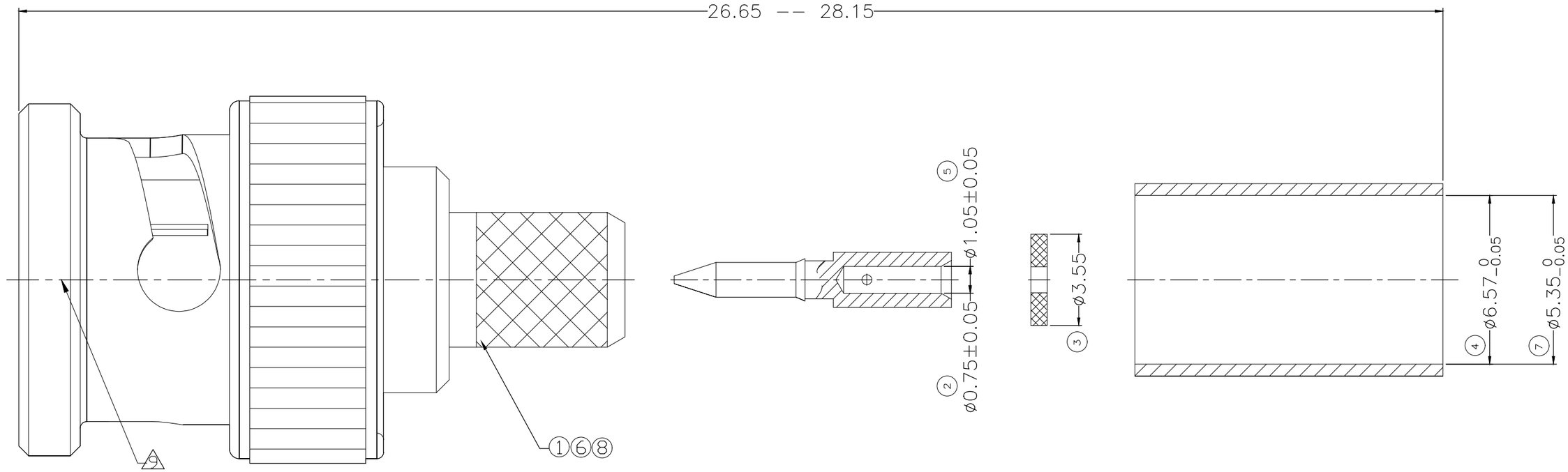

1. COAX CONNECTOR COMPLIES WITH SPEC. CECC 22120

2. COAX PLUG (POS. 1,6,8) ASSEMBLED WITH MALE CONTACT (POS. 2,5), WITH SPACER (POS. 3) AND CRIMPFERRULE (POS. 4,7) PACKED IN PLASTIC BAG

3. NICKEL PL. PER AMP SPEC. 112–25–2, 2.0um MIN – 4.0um MAX. THK

4. 0.1–0.2um Au OVER NOM. 4.0um Ni P PLATING

5. OHTER CABLETYPS ON REQUEST

6. HAND CRAMPING TOOL PROFESSIONAL AMP PN 734320–1 ODER STANDARD AMP PN 947488–1

7. USE SPACER POS. 3 ONLY IN CASE OF RG62 CONNECTION

8. BULK PACKAGE PER 100 PCS

9. AMP LOGO

STRIPPING DIMENSIONS

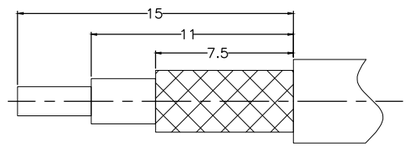

OBSOLETE

5–4 [8]	5–3 [8]	5–2 [7,8]	5–1 [7,8]	1–2 [7]	1–1 [7,7]	–4 [7]	–1 [7,7]	MATERIAL	DESCRIPTION	ITEM NO
–	1	–	–	1	–	–	–	CuZn [3]	PLUG	8
–	1	–	–	1	–	–	–	SFCu [3]	CRIMPFERRULE	7
–	–	1	–	–	1	–	–	CuZn [3]	PLUG	6
1	1	–	–	1	–	1	–	CuZn [4]	MALE CONTACT	5
1	–	1	1	–	1	1	1	SFCu [3]	CRIMPFERRULE	4
–	–	1	1	–	1	–	1	PA	SPACER	3
–	–	1	1	–	1	–	1	CuZn [4]	MALE CONTACT	2
1	–	–	1	–	–	1	1	ZnALCu [3]	PLUG	1

THIS DRAWING IS A CONTROLLED DOCUMENT.

DIMENSIONS: mm

TOLERANCES UNLESS OTHERWISE SPECIFIED:
0 PLC ± –
1 PLC ± –
2 PLC ± 0.15
3 PLC ± –
4 PLC ± –
ANGLES ± –

MATERIAL

FINISH

DWN G. HOLAUS 06.09.90
CHK H.J.ZANDER 07.01.92
APVD
PRODUCT SPEC —
APPLICATION SPEC —
WEIGHT —

TE Connectivity

NAME
BNC PLUG FOR SINGLE BRAID FLEX CRIMP
RG59, RG62

SIZE	CAGE CODE	DRAWING NO	RESTRICTED TO
A3	00779	C–134959	—

CUSTOMER DRAWING

SCALE	SHEET	REV
6:1	1 OF 1	B1