THIS DRAWING IS UNPUBLISHED. RELEASED FOR PUBLICATION MAR , 1991.
© COPYRIGHT 1991 BY TYCO ELECTRONICS CORPORATION. ALL RIGHTS RESERVED.

LOC	DIST
J	

REVISIONS

P	LTR	DESCRIPTION	DATE	DWN	APVD
	D	REVISED ECR-08-022162	03SEP08	A.Z	S.Y

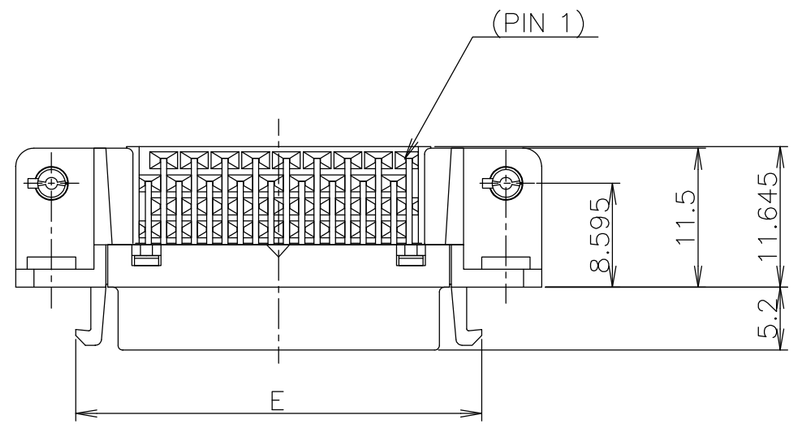

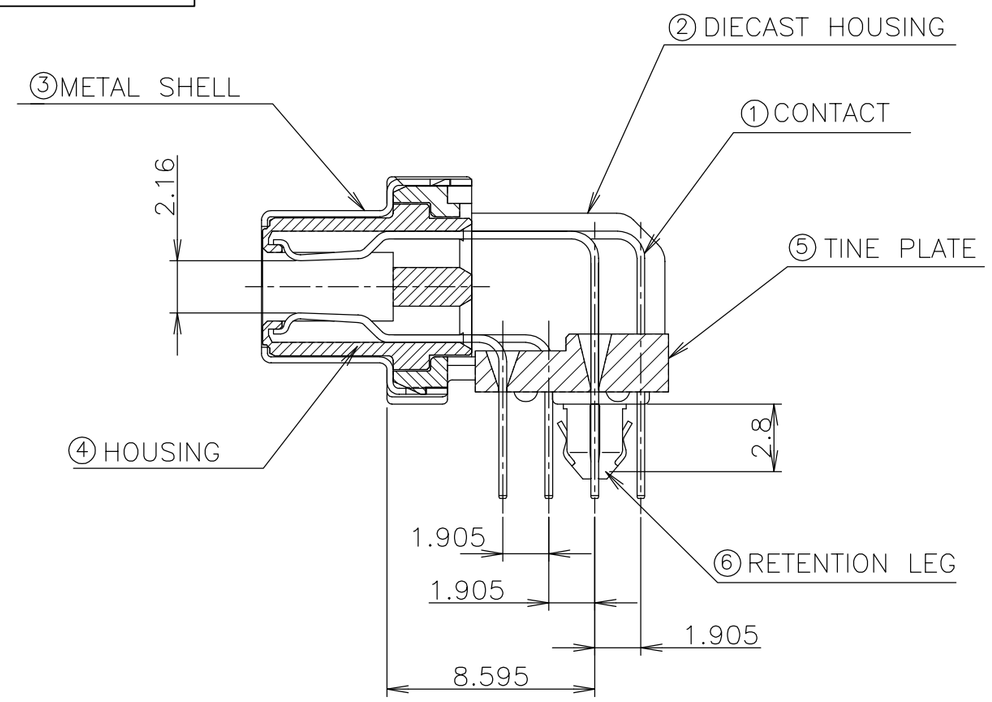

ITEM	MATERIAL	FINISH
①	COPPER ALLOY	NICKEL UNDER PLATE ALL OVER CONTACT AREA ; Au(0.3u,0.76u) SOLDER TINE AREA ; TIN-LEAD PLATE
②	ZINC	NICKEL PLATING
③	STEEL t0.25	NICKEL PLATE OVER COPPER UNDERPLATE
④ ⑤	THERMO-PLASTIC	COLOR; BLACK
⑥	COPPER ALLOY	TIN-LEAD PLATE OVER NICKEL UNDERPLATE

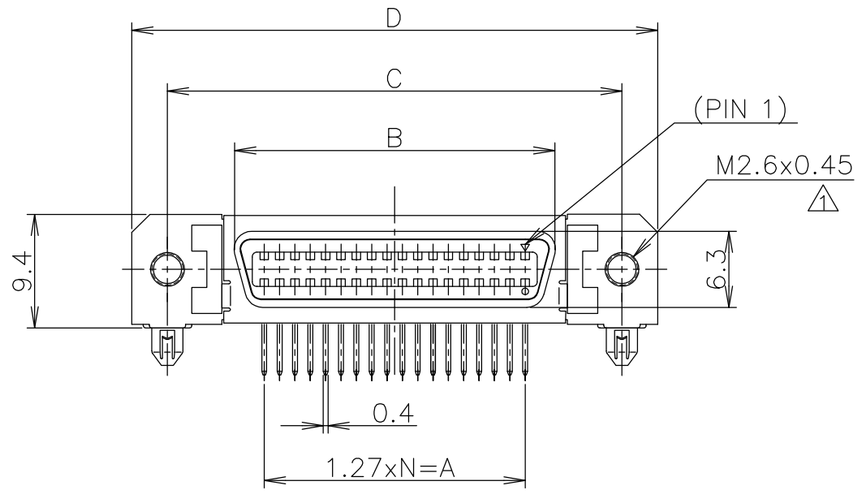

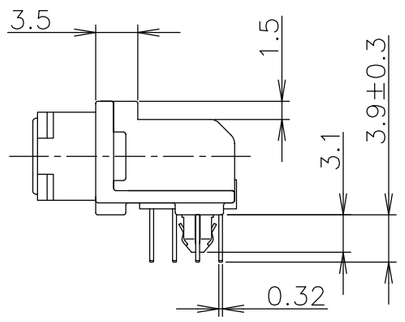

NOTES:

1. RECOMMENDED SCREW SIZE ; M2.6 PANHEAD SCREW(L=5)
2. RECOMMENDED P.C BOARD THICKNESS ; 2.4mm (REF)
3. CONNECTOR TO BE MATED; 175677
4. INSERTION FORCE OF RETENTION LEG TO P.C.B; 2.2kg MAX/CONNECTOR.
5. RETENTIVITY OF RETENTION LEG TO P.C.B; 0.5kg MIN/CONNECTOR.

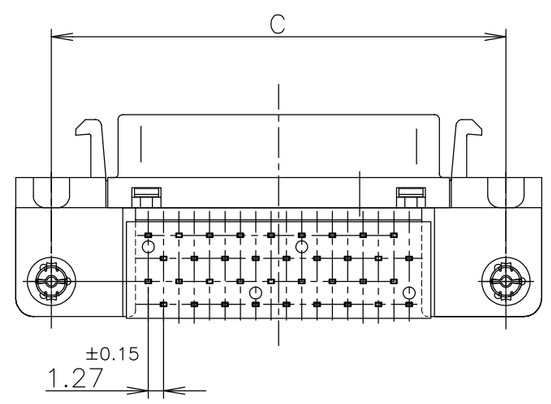

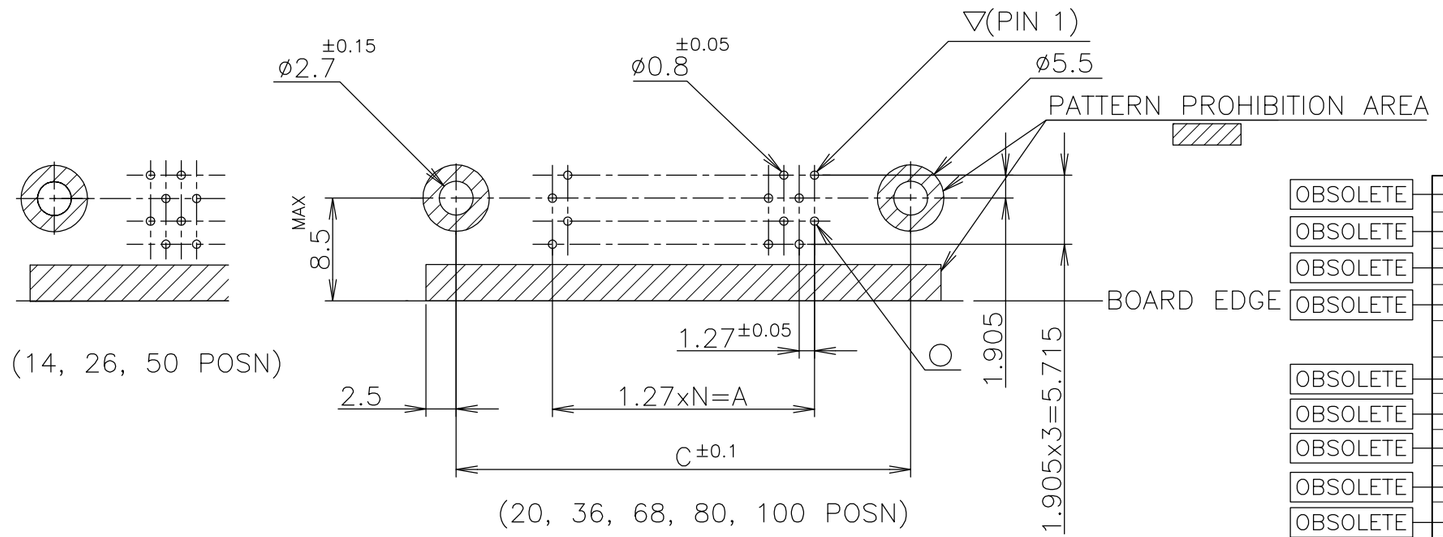

RECOMMENDED PC BOARD
MOUNTING DIMMENSION
(COMPONENT SIDE)

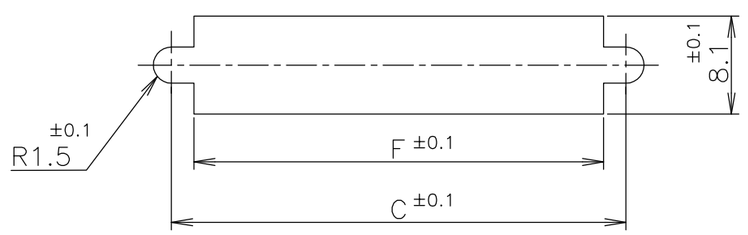

RECOMENDED PANEL CUTOUT
THK,2mm MAX

	N	F	E	D	C	B	A	Au PLT.	POSITION	PART NO.
OBSOLETE	~~39~~	~~61.9~~	~~61.55~~	~~71.45~~	~~65.55~~	~~54.53~~	~~49.53~~	~~0.76u~~	~~80~~	~~3-178239-0~~
OBSOLETE	~~49~~	~~74.6~~	~~74.25~~	~~84.15~~	~~78.25~~	~~67.23~~	~~62.23~~	~~0.76u~~	~~100~~	~~2-178239-9~~
OBSOLETE	~~33~~	~~54.2~~	~~53.93~~	~~63.83~~	~~57.93~~	~~46.91~~	~~41.91~~	~~0.76u~~	~~68~~	~~2-178239-8~~
OBSOLETE	~~24~~	~~42.8~~	~~42.50~~	~~52.40~~	~~46.50~~	~~35.48~~	~~30.48~~	~~0.76u~~	~~50~~	~~2-178239-7~~
	17	33.9	33.61	43.51	37.61	26.59	21.59	0.76u	36	2-178239-5
OBSOLETE	~~12~~	~~27.6~~	~~27.26~~	~~37.16~~	~~31.26~~	~~20.24~~	~~15.24~~	~~0.76u~~	~~26~~	~~2-178239-4~~
OBSOLETE	~~9~~	~~23.8~~	~~23.45~~	~~33.35~~	~~27.45~~	~~16.43~~	~~11.43~~	~~0.76u~~	~~20~~	~~2-178239-2~~
OBSOLETE	~~6~~	~~19.9~~	~~19.64~~	~~29.54~~	~~23.64~~	~~12.62~~	~~7.62~~	~~0.76u~~	~~14~~	~~2-178239-1~~
OBSOLETE	~~39~~	~~61.9~~	~~61.55~~	~~71.45~~	~~65.55~~	~~54.53~~	~~49.53~~	~~0.3u~~	~~80~~	~~1-178239-0~~
OBSOLETE	~~49~~	~~74.6~~	~~74.25~~	~~84.15~~	~~78.25~~	~~67.23~~	~~62.23~~	~~0.3u~~	~~100~~	~~178239-9~~
OBSOLETE	~~33~~	~~54.2~~	~~53.93~~	~~63.83~~	~~57.93~~	~~46.91~~	~~41.91~~	~~0.3u~~	~~68~~	~~178239-8~~
OBSOLETE	~~24~~	~~42.8~~	~~42.50~~	~~52.40~~	~~46.50~~	~~35.48~~	~~30.48~~	~~0.3u~~	~~50~~	~~178239-7~~
	17	33.9	33.61	43.51	37.61	26.59	21.59	0.3u	36	178239-5
OBSOLETE	~~12~~	~~27.6~~	~~27.26~~	~~37.16~~	~~31.26~~	~~20.24~~	~~15.24~~	~~0.3u~~	~~26~~	~~178239-4~~
OBSOLETE	~~9~~	~~23.8~~	~~23.45~~	~~33.35~~	~~27.45~~	~~16.43~~	~~11.43~~	~~0.3u~~	~~20~~	~~178239-2~~
	6	19.9	19.64	29.54	23.64	12.62	7.62	0.3u	14	178239-1

THIS DRAWING IS A CONTROLLED DOCUMENT.

DIMENSIONS: mm

TOLERANCES UNLESS OTHERWISE SPECIFIED:
0 PLC ±
1 PLC ±
2 PLC ±
3 PLC ±
4 PLC ±
ANGLES ±

TOLERANCES UNLESS OTHERWISE SPECIFIED:
10≥* : ±0.2
30≥*>10 : ±0.25
100≥*>30 : ±0.3
ANGEL : ±3°

MATERIAL: SEE TABLE
FINISH: SEE TABLE

DWN H.KODAMA 22MAR91
CHK Y.FUJIURA 01APR91
APVD Y.FUJIURA 01APR91
PRODUCT SPEC
APPLICATION SPEC
WEIGHT

Tyco Electronics
Tyco Electronics AMP K.K.
Kawasaki, Japan

NAME
RECEPTACLE HDR ASSY (3.9mm)
RETENTION LEG TYPE
STANDARD CHAMP.050 SERIES (II)

SIZE A2 | CAGE CODE 00779 | DRAWING NO C-178239 | RESTRICTED TO

CUSTOMER DRAWING | SCALE 2:1 | SHEET 1 OF 1 | REV D

178239