THIS DRAWING IS UNPUBLISHED. RELEASED FOR PUBLICATION -,- .
© COPYRIGHT - By - ALL RIGHTS RESERVED.

REVISIONS

P	LTR	DESCRIPTION	DATE	DWN	APVD
	D3	REVISED PER ECO-15-007953	28MAY2015	NK	DR
	D4	REVISED PER ECO-17-007400	23NOV2017	RS	DR

AMP WIRE RANGE	E13288 Listed	LR7189 Certified
16-14 AWG SOLID OR STRANDED	16-14 AWG SOLID OR STRANDED	16-14 AWG SOLID OR STRANDED

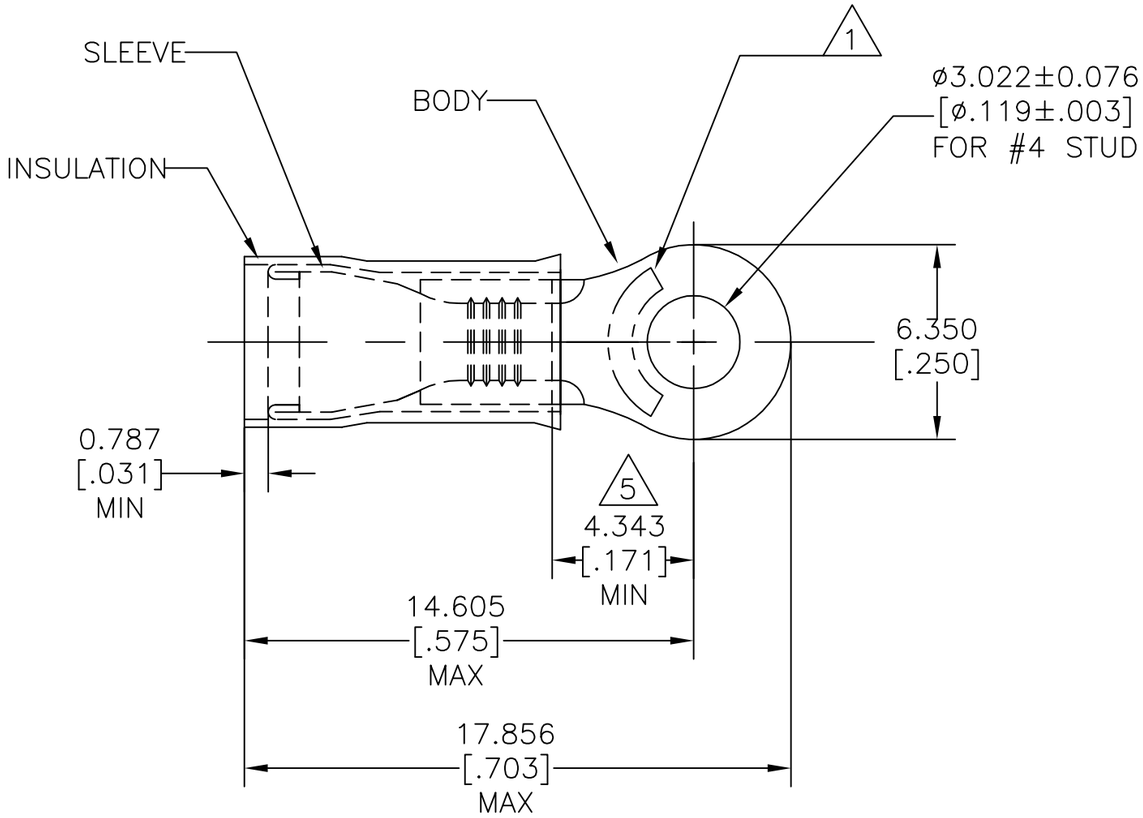

1. STAMP AMP 16-14* APPROX AS SHOWN.
2. WIRE INSULATION ø2.667-3.810[ø.105-.150]
3. BODY MATERIAL THK: 0.787±0.051[.031±.002]
4. MATERIAL:
   BODY & SLEEVE: CU PER ASTM B152
   INSULATION: NYLON PER ASTM D4066
5. APPLIES FROM EDGE OF METAL WIRE BARREL TO CENTER OF STUD HOLE.
6. MEETS MS25036-152, CLASS 1 & 2.
7. FINISH:
   BODY & SLEEVE: TIN PLATE 0.00254[.000100] MIN EXT THK PER ASTM B545
   INSULATION: COLOR - BLUE.

QTY	PACKAGE TYPE	PART NO
5000	TAPE & REEL	2-324159-2
1000	LOOSE PIECE	(6) 324159

CUSTOMER SERVICE SYSTEMS

FOR ADDITIONAL PRODUCT INFORMATION OR COPIES OF DRAWINGS AND TECHNICAL DOCUMENTS	PRODUCT INFORMATION CENTER 1-800-522-6752
FOR APPLICATION TOOLING INFORMATION	TOOLING ASSISTANCE CENTER 1-800-722-1111
FOR ORDER ENTRY	1-800-526-5142

MAX RECOMMENDED OPERATING TEMPERATURE: 105°C[221°F] MAX

VOLTAGE RATING: 300 V MAX

CIRCULAR MIL AREA: 1.04-2.62mm² [2,050-5,180] STRANDED OR SOLID

THIS DRAWING IS A CONTROLLED DOCUMENT.

DIMENSIONS: mm [INCHES]

TOLERANCES UNLESS OTHERWISE SPECIFIED:
0 PLC ± -
1 PLC ± -
2 PLC ± -
3 PLC ± 0.127[.005]
4 PLC ± -
ANGLES ± -

MATERIAL (4)

FINISH (7)

DWN	JR RUTH	13JAN10
CHK	T MICHIELUTTI	13JAN10
APVD	T MICHIELUTTI	13JAN10
PRODUCT SPEC	UL 486 A-B	
APPLICATION SPEC	114-2157	
WEIGHT	-	

TE Connectivity

NAME: TERMINAL, RING TONGUE, PIDG
WIRE SIZE: 16-14 AWG

SIZE	CAGE CODE	DRAWING NO	RESTRICTED TO
A3	00779	C-324159	-

CUSTOMER DRAWING | SCALE 5:1 | SHEET 1 OF 1 | REV D4