THIS DRAWING IS UNPUBLISHED. RELEASED FOR PUBLICATION 2011
© COPYRIGHT 2011 Tyco Electronics AMP GmbH ALL RIGHTS RESERVED.

LOC	DIST
A1	–

REVISIONS

P	LTR	DESCRIPTION	DATE	DWN	APVD
	A	NEW DRAWING	07JUN2011	GP	GM
	A1	ECR-12-010251	13JUN2012	GP	GM
	A2	ECR-11-011935	11AUG2015	GP	KR
	A3	ECR-15-018256	16DEC2015	GP	KR

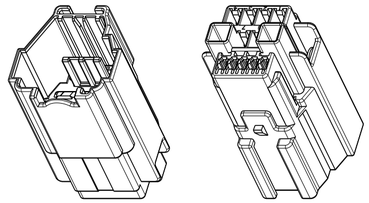

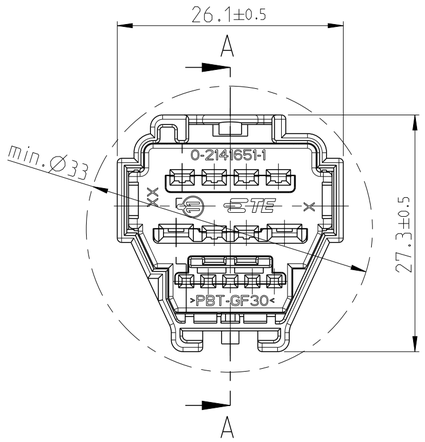

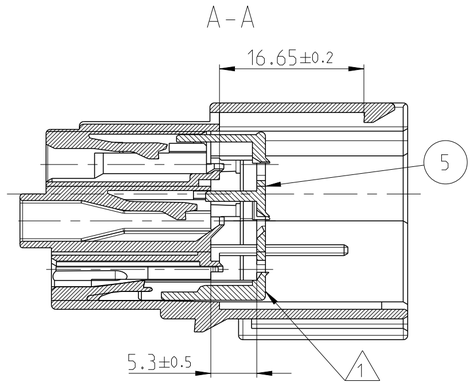

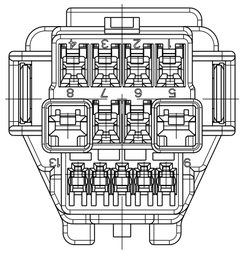

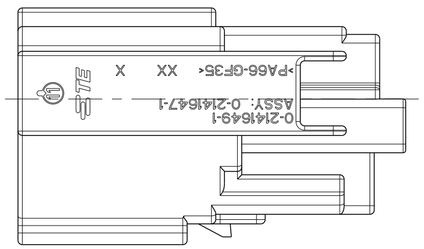

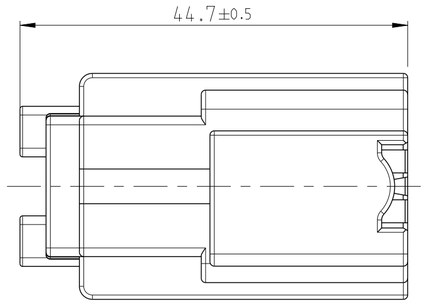

0-2141647-1
CODING A / BLACK

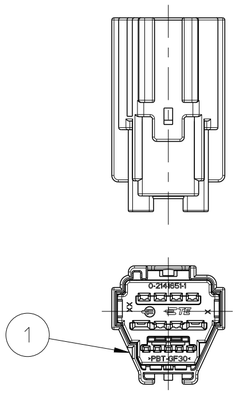

0-2141647-2
CODING B / GREY

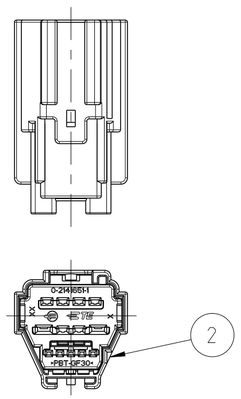

1:1

0-2141647-3
CODING A / BLACK
CLIPING FEATURE TURNED 180 DEGREE

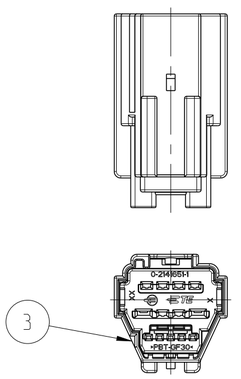

0-2141647-4
CODING B / GREY
CLIPING FEATURE TURNED 180 DEGREE

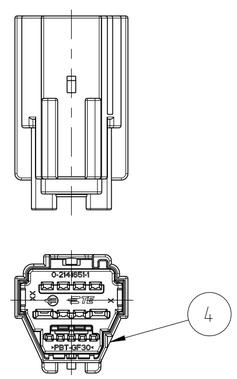

APPLICABLE TERMINALS

DESCRIPTION	PLATING COLOUR	TE CONNECTIVITY COMP. PART NO:	FORD COMP. PART NO:
0.64 GENERATION Y UNSEALED MALE TERMINAL (0.13mm²)	TIN	0-1924275-5	9U5T-14421-ZA
0.64 GENERATION Y UNSEALED MALE TERMINAL (0.35mm²-0.50mm²)	TIN	0-1924275-1	9U5T-14421-BA
0.64 GENERATION Y UNSEALED MALE TERMINAL (0.75mm²)	TIN	0-1924275-2	9U5T-14421-CA
MALE TERMINAL 1.5mm	TIN	YAZAKI PART	97BG-14421-AAB
MALE TERMINAL 1.5mm	TIN	YAZAKI PART	97BG-14421-ABB
MALE TERMINAL 1.5mm	TIN	YAZAKI PART	97BG-14421-ACB
MALE TERMINAL 1.5mm	GOLD	YAZAKI PART	97BG-14421-AFA
MALE TERMINAL 1.5mm	GOLD	YAZAKI PART	97BG-14421-AGA
2.8 UNSEALED MALE TERMINAL	TIN	FCI PART	8U5T-14421-BA
2.8 UNSEALED MALE TERMINAL	TIN	FCI PART	8U5T-14421-CA
2.8 UNSEALED MALE TERMINAL	TIN	FCI PART	8U5T-14421-DA
2.8 UNSEALED MALE TERMINAL	TIN	FCI PART	8U5T-14421-EA

NOTES:
Bemerkungen:

1 DELIVERY CONDITION: SPACER IN PRE-LOCK POSITION
Auslieferungszustand: Spacer in Vorrastellung

2 PACKAING: LOOSE PIECES IN CARDBOARD BOX
Verpackung: Schuettgut im Karton

0-2141647-4	0-2141647-3	0-2141647-2	0-2141647-1	PART NO	DESCRIPTION	COLOUR	ITEM NO
1x	1x	1x	1x	0-2141651-1	13POS. HYBRID SPACER –	RED SIMILAR RAL3000	5
1x				0-2141649-4	13POS. HYBRID TAB HOUSING CODING B	GREY SIMILAR RAL7037	4
	1x			0-2141649-3	13POS. HYBRID TAB HOUSING CODING A	BLACK SIMILAR RAL9011	3
		1x	-	0-2141649-2	13POS. HYBRID TAB HOUSING CODING B	GREY SIMILAR RAL7037	2
			1x	0-2141649-1	13POS. HYBRID TAB HOUSING CODING A	BLACK SIMILAR RAL9011	1
11.60	11.60	11.60	11.60	ASSY NO			
QTY REQD PER ASSY				WEIGHT OF EACH ASSY NO [g]			

PARTS LIST

THIS DRAWING IS A CONTROLLED DOCUMENT.

DIMENSIONS: mm

TOLERANCES UNLESS OTHERWISE SPECIFIED:
0 PLC ±0.30
1 PLC ±0.30
2 PLC ±0.30
3 PLC ±
4 PLC ±
ANGLES ±1°

MATERIAL –
FINISH –

DWN	G.PUCKEL	07JUN2011
CHK	K.ROTH	07JUN2011
APVD	G.MUMPER	08JUN2011
PRODUCT SPEC	–	
APPLICATION SPEC	–	
WEIGHT	–	

TE Connectivity

NAME
13POS. HYBRID TAB HOUSING ASSY
2 x APEX2.8,5 x GENERATION Y
6 x YESC1.5/MX150

SIZE	CAGE CODE	DRAWING NO	RESTRICTED TO
A2	00779	C-2141647	–

CUSTOMER DRAWING | SCALE 2:1 | SHEET 1 OF 1 | REV A3

-1 AS SHOWN
wie gezeichnet