THIS DRAWING IS UNPUBLISHED. RELEASED FOR PUBLICATION -,- .
© COPYRIGHT - BY TYCO ELECTRONICS CORPORATION. ALL RIGHTS RESERVED.

LOC	DIST
AD	00

REVISIONS

P	LTR	DESCRIPTION	DATE	DWN	APVD
	E	REVISED ECO-10-021160	09OCT2010	RC	CW
	F	ECO-11-024491	13DEC11	SY	MQW

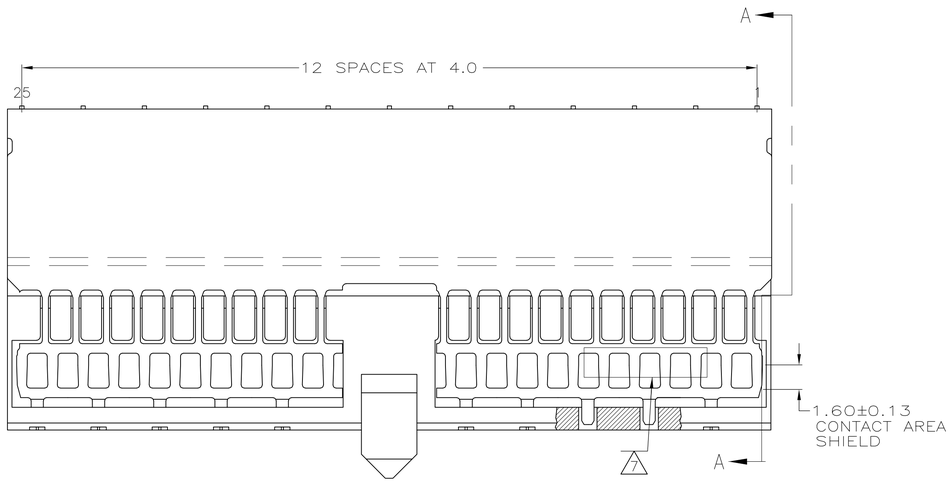

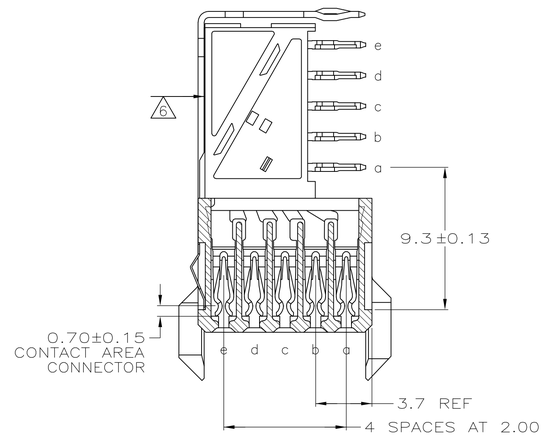

SECTION A–A

1. MATERIAL:
   CONTACT: PHOSPHOR BRONZE.
   HOUSING: GLASS–FILLED POLYESTER.
2. GENERAL PLATING SPECIFICATION: UNDERPLATING (ENTIRE CONTACT): 1.27µm MIN NICKEL AND ACTION PIN: 0.5µm MIN TIN\LEAD.
   FOR PLATING OF MATING SURFACES SEE APPLICABLE SPECIFICATION REFERENCE FOR EACH DASH NUMBER.
3. CONFORMS TO ALL TESTING ACCORDING TO IEC 61076–4–101 PERFORMANCE LEVEL 2.
4. PLATED THROUGH HOLES AT 2mm x 2mm GRID.
5. ROW "f" 13 PLATED THROUGH HOLES FOR UPPER SHIELD.
6. SHIELD MOUNTED ON CONNECTOR WITH DOUBLE SIDED ADHESIVE TAPE.
7. CONNECTOR MARKED WITH PART NUMBER AND DATE CODE.
8. 0.76 um GOLD PLATING ON MATING SURFACES.
9. CONFORMS TO ALL TESTING ACCORDING TO IEC 61076–4–101 PERFORMANCE LEVEL 1.

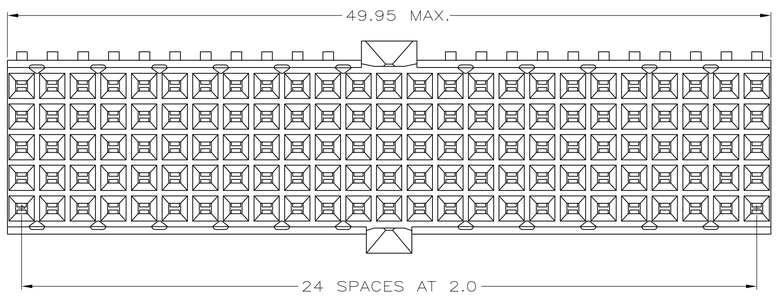

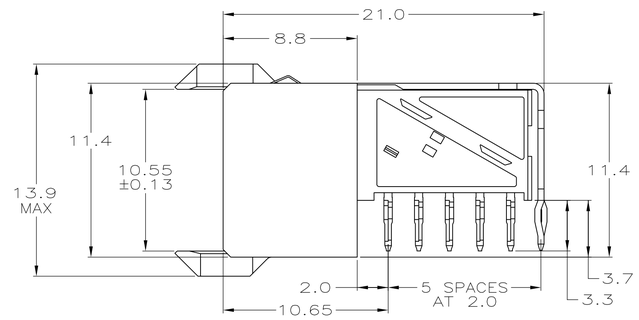

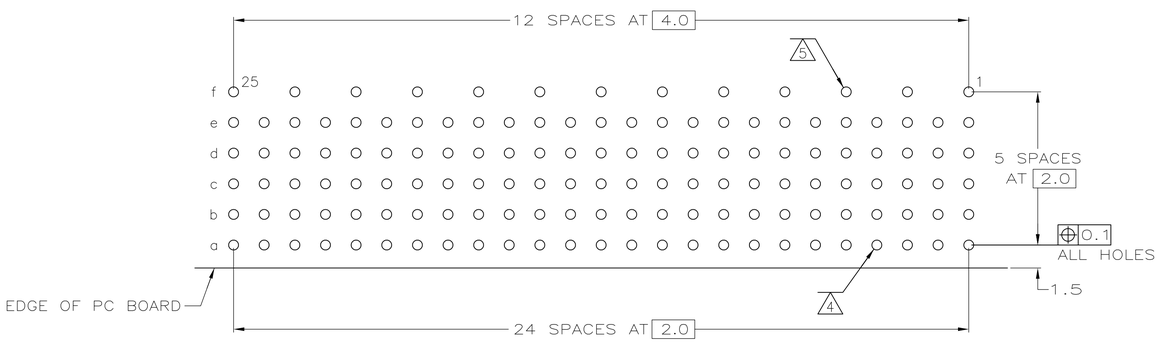

COMPONENT SIDE AS SHOWN
RECOMMENDED PCB HOLE LAYOUT

PCB HOLE DIMENSIONS FOR ACTION PIN
DRILLED HOLE: 0.700±0.025mm
FINISHED HOLE: 0.55 TO 0.65mm
CU–THICKNESS: 0.025 TO 0.050mm
SN/PB–THICKNESS: 0.004 TO 0.010mm

FINISH	PART NUMBER
2 9	646547–4
2 8	3–646547–0
2 3	646547–1

THIS DRAWING IS A CONTROLLED DOCUMENT.

DIMENSIONS: mm

TOLERANCES UNLESS OTHERWISE SPECIFIED:
0 PLC ± –
1 PLC ± –
2 PLC ± 0.1 ±0.2
3 PLC ± –
4 PLC ± –
ANGLES ± –

MATERIAL 1
FINISH SEE TABLE

DWN L. BRINER 4/13/99
CHK G. SKIPPER 4/13/99
APVD G. SKIPPER 4/13/99
PRODUCT SPEC –
APPLICATION SPEC –
WEIGHT –

Tyco Electronics
Tyco Electronics Corporation
Harrisburg, PA 17105–3608

NAME
RECEPTACLE ASSEMBLY, Z–PACK
2mm HM, TYPE A/B
–

SIZE	CAGE CODE	DRAWING NO	RESTRICTED TO
A1	00779	C–646547	–

CUSTOMER DRAWING
SCALE 5:1 SHEET 1 OF 1 REV F