THIS DRAWING IS UNPUBLISHED. RELEASED FOR PUBLICATION -,- .
© COPYRIGHT - By - ALL RIGHTS RESERVED.

LOC	DIST
AA	22

REVISIONS

P	LTR	DESCRIPTION	DATE	DWN	APVD
	D1	REVISED PER ECO-11-005140	28MAR11	RK	HMR

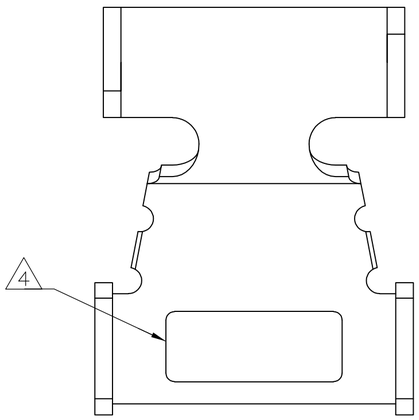

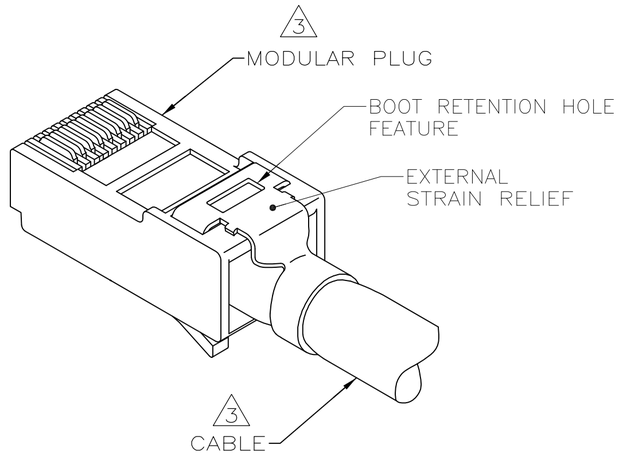

VIEW OF A PROPERLY APPLIED 558527-3 4

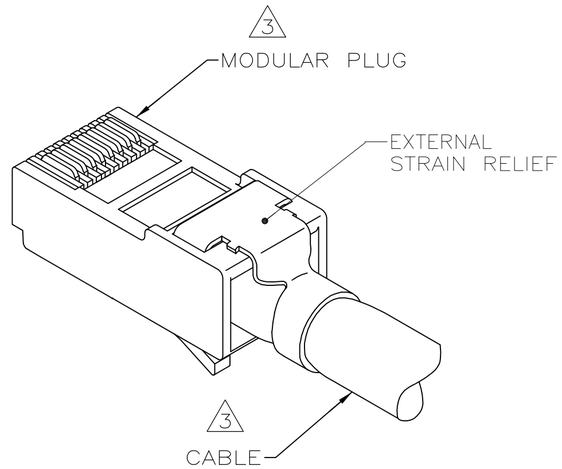

VIEW OF A PROPERLY APPLIED 558527-1

1. ALL DIMENSIONS ARE MAXIMUM UNLESS OTHERWISE SPECIFIED.
2. MATERIAL: BRIGHT PURE TIN PLATED BRASS.
3. MODULAR PLUG AND CABLE FURNISHED BY CUSTOMER.
4. 558527-3 HAS A 2.03 x 5.08 [.080 x .200] RECTANGULAR HOLE FOR RETENTION OF AMP MODULAR PLUG BOOT.
5. THESE EXTERNAL STRAIN RELIEF ACCESSORIES CAN BE UTILIZED ON ANY AMP BRAND 8 POSITION OR 10 POSITION MODULAR PLUG AS SHOWN.

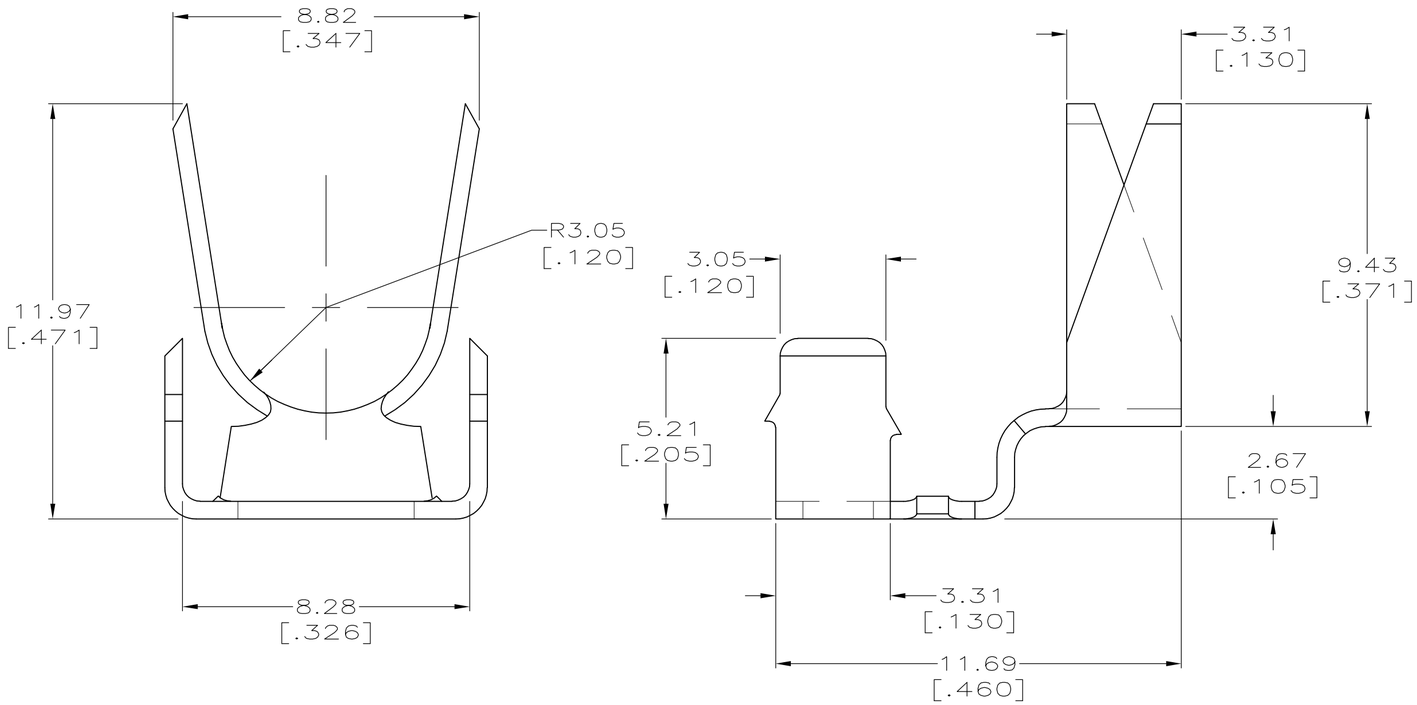

LEAD FREE

4	558527-3
WITHOUT HOLE	558527-1
DESCRIPTION	PART NO.

THIS DRAWING IS A CONTROLLED DOCUMENT.

DIMENSIONS: mm [INCHES]

TOLERANCES UNLESS OTHERWISE SPECIFIED:
0 PLC ± -
1 PLC ± -
2 PLC ± - 1
3 PLC ± -
4 PLC ± -
ANGLES ± -

MATERIAL 2
FINISH 2

DWN G. GARRETT 9-20-95
CHK C. WHITT 10-5-95
APVD E. LAURER 10-12-95
PRODUCT SPEC N/A
APPLICATION SPEC 408-4167
WEIGHT .615 grams

TE Connectivity

NAME STRAIN RELIEF, EXTERNAL, MODULAR PLUG, 8 OR 10 POSITION

SIZE	CAGE CODE	DRAWING NO	RESTRICTED TO
A2	00779	C-558527	—

CUSTOMER DRAWING | SCALE 8:1 | SHEET 1 OF 1 | REV D1

558527

1471-9 (3/11)