THIS DRAWING IS UNPUBLISHED. RELEASED FOR PUBLICATION -,- .
© COPYRIGHT - By - ALL RIGHTS RESERVED.

LOC	DIST
GP	00

REVISIONS

P	LTR	DESCRIPTION	DATE	DWN	APVD
	A1	REVISED PER ECO-11-004835	11MAR11	RK	HMR

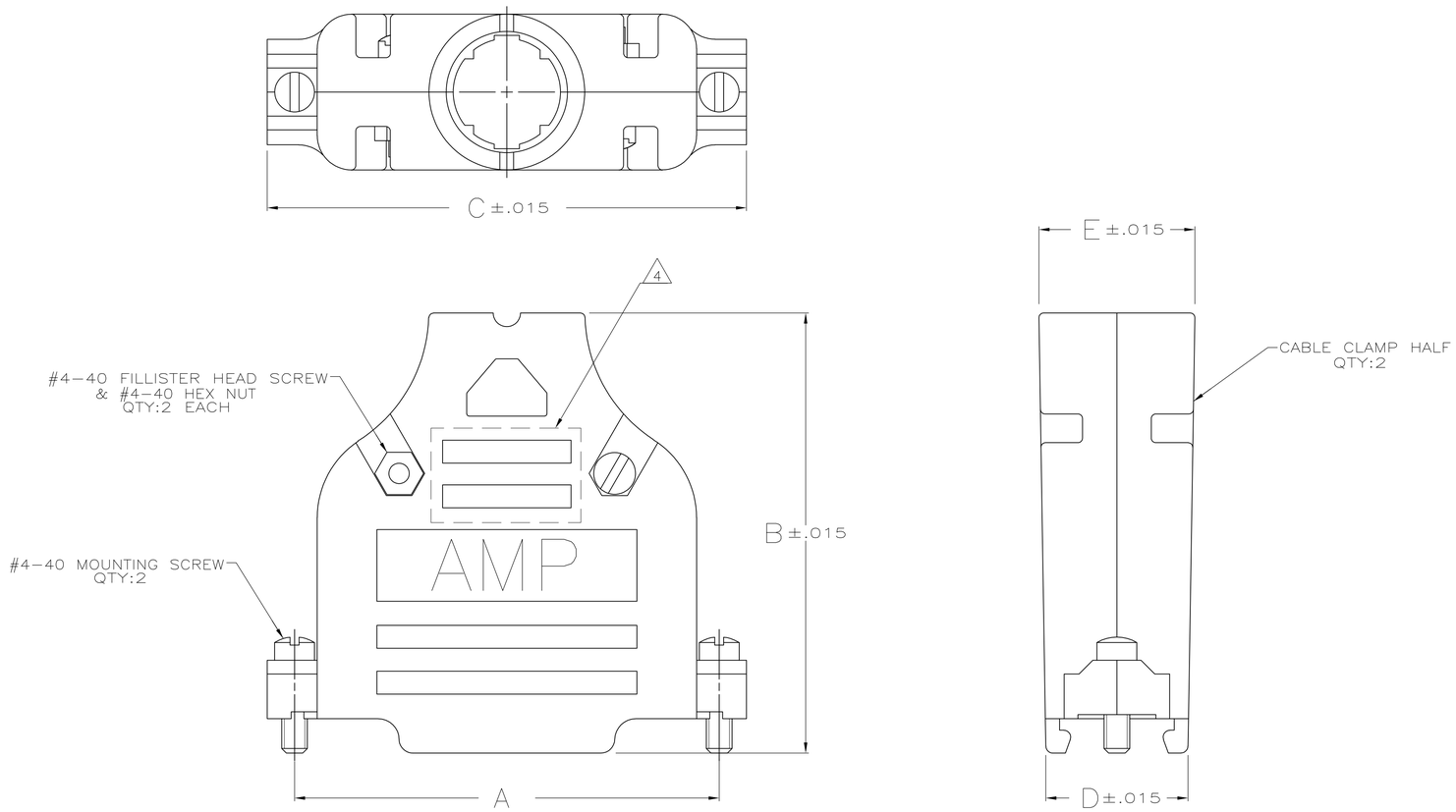

1. PARTS PACKAGED UNASSEMBLED AS A UNIT KIT.
2. CABLE CLAMP HALVES: BLACK ABS MOLDING COMPOUND, FILLISTER HEAD SCREWS, HEX NUTS & MOUNTING SCREWS: STEEL PER ASTM A108, GROMMETS: FLEXIBLE PVC, UL 94V-0 RATED, COLOR: BLACK.
3. CABLE CLAMP HALVES: NICKEL OVER COPPER, FILLISTER HEAD SCREWS, HEX NUTS & MOUNTING SCREWS: ZINC PLATED .000200-.000400 THICK, CLEAR CHROMATE COATING.
4. SIZE 3 CONFIGURATION SHOWN. NUMBER AND SIZE OF SLOTS IN THIS AREA VARIES BY CABLE CLAMP SIZE.

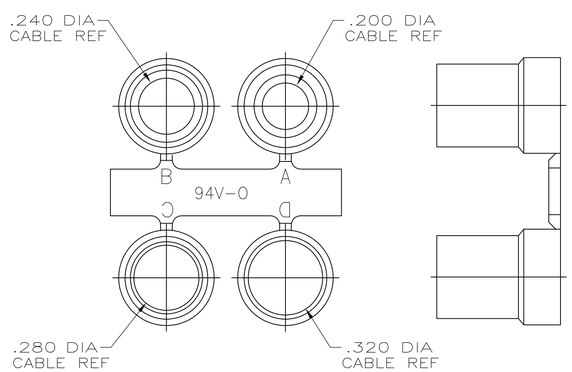

GROMMET ASSORTMENT
FOR SIZES 1 & 2 ONLY

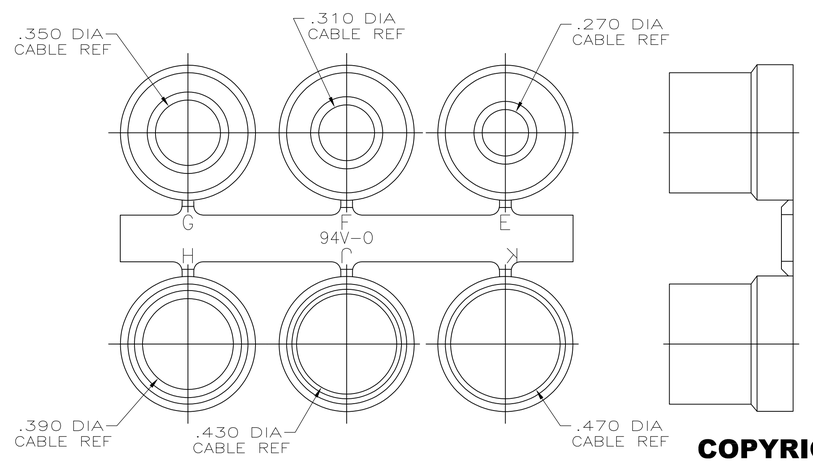

GROMMET ASSORTMENT
FOR SIZES 3, 4 & 5 ONLY

COPYRIGHT 2005
TE CONNECTIVITY CORP
ALL RIGHTS RESERVED

E	D	C	B	A	SIZE	PART NO
.900	.730	2.644	1.920	2.406	5	5748677-5
.800	.620	2.738	1.920	2.500	4	5748677-4
.680	.640	2.090	1.920	1.852	3	5748677-3
.620	.620	1.545	1.910	1.312	2	5748677-2
.570	.630	1.215	1.910	.984	1	5748677-1

THIS DRAWING IS A CONTROLLED DOCUMENT.

DIMENSIONS: INCHES

TOLERANCES UNLESS OTHERWISE SPECIFIED:
0 PLC ± -
1 PLC ± -
2 PLC ± -
3 PLC ± .005
4 PLC ± -
ANGLES ± -

MATERIAL 2
FINISH 3

DWN D. HENNY 8-18-05
CHK C. ROHDE 8-18-05
APVD M. WALMSLEY 8-18-05
PRODUCT SPEC —
APPLICATION SPEC —
WEIGHT —

TE Connectivity

NAME KIT, CABLE CLAMP, 180 DEG EXIT, W/GROMMETS AMPLIMITE SERIES, PLATED PLASTIC
—

SIZE	CAGE CODE	DRAWING NO	RESTRICTED TO
A1	—	C-5748677	—

CUSTOMER DRAWING | SCALE 3:1 | SHEET 1 OF 1 | REV A1

5748677

4805 (3/11)