THIS DRAWING IS UNPUBLISHED. RELEASED FOR PUBLICATION -,- .
© COPYRIGHT - By - ALL RIGHTS RESERVED.

LOC	DIST
AF	50

REVISIONS

P	LTR	DESCRIPTION	DATE	DWN	APVD
	D1	REVISED PER ECO-13-010050	18JUN13	JR	PD

1 CONTINUOUS STRIP ON REELS

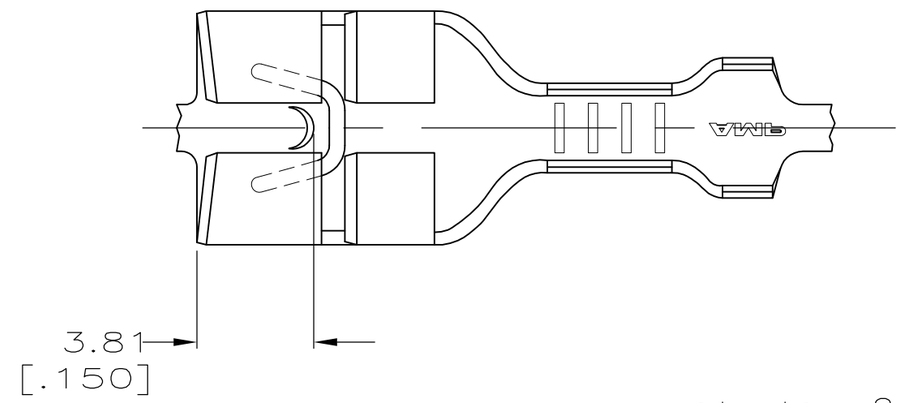

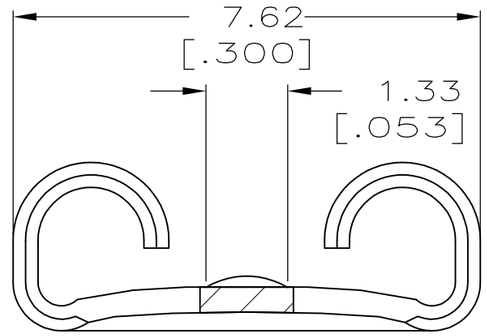

VIEW A–A
SCALE 10:1

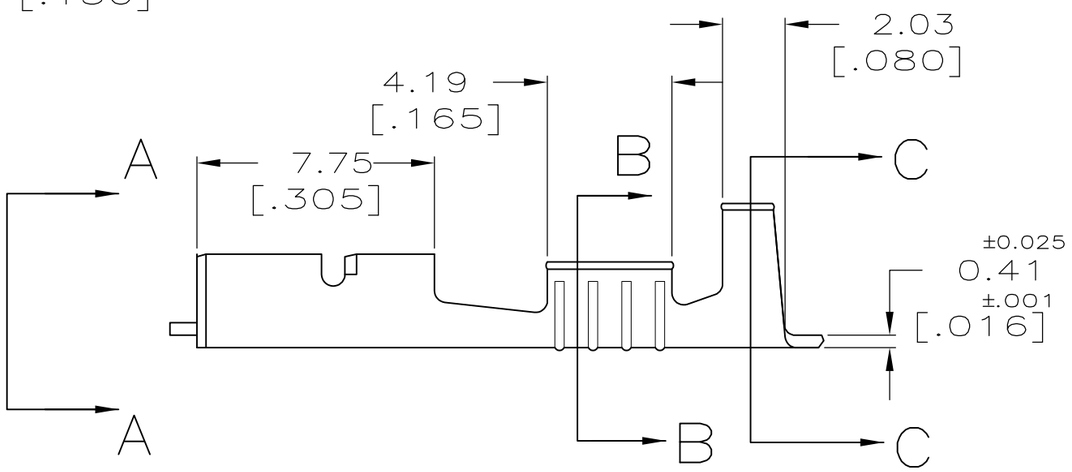

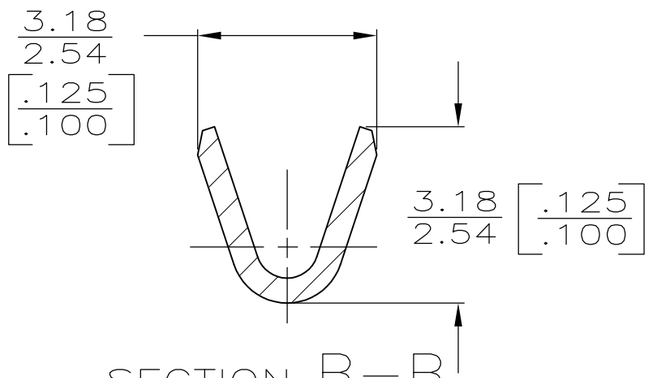

SECTION B–B
SCALE 10:1

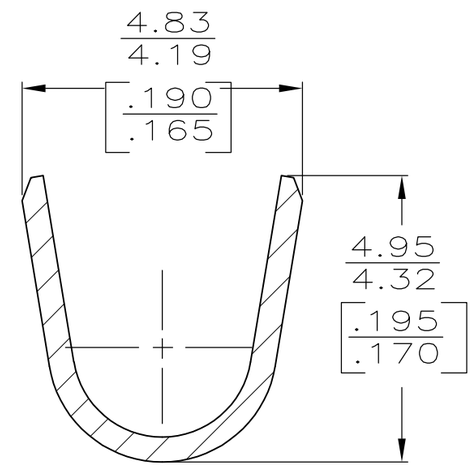

SECTION C–C
SCALE 10:1

INSULATION RANGE	WIRE SIZE	MATING TAB THK ±0.025 [.001]	FINISH	PART NO
2.29–3.30 [.090–.130] DIA	0.3–0.8mm² [22–18] AWG	0.813 [.032]	TIN	63609-2
			–	63609-1

TYPE	WIDTH	STRIP LENGTH ±0.38 ±[.015]	TYPE	WIDTH	±.051 [±.002] HEIGHT	WIRE
F, O, OR OVERLAP	3.30 [.130]	5.59 [.220]	F	2.29 [.090]	1.42 [.056]	0.8mm² [18]
					1.30 [.051]	0.5mm² [20]
					1.24 [.049]	0.3mm² [22]
INSUL BARREL CRIMP			WIRE BARREL CRIMP			

THIS DRAWING IS A CONTROLLED DOCUMENT.

DIMENSIONS: mm [INCHES]

TOLERANCES UNLESS OTHERWISE SPECIFIED:

0 PLC	± –
1 PLC	± –
2 PLC	± 0.25 [.010]
3 PLC	± –
4 PLC	± –
ANGLES	± –

MATERIAL: BRASS

FINISH: SEE TABLE

DWN	JR RUTH	4/3/91
CHK	P FORTNEY	4/3/91
APVD	C MEYERS	4/3/91
PRODUCT SPEC	–	
APPLICATION SPEC	–	
WEIGHT	–	

TE Connectivity

NAME: RECEPTACLE, FASTON, 6.35 [.250] SERIES –

SIZE	CAGE CODE	DRAWING NO	RESTRICTED TO
A3	00779	C-63609	–

CUSTOMER DRAWING

SCALE 5:1 SHEET 1 OF 1 REV D1