DRAWING MADE IN THIRD ANGLE PROJECTION

THIS DRAWING IS UNPUBLISHED. RELEASED FOR PUBLICATION ,19 .
© COPYRIGHT 19 BY AMP INCORPORATED. ALL INTERNATIONAL RIGHTS RESERVED.

LOC	DIST
BD	77

P	F	ZONE	LTR	REVISIONS DESCRIPTION	DATE	APPD
			E	REV PER EC 0020-1053-95	05 JAN 96	RLT
			F	REV PER EC 0420-59-96	20 SEP 96	RT
			G	REV PER EC 0G40-435-98	17 MAR 99	RT

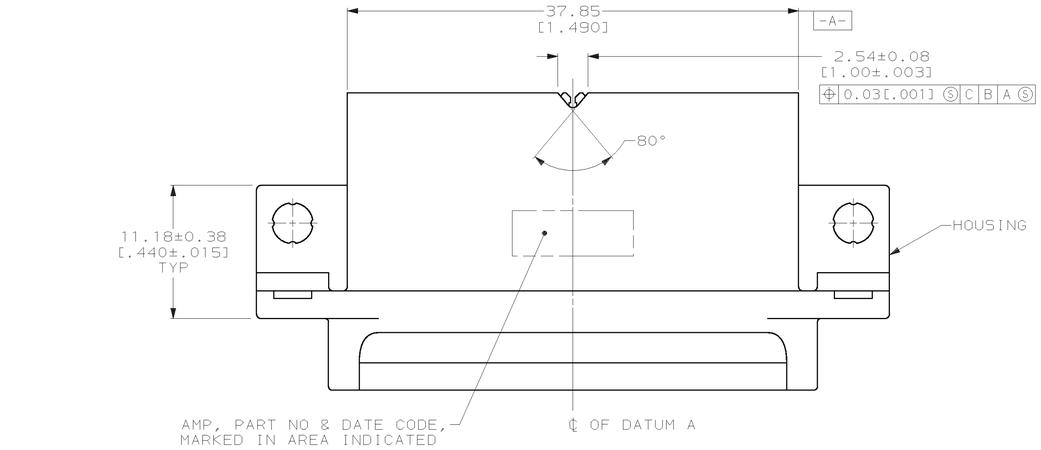

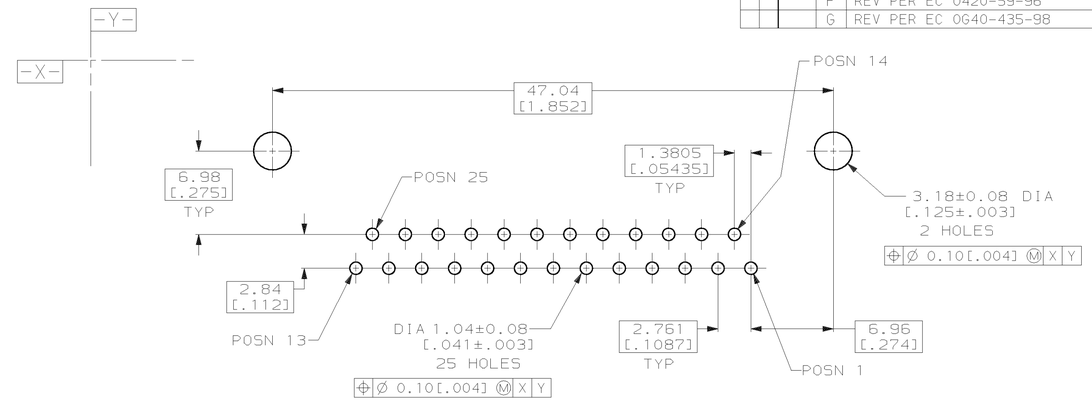

PC BOARD MOUNTING DIMENSIONS

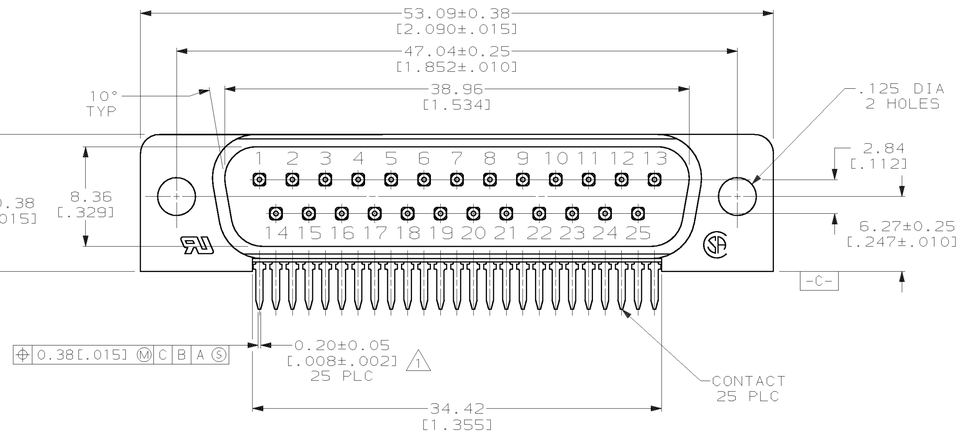

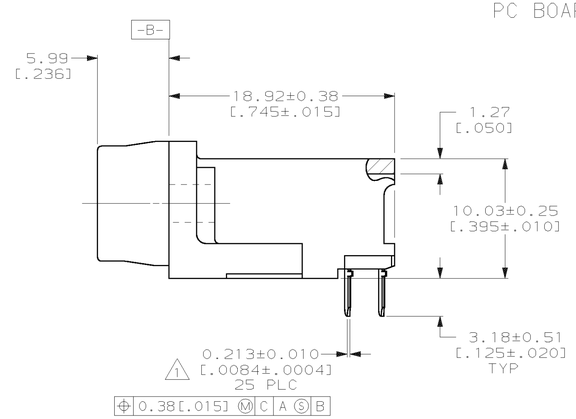

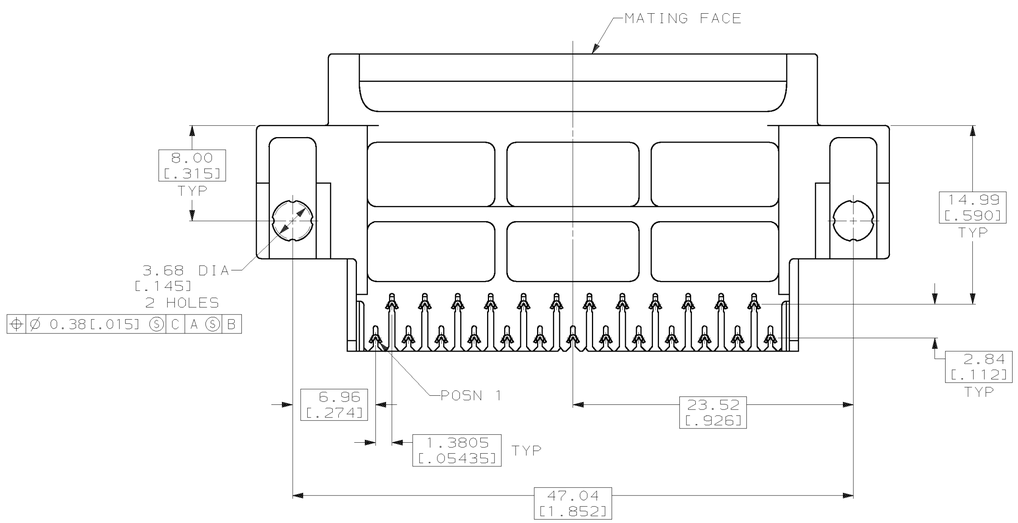

1. POSITION TOLERANCE APPLIES AT TIP ONLY.
2. NYLON OR POLYESTER, UL94V-0, BLACK.
3. BRASS PER MIL-C-50
4. GOLD PLATING PER MIL-G-45204, NICKEL PLATING PER QQ-N-290, TIN PLATING PER MIL-T-10727.
5. GOLD PLATED FOR A LENGTH OF 3.81[.150] MIN FROM MATING END, 0.76µm[.000030] MIN GOLD IN MATED AREA. 3.05µm[.000120] MIN TIN-LEAD FOR A LENGTH OF 3.68[.145] MIN FROM OPPOSITE END, BOTH OVER 1.27µm[.000050] MIN NICKEL.
6. GOLD PLATED FOR A LENGTH OF 3.81[.150] MIN FROM MATING END, GOLD FLASH IN MATED AREA. 3.05µm[.000120] MIN TIN-LEAD FOR A LENGTH OF 3.68[.145] MIN FROM OPPOSITE END, BOTH OVER 1.27µm[.000050] MIN NICKEL.

CONTACT FINISH	PART NO
6	748826-2
5	748826-1

DO NOT SCALE PRINT.
UNLESS SPECIFIED
DIMENSIONS IN mm [INCHES]
TOLERANCES ON :
2 PLC DEC ± 0.13 [.005]
3 PLC DEC ± -
ANGLES ± 2°

MATERIAL
HOUSING: 2
CONTACTS: 3

FINISH 4
CONTACTS: SEE TABLE

DR 02/16/90 S.WELDON
CHK 3-6-90 R.STONE
APPD 3-8-90 J.SWAIN
APPD 3-8-90 C.ROHDE

PRODUCT SPEC 108-1226
APPLICATION SPEC 114-40027
WEIGHT _

AMP INCORPORATED
Harrisburg, Pa. 17105

NAME
PLUG ASSEMBLY, SIZE 3, 25 POSN, ALL PLASTIC, RIGHT ANGLE, .590 SERIES, AMPLIMITE® III

SIZE	CAGE CODE	DRAWING NO
D	00779	748826
SCALE 4:1		SHEET 1 OF 1

CUSTOMER DRAWING