THIS DRAWING IS UNPUBLISHED. RELEASED FOR PUBLICATION -,- .
© COPYRIGHT - BY - ALL RIGHTS RESERVED.

LOC	DIST
IF	—

REVISIONS

P	LTR	DESCRIPTION	DATE	DWN	APVD
	B2	REVISED PER ECO-13-015855	11OCT2013	KH	RH

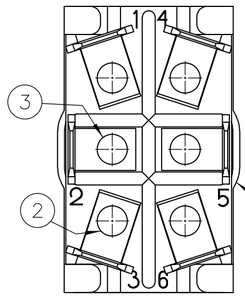

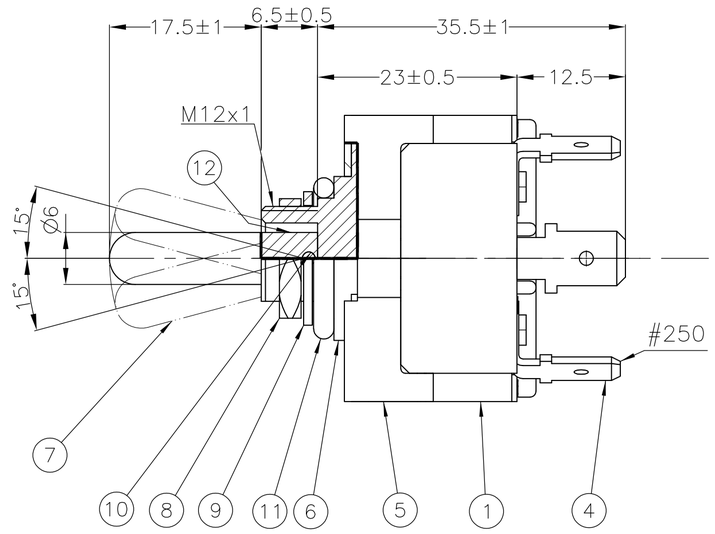

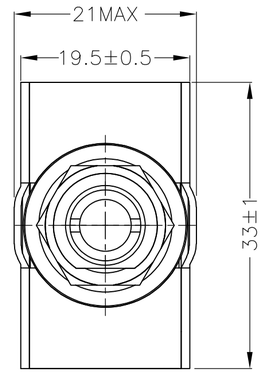

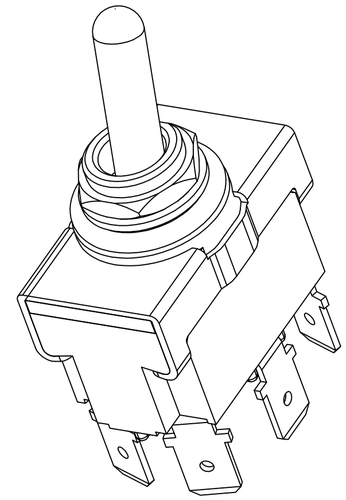

LABEL

SW. Funct.
Model No.
Rating

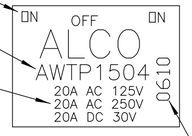

Date Code

Example
0610
Year Month
2006 Oktober

1 OPERATING TEMPERATURE −20°C to +70°C

2 OPERATING FORCE MAX 29,4N

3 ALL MATERIALS AND FINISHES COMPLY WITH ROHS DIRECTIVE

MOUNTING HOLE

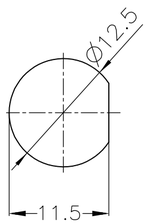

NUT (8)

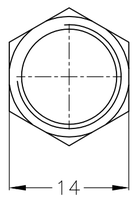

TERMINAL
#250

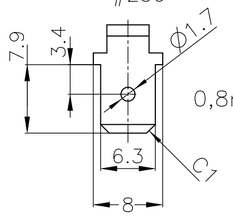

0,8mm thick

Function Chart

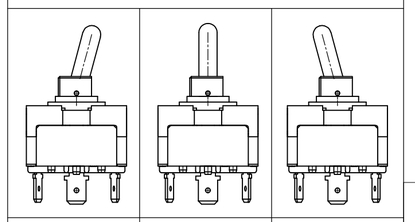

Terminals 1 and 2 4 and 5		Terminals 2 and 3 5 and 6
ON	NONE	ON
ON	OFF	ON
ON	NONE	(ON)
(ON)	OFF	(ON)
ON	OFF	(ON)

(ON) : momentary action
OFF : mechanical position without electrical connection
NONE : no mechanical position

Specifications

Rating	Initial Contact Resistance	Insulation Resistance	Dielectric Strenght	Endurance
AC 125V 20A AC 250V 20A DC 30V 20A	MAX 10 milliohms at DC 2~4V 1A	MIN 1000 M Ohms at DC 500V	AC 1,5kV/1 min (AC 1,8kV/1 sec)	Electrically 20.000 cycles at 20 cycles/min (rated load resistive) Mechanically 40.000 cycles at 20 cycles/min

Materials Chart

PART NO:	PART NAME:	MATERIAL/SURFACE:	OPTIONAL DESCRIPTION
1	Case	PM-EG	
2	F Contact	Silver alloy + C3602BD	
3	Common Contact	C3602BD	
4	Terminal	C2680R	
5	Frame	SPCC	Ep-Fe/Zn4/CM
6	Bushing	Zinc alloy	EP-Zn/Cu5,Ni10b
7	Actuator	C3602BD-F	Ep-Cu/Ni3
8	Nut	C3602BD	Ep-Cu/Ni3b
9	L Washer	SK-5	Ep-Fe/Ni3b
10	Shaft	SUS	
11	Rubber seal	NBR	
12	Insert molded rubber	Silcon rubber	

PART LIST

TOLERANCES UNLESS OTHERWISE SPECIFIED ACCORDING TO ISO 8015 and ISO 2768-f

TE CONNECTIVITY PN	Part
7-6437630-2	AWTN1504
3-6437592-9	AWTP1500
5-6437630-0	AWTR1504
1-6437630-1	AWTS1504
1-6437630-0	AWTT1504

THIS DRAWING IS A CONTROLLED DOCUMENT.

DIMENSIONS: mm

TOLERANCES UNLESS OTHERWISE SPECIFIED:
0 PLC ± -
1 PLC ± -
2 PLC ± -
3 PLC ± -
4 PLC ± -
ANGLES ± -

MATERIAL -
FINISH -

DWN WEIDEN 06.09.2007
CHK -
APVD -
PRODUCT SPEC -
APPLICATION SPEC -
WEIGHT -

TE Connectivity

NAME POWER TOGGLE SWITCH DOUBLE POLE PANEL MOUNTING WATERTIGHT

SIZE A2 | CAGE CODE 00779 | DRAWING NO C-1968501 | RESTRICTED TO -

CUSTOMER DRAWING | SCALE 1:1 | SHEET 1 OF 1 | REV B2

1968501

1471-9 (3/11)