Commercial CCR-33

Miniature DC-18GHz SPDT Switch

Failsafe

The CCR-33 Switch is a broadband, SPDT, electromechanical, coaxial switch designed to switch a microwave signal from a common input to either of two outputs. The characteristic impedance is 50 Ohms. The switches are small with connector spacing compatible with SMA connectors.

The CCR-33 series switch is offered with either a failsafe or latching actuator. This design is compatible with the two most common mounting hole patterns. The CCR-33 series switch is interchangeable with a variety of switches.

Specifications

RF Contacts: Break before make

Actuator

Voltage (VDC) 20°C	12	15	28
Current (mA)	200	160	90

Switching Time: 20 msec max

Connectors: SMA (f)

Weight: 1.65 oz. max

Temperature Range: -40°C to +65°C (Operating)

Shock: MIL-STD-202 Method 213, Condition D (500G Non Operating)

Vibration: MIL-STD-202 Method 214, Condition D (10G RMS Non Operating)

Humidity: Moisture Seal Available

MTBF: 7.3 Million Hours (MIL-HDBK-217F Fixed, 25°C, <1 Cycle per hour)

RF Power Handling

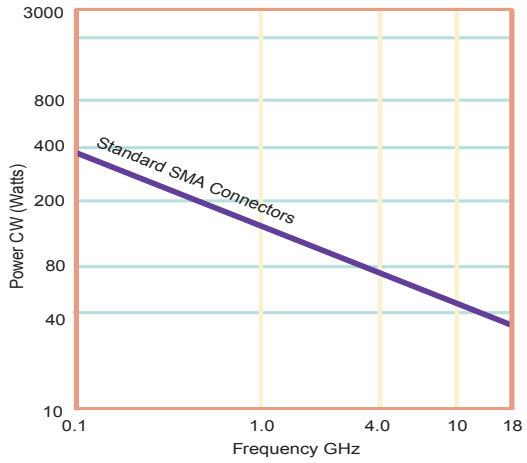

Specifications	DC-6 GHz	6-12 GHz	12-18 GHz
VSWR (max)	1.25:1	1.40:1	1.50:1
Insertion Loss (min)	0.20 dB	0.40 dB	0.50 dB
Isolation (max)	70.0 dB	60.0 dB	60.0 dB

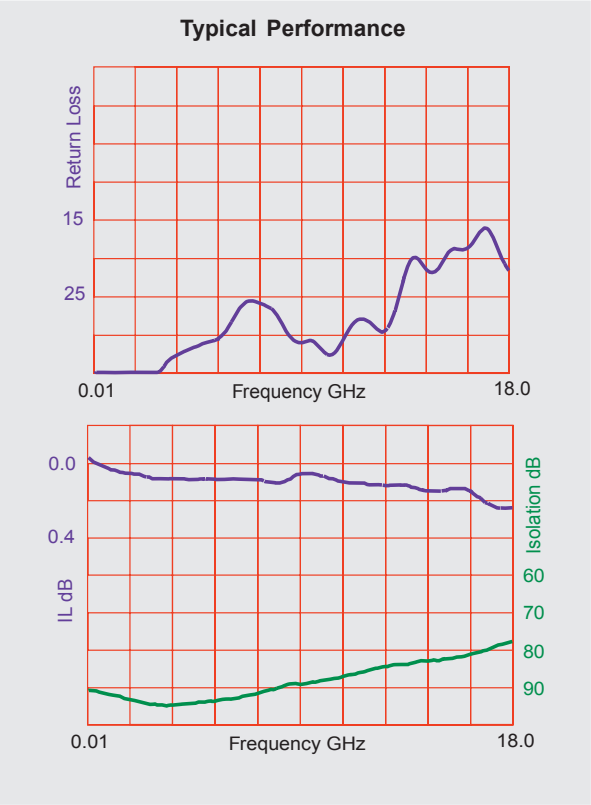

TELEDYNE
COAX SWITCHES

Specifications subject to change without notice.

www.teledynecoax.com
email: coax@teledyne.com

Tel: (800) 351-7368

10/2007

Commercial CCR-33

Miniature DC-18GHz SPDT Switch

Failsafe

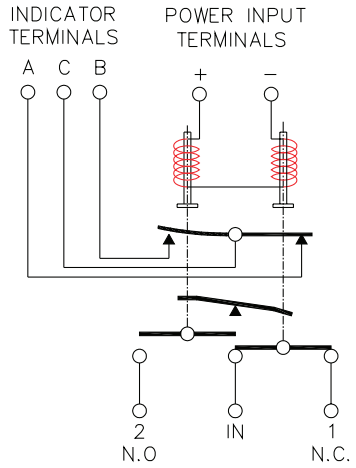

Indicators

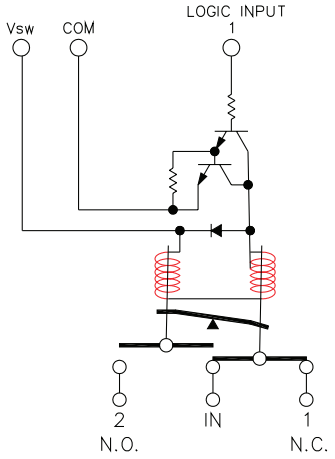

TTL

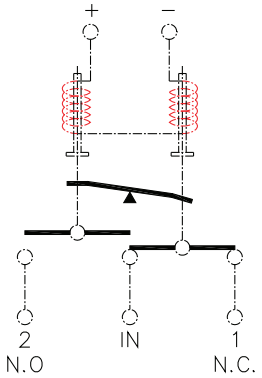

Analog

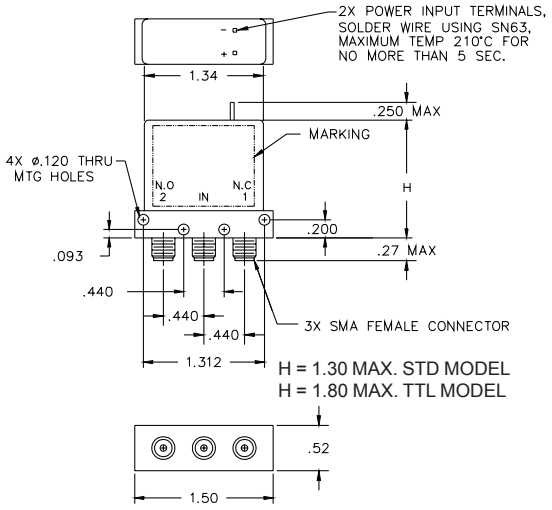

Standard Width Body

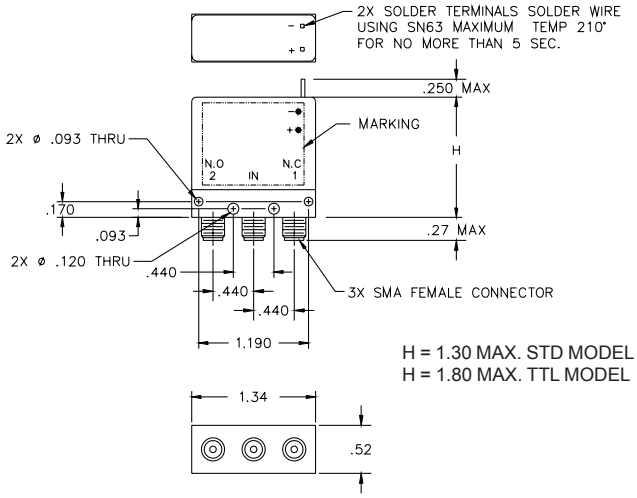

Optional Narrow Width Body

Part Numbering System for CCR-33 (Failsafe)

CCR-33 S 1 O - N

- Series — CCR-33
- Connectors — S
- Actuator Voltage — 1
- Actuator Type — O
- Options — N

Connector
S: SMA Female #

Actuator Voltage
1: 28Vdc Failsafe #
2: 15Vdc Failsafe #
3: 12Vdc Failsafe #

Actuator Type
O: No Indicator Contacts #
C: Indicator Contacts #

Options
T: TTL Drivers with Diodes
N: Narrow Body #
R: Positive + Common

For other options contact Factory

#: Stock item subject to prior sale

TELEDYNE COAX SWITCHES

Specifications subject to change without notice.

www.teledynecoax.com
email: coax@teledyne.com

Tel: (800) 351-7368

10/2007