ITEM NO.	PART NUMBER	DESCRIPTION	QTY.	NOTES
1	TLY-13	NEMA 5-15P	1	black overmold
2	TLY-18	C13	1	black overmold
3	30-00248	Wire, 3C, 18 AWG, UL SJT, 300V, 105°C, 7.75 mm, VW-1, PVC	1	

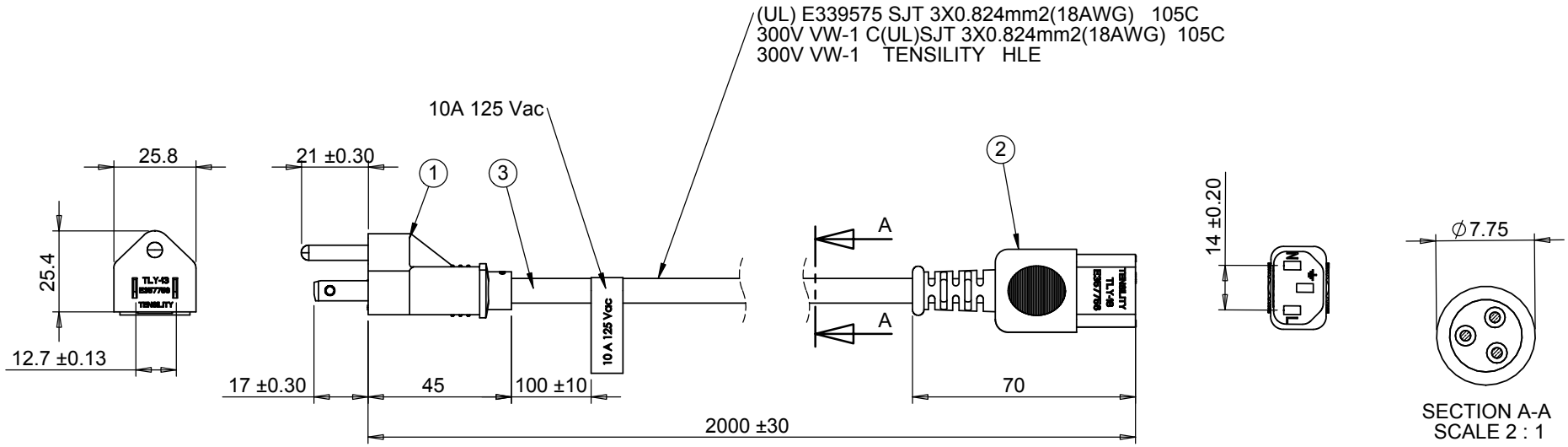

Revision	Date	Description
A	12/19/2012	Initial release

Notes

Rated for 10 A at 125 Vac

RoHS, REACH and Dodd-Frank conflict materials compliant

Function test: no open, no reversed polarity, no short circuit, no INT

TENSILITY

20802 Sockeye Place #130
Bend, OR 97701 USA
tel **541.323.3228** *fax* **541.323.4202**
800 **877.670.7118** **www.tensility.com**

DIMENSIONS ARE IN MILLIMETERS

TOLERANCES:
X: ± 0.5 mm
X.X: ± 0.3 mm
X.XX: ± 0.05 mm

DESCRIPTION:
Ac cord, 2000 mm, U.S, NEMA 5-15P plug, TLY-13 to C13, TLY-18, 18 AWG, SJT wire, 30-00248

SIZE	Part number	
A	**11-00017**	
SCALE:1:2	WEIGHT:	SHEET 1 OF 1

5 4 3 2 1